# WACO TA MARS DRIVE BIKE & PEDESTRIAN CONNECTIVITY IMPROVEMENTS

REGISTERED ACCESSIBILITY SPECIALIST (RAS)
INSPECTION REQUIRED
TDLR NO. X

## PUBLIC WORKS DEPARTMENT

ENGINEERING DIVISION
FOR THE CONSTRUCTION OF PEDESTRIAN
IMPROVEMENTS CONSISTING OF ROADWAY, SIDEWALKS,
RAMPS, PAVEMENT MARKINGS AND STORM DRAINAGE

MAYOR
KYLE DEAVER

CITY COUNCIL
ANDREA J. BAREFIELD - COUNCIL DIST. 1
HECTOR SABIDO - COUNCIL DIST. 2
JOHN KINNAIRD - COUNCIL DIST. 3
DILLON MEEK - COUNCIL DIST. 4
JIM HOLMES - COUNCIL DIST. 5

CITY MANAGER
WILEY STEM III

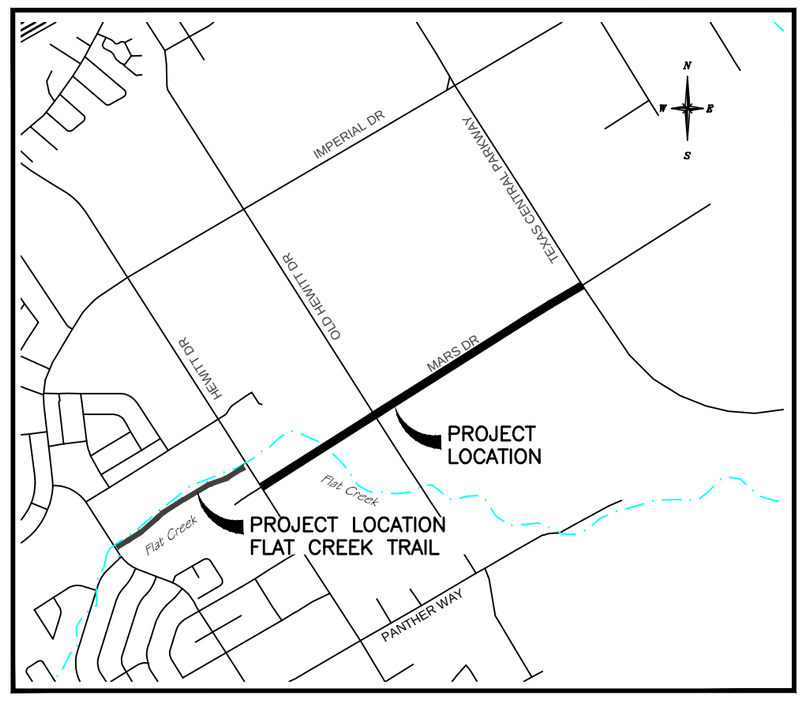


PROJECT ENGINEER (COMPLETE & CORRECT) — DATE

CITY ENGINEER (RECOMMENDED FOR BIDDING) — DATE

PUBLIC WORKS DEPARTMENT DIRECTOR (APPROVED FOR BIDDING) — DATE

## SHEET INDEX


| | |
|---|---|
| 1 | TITLE SHEET & INDEX OF SHEETS |
| 2 | GENERAL NOTES |
| 3 | TYPICAL SECTIONS |
| 4 | SIDEWALK PLAN SHEET 1 OF 5 |
| 5 | SIDEWALK PLAN SHEET 2 OF 5 |
| 6 | SIDEWALK PLAN SHEET 3 OF 5 |
| 7 | SIDEWALK PLAN SHEET 4 OF 5 |
| 8 | SIDEWALK PLAN SHEET 5 OF 5 |
| 9 | FLAT CREEK TRAIL PLAN SHEET 1 OF 3 |
| 10 | FLAT CREEK TRAIL PLAN SHEET 2 OF 3 |
| 11 | FLAT CREEK TRAIL PLAN SHEET 3 OF 3 |
| 12-22 | CITY OF WACO STANDARDS |
| 23 | MISCELLANEOUS DETAILS |
| 24-27 | TXDOT PED 18 DETAILS |
| 28-30 | TXDOT TRAFFIC CONTROL DETAILS |
| 31-42 | TXDOT BARRICADE DETAILS |
| 43-45 | TXDOT PAVEMENT MARKING DETAILS |
| 46 | TXDOT CURB AND GUTTER DETAILS |
| 47-49 | TXDOT SIDEWALK DETIALS |
| 50-51 | TX DOT WACO DISTRICT HAND RAIL DETAIL |
| 52-61 | TXDOT STORM DRAINAGE DETAILS |
| 62-65 | TXDOT SIGN DETAILS |
| 66-75 | TXDOT WACO DISTRICT TA-BMP |
| 76-78 | TXDOT EROSION CONTROL DETAILS |


Texas 811
Know what's below. Call before you dig.

Better Streets Waco

*FOR REVIEW ONLY*

*AUGUST 2019*

SPECIFICATIONS ADOPTED BY THE TEXAS DEPARTMENT OF TRANSPORTATION NOVEMBER 1, 2014, AND SPECIFICATION ITEMS LISTED AS FOLLOWS SHALL GOVERN ON THIS PROJECT: REQUIRED CONTRACT PROVISIONS FOR ALL FEDERAL-AID CONSTRUCTION CONTRACTS (FORM FHWA 1273, MAY 2012)

# GENERAL NOTES

ALL CONSTRUCTION SHALL BE IN ACCORDANCE WITH THE CITY OF WACO STANDARD SPECIFICATIONS FOR CONSTRUCTION (THE CURRENT VERSION) AND APPLICABLE CITY OF WACO MANUAL OF STANDARD DETAILS (WMSD) UNLESS OTHERWISE NOTED.

### CONTRACT ADMINISTRATION
THE CONTRACT IS A WRITTEN AGREEMENT BY WHICH THE CONTRACTOR HAS COMMITTED TO COMPLETE THE SPECIFIC SCOPE OF WORK, IN COMPLIANCE WITH THE DRAWINGS, SPECIFICATIONS, SCHEDULE, AND ALL APPLICABLE LAWS, RULES AND REGULATIONS. COMPENSATION FOR SAID WORK SHALL BE MADE AS DESCRIBED IN THE AGREED-UPON PROPOSAL.

ANY REQUEST FOR CHANGE TO THE DESIGN, SCHEDULE, OR PROJECT COST MUST BE MADE IN WRITING AND APPROVED PRIOR TO IMPLEMENTATION.

### SUBMITTALS
THE CONTRACTOR SHALL SUBMIT, WITHIN 10 DAYS OF THE EFFECTIVE DATE OF THE NOTICE TO PROCEED, THE FOLLOWING:

- THE NAME AND CONTACT INFORMATION OF THE PROJECT SUPERINTENDENT;
- THE NAME AND CONTACT INFORMATION OF THE EMERGENCY CONTACT;
- THE NAME, QUALIFICATIONS, AND CONTACT INFORMATION OF THE DESIGNATED SAFETY REPRESENTATIVE(S);
- THE NAME AND CONTACT INFORMATION FOR THE DESIGNATED PROJECT MANAGER FOR THIS CONTRACT.

### ENVIRONMENTAL AND SAFETY PLANS
THE CONTRACTOR SHALL SUBMIT FOR REVIEW ALL REQUIRED ENVIRONMENTAL AND SAFETY PLANS FOR THE COMPLETION OF THE WORK. THE WORK WILL NOT BE PERMITTED TO BEGIN UNTIL ALL RELATED PLANS HAVE BEEN REVIEWED BY THE APPROPRIATE PARTY(IES).

### TRAFFIC CONTROL PLAN (TCP)
WHEN REQUIRED, THE CONTRACTOR IS RESPONSIBLE FOR SUBMITTING A TRAFFIC CONTROL PLAN FOR REVIEW. THE PLAN SHALL BE BASED UPON APPLICABLE CITY AND STATE REQUIREMENTS AND ESTABLISHED STANDARDS.

THE CONTRACTOR IS RESPONSIBLE FOR MONITORING THE PLAN AS THE WORK PROGRESSES AND SUBMITTING MODIFICATIONS FOR REVIEW AS NEEDED.

THE CONTRACTOR IS ALSO RESPONSIBLE FOR ENSURING THE INSPECTOR IS PROVIDED A COPY OF THE SIGNED PLAN 15 DAYS PRIOR TO BEGINNING WORK.

### TRENCH SAFETY PLANS
WHEN REQUIRED BY THE WORK, THE CONTRACTOR SHALL SUBMIT A TRENCH SAFETY PLAN FOR REVIEW. THE PLAN SHALL INCLUDE THE RECOMMENDED SAFETY PROTECTION MEASURES WITH THE APPROPRIATE LOADING REQUIREMENTS.

THE CONTRACTOR SHALL ENSURE THAT THE PROTECTIVE MEASURES LOCATED ON SITE AND ALL PROCEDURES ON THE PROJECT ARE IN COMPLIANCE WITH ALL ASPECTS OF THE PLAN.

THE CONTRACTOR SHALL COMPLY WITH ALL APPLICABLE RULES AND REGULATIONS.

ALL RELATED DOCUMENTATION WILL BE MADE AVAILABLE TO THE INSPECTOR ON A DAILY BASIS. THE CONTRACTOR SHALL PROVIDE COPIES OF ALL RELATED DOCUMENTATION TO THE OWNER UPON REQUEST.

### CONFINED SPACE PLANS
WHEN REQUIRED BY THE WORK, THE CONTRACTOR SHALL SUBMIT A CONFINED SPACE PLAN FOR REVIEW. THE CONTRACTOR SHALL ENSURE THAT ALL PROCEDURES EMPLOYED ON THE PROJECT ARE IN COMPLIANCE WITH ALL ASPECTS OF THE PLAN.

THE CONTRACTOR SHALL COMPLY WITH ALL APPLICABLE RULES AND REGULATIONS.

ALL RELATED DOCUMENTATION WILL BE MADE AVAILABLE TO THE INSPECTOR ON A DAILY BASIS. THE CONTRACTOR SHALL PROVIDE COPIES OF ALL RELATED DOCUMENTATION TO THE OWNER UPON REQUEST.

### WATER LINES
SHALL HAVE A MINIMUM COVER OF 3.5' BELOW FINISHED STREET GRADE UNLESS OTHERWISE SPECIFIED.

EXISTING FIRE HYDRANTS AND VALVE COVERS THAT ARE TO BE REMOVED SHALL REMAIN THE PROPERTY OF THE CITY OF WACO, AND SHALL BE DELIVERED IN WHOLE TO THE CITY OF WACO STORAGE YARD AT 7801 MONKEY RUN ROAD, WACO, TX, 76708.

### WASTEWATER
IT SHALL BE THE RESPONSIBILITY OF THE CONTRACTOR TO LOCATE EACH SANITARY SEWER SERVICE AFFECTED BY THE PROJECT AND REPLACE EACH WITH AN EQUAL SIZE NEW SERVICE (4" MIN.), COMPLETE WITH 2-WAY CLEANOUT UNLESS OTHERWISE SPECIFIED.

ALL SANITARY SEWER MANHOLES SHOWN TO BE ABANDONED SHALL HAVE THE RING AND COVER REMOVED AND DELIVERED TO THE CITY OF WACO STORAGE YARD AT 4TH AND COLCORD. ALL PIPES INSIDE THE MANHOLE SHALL BE PLUGGED WITH CONCRETE, THE MANHOLE BACKFILLED WITH FLOWABLE FILL, FOLLOWED BY THE APPROPRIATE SURFACE REPLACEMENT. THE TOP OF THE MANHOLE SHALL BE BROKEN DOWN TO A POINT AT LEAST 12" BELOW NATURAL GROUND OR FINISHED PAVEMENT GRADE, OR 12" BELOW LIMITS OF CONSTRUCTION.

### UTILITIES
EXISTING UTILITIES HAVE BEEN SHOWN AS BEST AS CAN BE DETERMINED FROM UTILITY COMPANY RECORDS AND INVESTIGATION. THE UTILITY LINE LOCATIONS SHOWN ON THE PLANS ARE APPROXIMATE ONLY AND ARE FURNISHED AS A GUIDE FOR THE CONTRACTOR. THE CONTRACTOR WILL VERIFY THE LOCATION AND ELEVATION OF ALL UTILITIES BEFORE BEGINNING EXCAVATION.

GAS LINES TO BE RELOCATED OR ADJUSTED BY OTHERS. TELEPHONE LINES TO BE RELOCATED OR ADJUSTED BY OTHERS. UTILITY POLES TO BE RELOCATED BY OTHERS.

THE CONTRACTOR SHALL NOTIFY, (SEE DETAILED LIST BELOW), PRIOR TO STARTING CONSTRUCTION ON ANY STREET IN THE VICINITY OF ANY EXISTING UTILITIES SO THAT ANY ADJUSTMENTS OF EXISTING UTILITIES THAT HAVE NOT PREVIOUSLY BEEN MADE CAN BE MADE PRIOR TO CONSTRUCTION.

### STORM WATER POLLUTION PREVENTION PLAN
THE EROSION CONTROL PLAN PROVIDED IN THE PLAN SET SHALL BE CONSIDERED THE MINIMUM EROSION CONTROL MEASURES FOR THE PROJECT.

IT SHALL BE THE CONTRACTOR'S RESPONSIBILITY "TO DEVELOP AND IMPLEMENT A STORM WATER POLLUTION PREVENTION PLAN IN ACCORDANCE WITH TCEQ GENERAL PERMIT TXR150000 PRIOR TO THE BEGINNING OF CONSTRUCTION ACTIVITY", AS DESCRIBED IN SECTION 1.10: STORM WATER POLLUTION PREVENTION IN THE CITY OF WACO'S 2013 STANDARD SPECIFICATIONS FOR CONSTRUCTION, IF NEEDED. THE CONTRACTOR IS RESPONSIBLE FOR MONITORING THE PLAN AS THE WORK PROGRESSES AND SUBMITTING MODIFICATIONS FOR REVIEW AS NEEDED. THE CONTRACTOR IS ALSO RESPONSIBLE FOR ENSURING THE INSPECTOR IS PROVIDED A COPY OF THE APPROVED AND SIGNED PLAN PRIOR TO BEGINNING WORK.

### STREET CONSTRUCTION
WHERE NEW CURB AND GUTTER IS PLACED NEXT TO EXISTING CURB AND GUTTER, THE GUTTER GRADES SHALL MATCH, AND A $\frac{1}{2}$" EXPANSION JOINT SHALL BE ADDED BETWEEN THE OLD AND NEW CURB AND GUTTER, WITH #5 x24" SMOOTH DOWELS, ONE SIDE WRAPPED, PLACED SIMILARLY TO LONGITUDINAL REINFORCING STEEL.

EXISTING PAVEMENT SHALL BE SAWED TO A SMOOTH STRAIGHT LINE AT THE BEGINNING AND END OF STREET CONSTRUCTION WHERE SHOWN AND AT ALL CONSTRUCTION LIMITS WHERE SHOWN.

IN THE CASE OF A STREET BEING LIME STABILIZED AND CURB & GUTTER BEING REPLACED, OR NEW CURB & GUTTER BEING CONSTRUCTED, EACH EXISTING WATER METER THAT IS NOT AT LEAST 2' BEHIND THE PROPOSED BACK OF CURB SHALL BE RELOCATED TO AT LEAST 2' BEHIND THE PROPOSED BACK OF CURB. EACH NEW WATER SERVICE IN THIS CASE SHALL BE CONSTRUCTED SUCH THAT THE METER IS AT LEAST 2' BEHIND THE PROPOSED BACK OF CURB.

INSTALLATION OF ANY PIPE WITHIN THE RIGHT-OF-WAY PROPOSED OR EXISTING STREET SHALL REQUIRE THE SAME EMBEDMENT AS FOR INSTALLATION IN STREETS.

### STORM SEWER
MEASURE FOR PAYMENT FOR REINFORCED CONCRETE PIPE SHALL EXTEND ONLY TO THE INSIDE FACE OF MANHOLE WALLS AND SHALL EXCLUDE THE INSIDE MANHOLE DIMENSION.

EXISTING R.C.P. SHALL BECOME THE PROPERTY OF THE CONTRACTOR UPON REMOVAL FROM THE PROJECT.

THE RING AND COVER OF EXISTING STORM MANHOLES AND INLETS THAT ARE TO BE REMOVED SHALL REMAIN THE PROPERTY OF THE CITY OF WACO, AND SHALL BE DELIVERED IN WHOLE TO THE CITY OF WACO STORAGE YARD AT 7801 MONKEY RUN ROAD, WACO, TX, 76708.

### SIDEWALKS
WHEN OPERATIONS REQUIRE A SIDEWALK CLOSURE, THE CONTRACTOR SHALL USE "SIDEWALK CLOSED" SIGNS AND TRAFFIC CONTROL DEVICES CONTROLLING PEDESTRIAN FLOWS AS NECESSARY TO ROUTE PEDESTRIANS SAFELY AROUND THE CLOSED SIDEWALK.

THE APPROPRIATE CONTACT PEOPLE FOR UTILITIES ARE AS FOLLOWS:

### UTILITY COMPANIES

**AT&T**
CALVIN PEWITT
(254) 757-7810 (O)
(254) 715-7869 (M)

**ATMOS ENERGY**
RICK SULAK
(254) 722-6566
DUSTIN CUMMINGS
(254) 715-8107

**GRANDE COMMUNICATIONS**
JOHNNY HUTYRA
(254) 235-2072

**CENTURY LINK NATIONAL**
HUGH NIELSEN
(512) 656-4763

**CITY OF WACO WATER DISTRIBUTION AND SANITARY SEWER**
DANA JOHNSTON
(254) 749-7835

**CITY OF WACO OPERATIONS DIVISION**
FRANK BUTLER (STREETS AND DRAINAGE)
(254) 749-8481

**CITY OF WACO TRAFFIC ENGINEERING MANAGER**
ERIC GALLT
(254) 750-6639

**CITY OF WACO TRAFFIC SECTION - ELECTRICAL CONDUIT**
BILLY DEHART
(254) 749-4087

**CITY OF WACO TRANSIT**
JOSEPH DVORSKY
(254) 750-1744

**CITY OF WACO SOLID WASTE**
ROBERT BEDERKA (OPERATIONS MANAGER)
(254) 299-2606

### ONE CALL NOTIFICATION CENTERS

**LONESTAR NOTIFICATION CENTER**
WEBSITE: HTTP://WWW.OCCINC.COM/LOCATIONS/LONE_STAR.ASP
(800) 669-8344

**TEXAS EXCAVATION SAFETY SYSTEM**
WEBSITE: HTTP://WWW.DIGTESS.ORG
(800) DIG-TESS OR (800) 344-8377

**TEXAS ONE CALL SYSTEM**
WEBSITE: HTTP://WWW.TEXASONECALL.COM
(800) 245-4545

### UNDERGROUND PIPELINE (GAS) DAMAGE REPORTING
WEBSITE:
HTTP://WWW.RRC.STATE.TX.US/PROGRAMS/DAMAGEPREVENTION/INDEX.PHP
OPERATIONS CENTER: (800) 460-3030 OR (800) 545-6005

**MCI**
FRANK WALKER
(254) 753-3442

**PAETEC**
TRACY COVINGTON
(512) 934-1469

**ONCOR ELECTRIC**
MELINDA CARSON
(817) 992-8465

**TIME WARNER (SPECTRUM/CHARTER)**
JOHNNY TINDLE
(254) 761-3806
SHANNA BEACH
(254) 761-3885
(254) 217-6954

**CONSOLIDATED COMMUNICATIONS INC.**
BRIAN STORY
(214) 232-7119

| REV. | DESCRIPTION | DATE |
|---|---|---|

THIS DOCUMENT IS RELEASED FOR THE PURPOSE OF INTERIM REVIEW UNDER THE AUTHORITY OF
ANTHONY D. BEACH
64801
NAME LICENSE NO.
AS PER DATE ON DRAWING. IT IS NOT TO BE USED FOR BIDDING OR CONSTRUCTION.
08/07/2019

BSP engineers
F-7587
TBPE REGISTRATION F-7587

CITY OF WACO, TEXAS

WACO TA MARS DRIVE
BIKE & PEDESTRIAN
CONNECTIVITY IMPROVEMENTS

GENERAL NOTES

| SCALE | PROJECT NO. | DRAWING NO. |
|---|---|---|
| N/A | 172409.00 | 2 |
| DATE | SHEET NO. | |
| 08/07/2019 | X of X | |

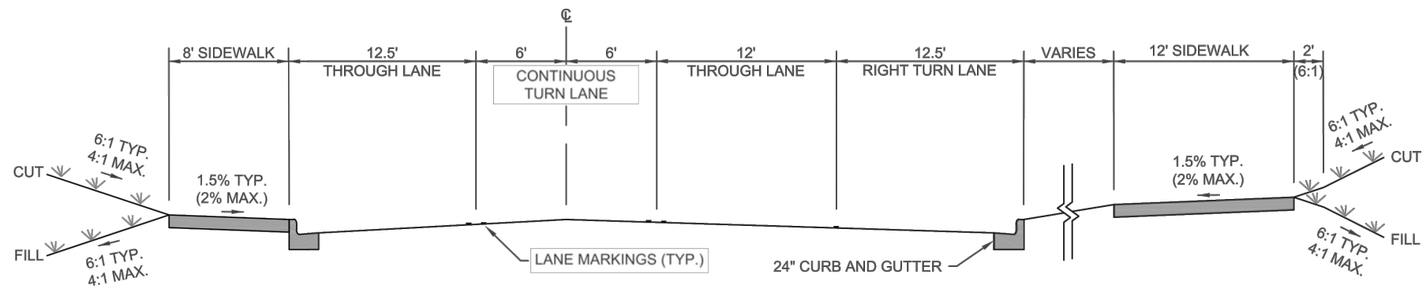


TYPICAL SECTION "A"

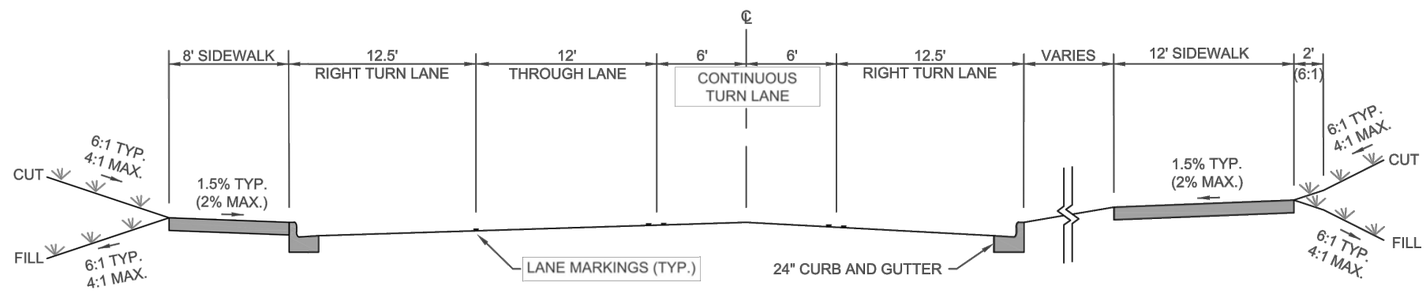


TYPICAL SECTION "B"

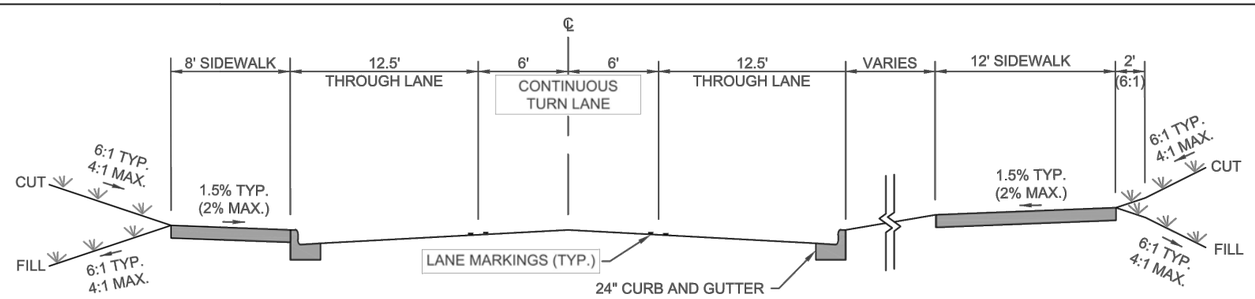


TYPICAL SECTION "C"

| REV. | DESCRIPTION | DATE |
|---|---|---|

THIS DOCUMENT IS RELEASED FOR THE PURPOSE OF INTERIM REVIEW UNDER THE AUTHORITY OF
ANTHONY D. BEACH
64801
NAME LICENSE NO.
AS PER DATE ON DRAWING. IT IS NOT TO BE USED FOR BIDDING OR CONSTRUCTION.
Anthony D. Beach
08/07/2019

BSP engineers
F-7587
TBPE REGISTRATION F-7587

CITY OF WACO, TEXAS

WACO TA MARS DRIVE
BIKE & PEDESTRIAN
CONNECTIVITY IMPROVEMENTS

TYPICAL ROADWAY SECTIONS

| SCALE | PROJECT NO. | DRAWING NO. |
|---|---|---|
| N/A | 172409.00 | 3 |
| DATE | SHEET NO. | |
| 08/07/2019 | X of X | |

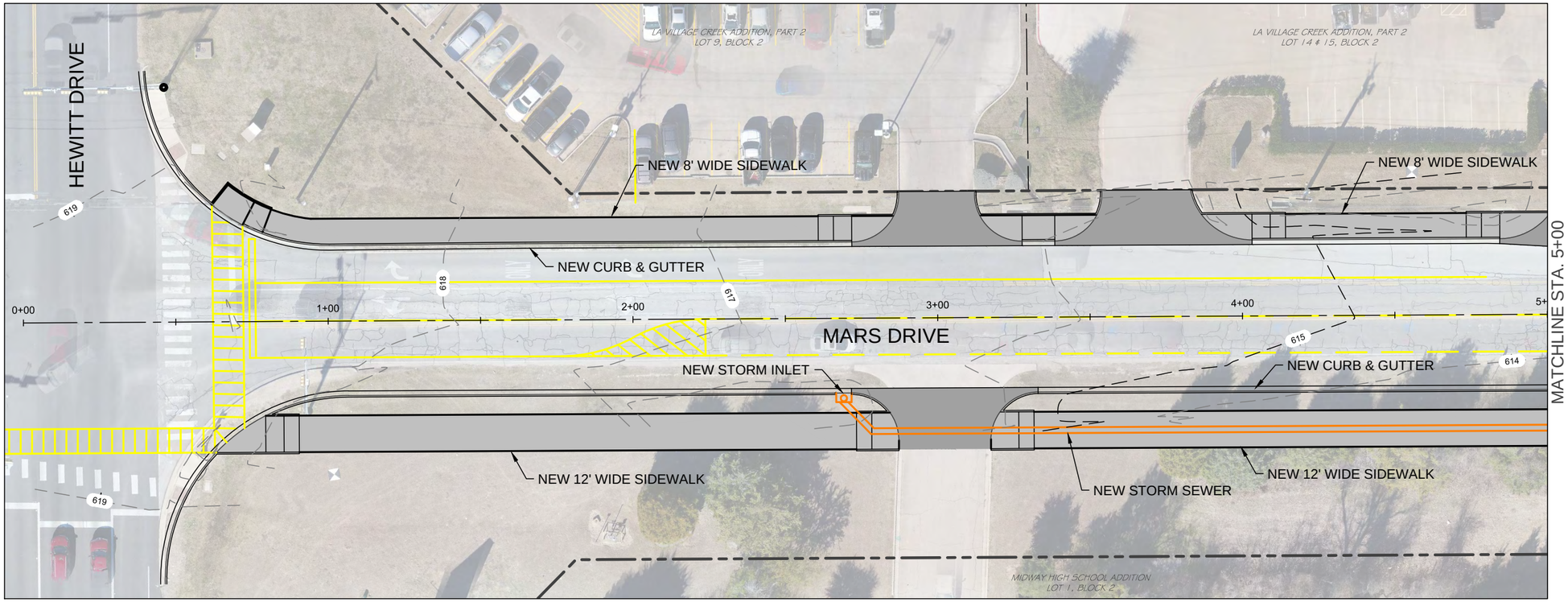


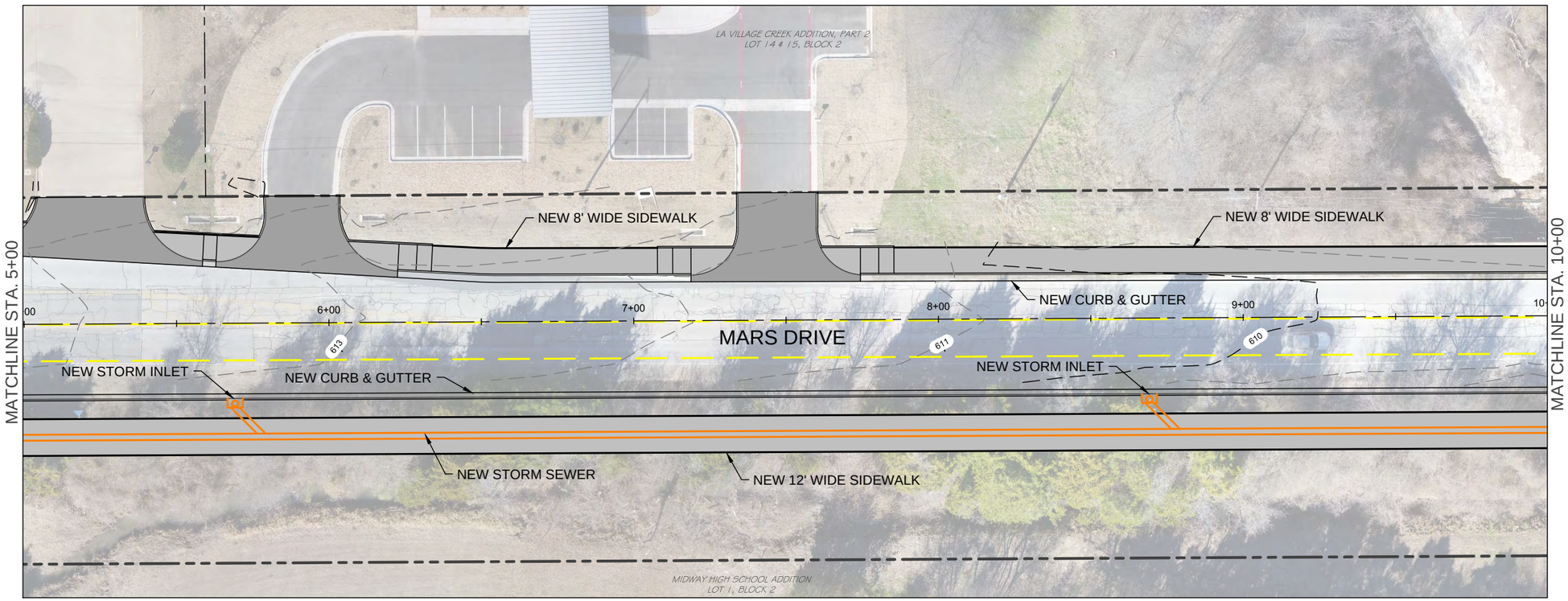


20 10 0 20 40

SCALE IN FEET

LEGEND:

- EXTENTS OF CONCRETE DRIVES
- EXTENTS OF CONCRETE SIDEWALK AND RAMPS
- EXISTING ROW

| REV. | DESCRIPTION | DATE |
|---|---|---|

THIS DOCUMENT IS RELEASED FOR THE PURPOSE OF INTERIM REVIEW UNDER THE AUTHORITY OF
ANTHONY D. BEACH
64801
NAME LICENSE NO.
AS PER DATE ON DRAWING. IT IS NOT TO BE USED FOR BIDDING OR CONSTRUCTION.
08/07/2019

BSP engineers
TBPE REGISTRATION F-7587

CITY OF WACO, TEXAS

WACO TA MARS DRIVE
BIKE & PEDESTRIAN
CONNECTIVITY IMPROVEMENTS

MARS DRIVE
ROADWAY & SIDEWALK PLANS
STA. 0+00-10+00

| SCALE | PROJECT NO. | DRAWING NO. |
|---|---|---|
| N/A | 172409.00 | 4 |
| DATE | SHEET NO. | |
| 08/07/2019 | 1 of 5 | |

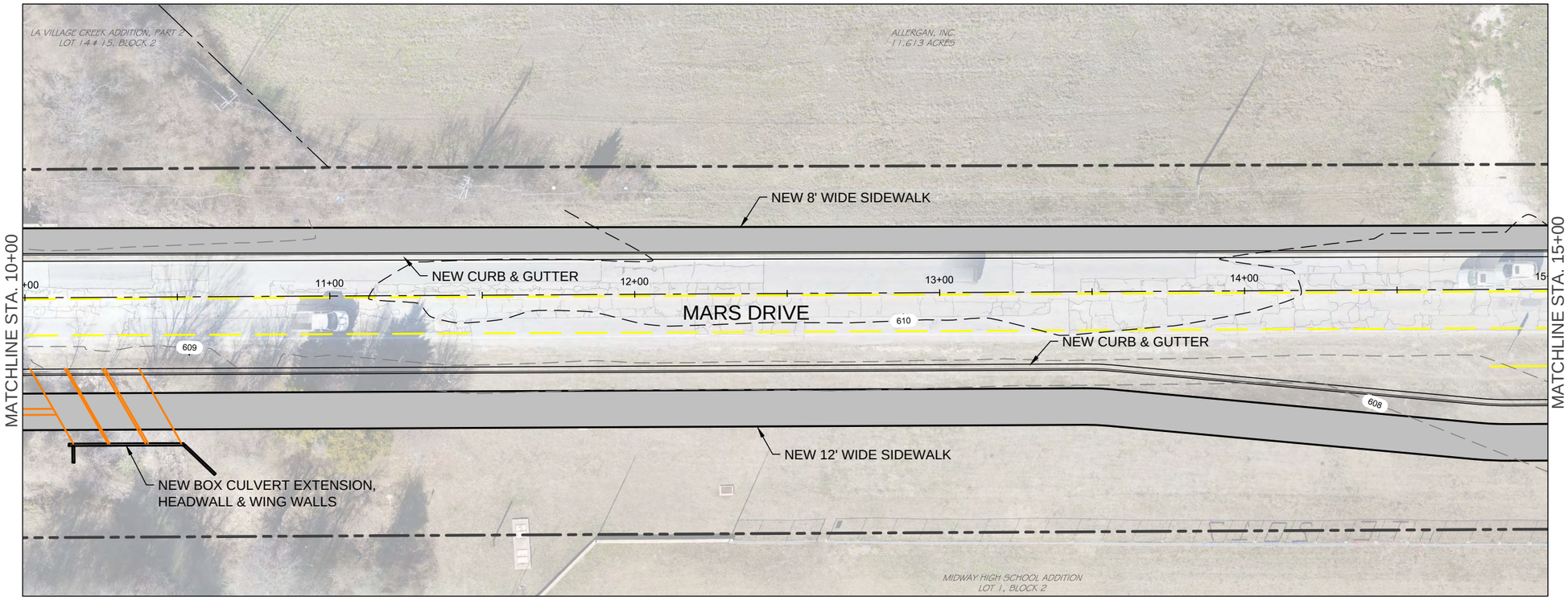


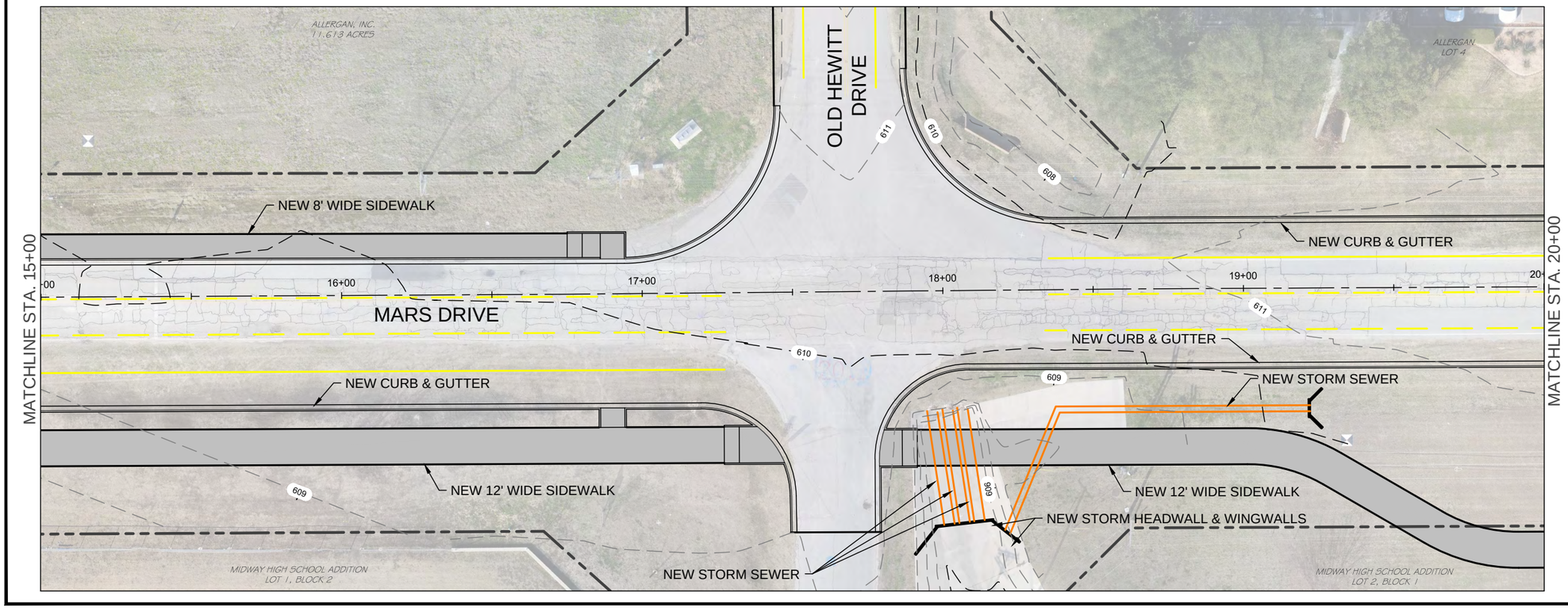


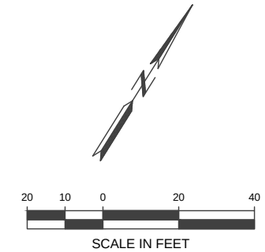


LEGEND:

- EXTENTS OF CONCRETE DRIVES
- EXTENTS OF CONCRETE SIDEWALK AND RAMPS
- EXISTING ROW

| REV. | DESCRIPTION | DATE |
|---|---|---|

THIS DOCUMENT IS RELEASED FOR THE PURPOSE OF INTERIM REVIEW UNDER THE AUTHORITY OF
ANTHONY D. BEACH
64801
NAME LICENSE NO.
AS PER DATE ON DRAWING. IT IS NOT TO BE USED FOR BIDDING OR CONSTRUCTION.
08/07/2019

BSP engineers
TBPE REGISTRATION F-7587

CITY OF WACO, TEXAS

WACO TA MARS DRIVE
BIKE & PEDESTRIAN
CONNECTIVITY IMPROVEMENTS

MARS DRIVE
ROADWAY & SIDEWALK PLANS
STA. 10+00-20+00

| SCALE | PROJECT NO. | DRAWING NO. |
|---|---|---|
| N/A | 172409.00 | 5 |
| DATE | SHEET NO. | |
| 08/07/2019 | 2 of 5 | |

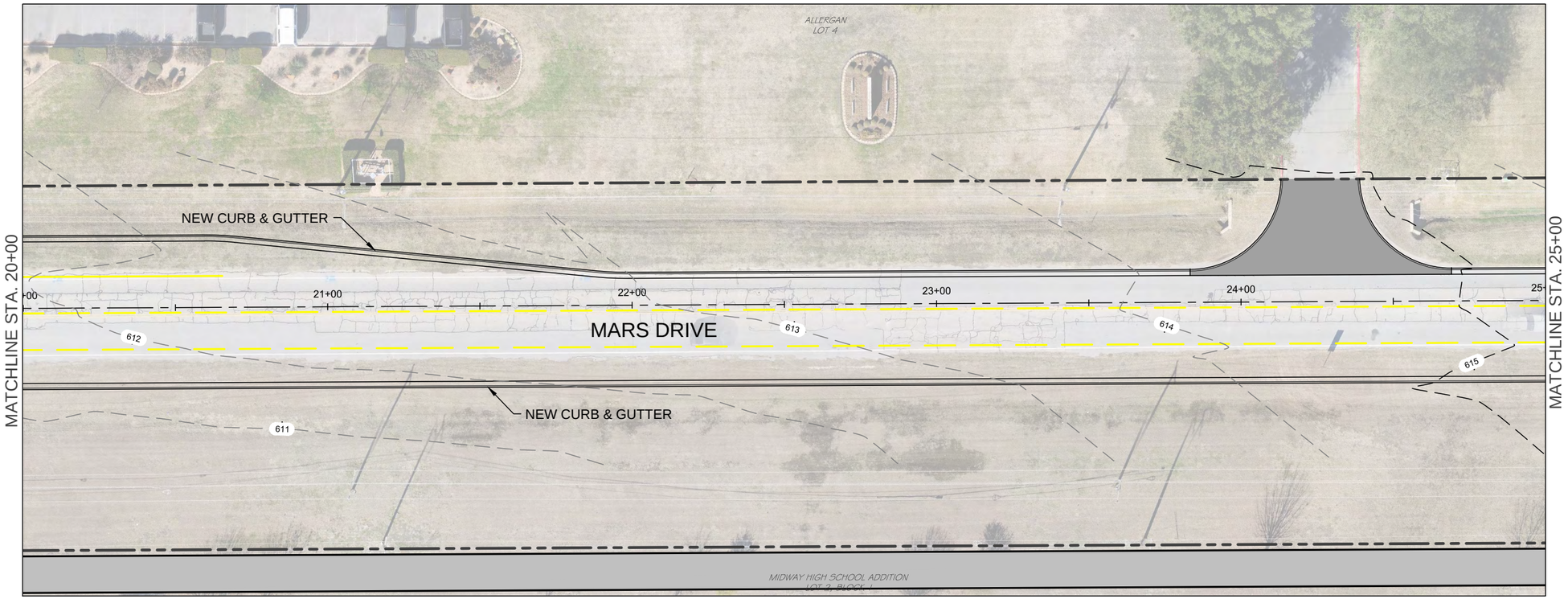


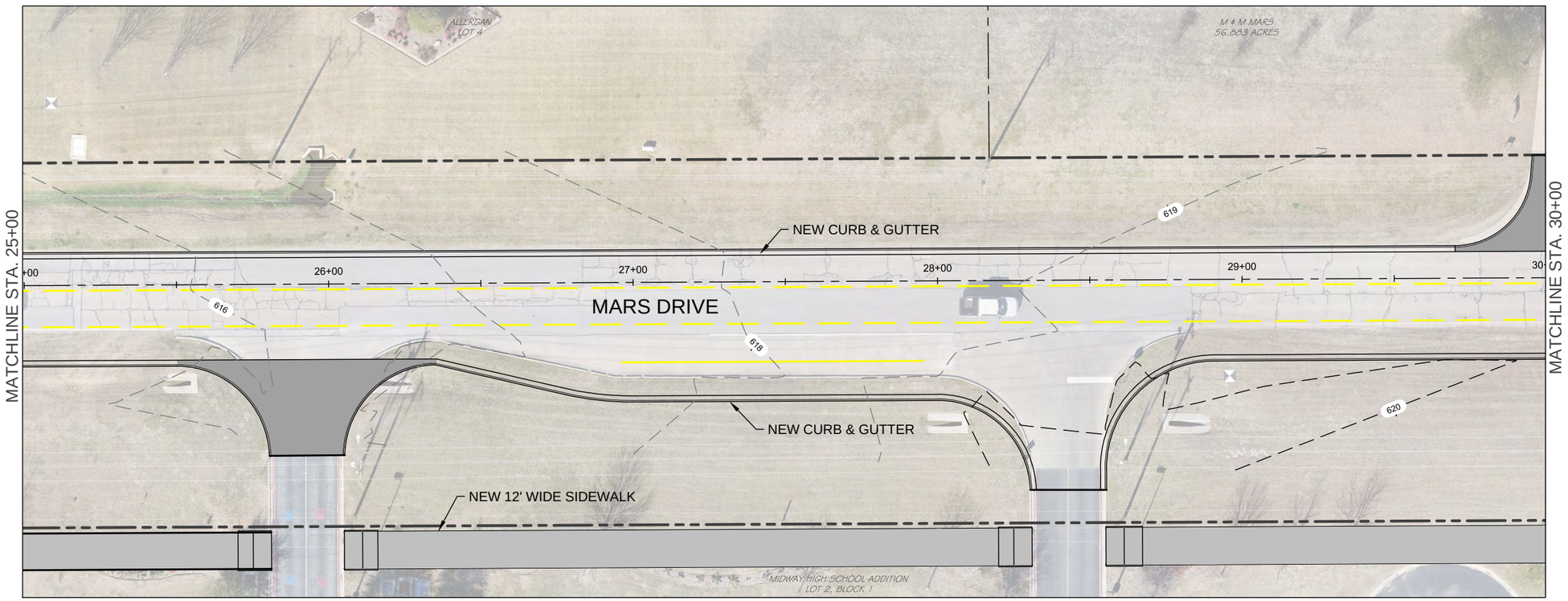


20 10 0 20 40

SCALE IN FEET

LEGEND:

- EXTENTS OF CONCRETE DRIVES
- EXTENTS OF CONCRETE SIDEWALK AND RAMPS
- EXISTING ROW

| REV. | DESCRIPTION | DATE |
|---|---|---|

THIS DOCUMENT IS RELEASED FOR THE PURPOSE OF INTERIM REVIEW UNDER THE AUTHORITY OF
ANTHONY D. BEACH
64801
NAME LICENSE NO.
AS PER DATE ON DRAWING. IT IS NOT TO BE USED FOR BIDDING OR CONSTRUCTION.
08/07/2019

BSP engineers
TBPE REGISTRATION F-7587

CITY OF WACO, TEXAS

WACO TA MARS DRIVE
BIKE & PEDESTRIAN
CONNECTIVITY IMPROVEMENTS

MARS DRIVE
ROADWAY & SIDEWALK PLANS
STA. 20+00-30+00

| SCALE | PROJECT NO. | DRAWING NO. |
|---|---|---|
| N/A | 172409.00 | 6 |
| DATE | SHEET NO. | |
| 08/07/2019 | 3 of 5 | |

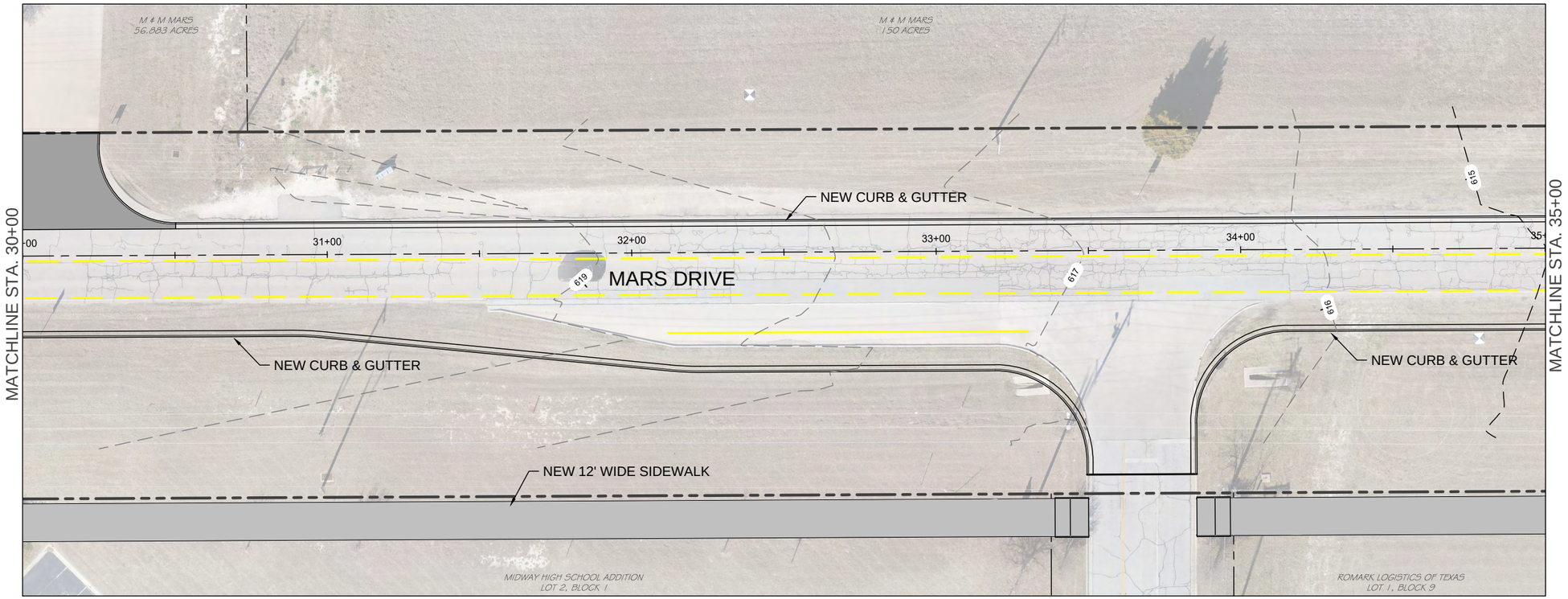


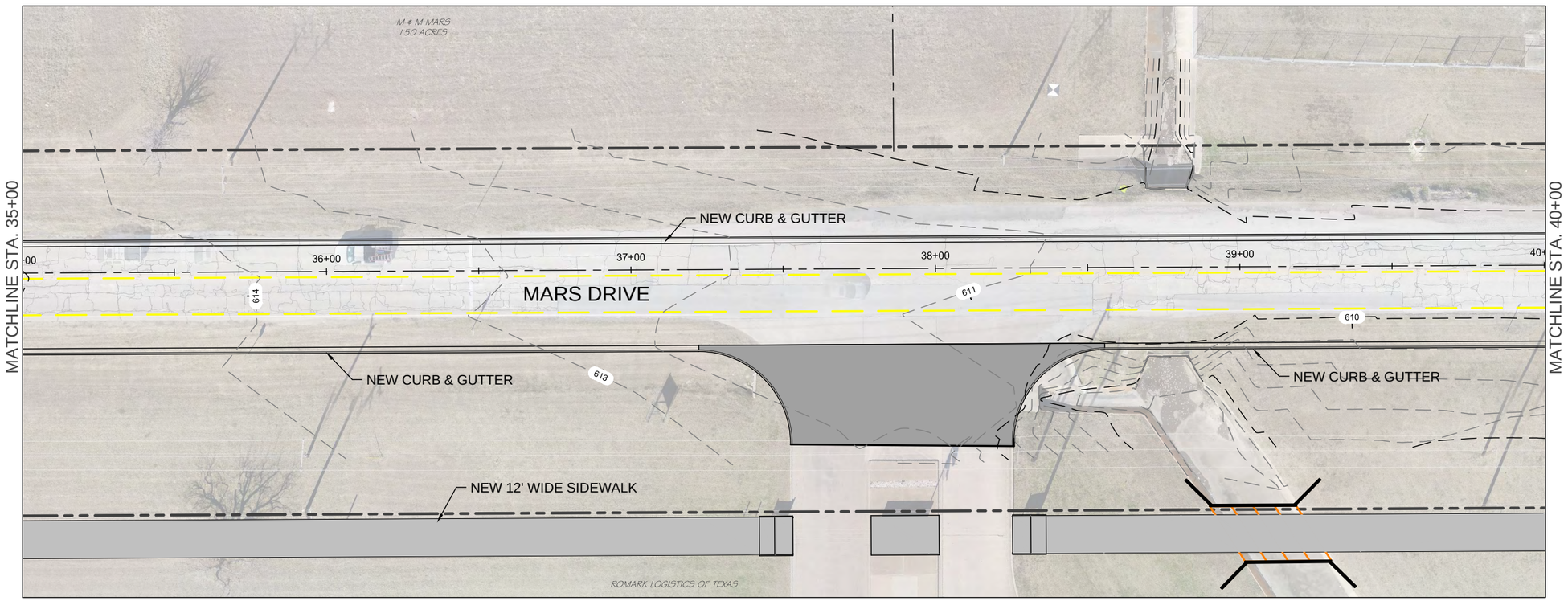


20 10 0 20 40

SCALE IN FEET

LEGEND:

- EXTENTS OF CONCRETE DRIVES
- EXTENTS OF CONCRETE SIDEWALK AND RAMPS
- EXISTING ROW

| REV. | DESCRIPTION | DATE |
|---|---|---|

THIS DOCUMENT IS RELEASED FOR THE PURPOSE OF INTERIM REVIEW UNDER THE AUTHORITY OF
ANTHONY D. BEACH
64801
NAME LICENSE NO.
AS PER DATE ON DRAWING. IT IS NOT TO BE USED FOR BIDDING OR CONSTRUCTION.
Anthony D. Beach
08/07/2019

BSP engineers
F-7587
TBPE REGISTRATION F-7587

CITY OF WACO, TEXAS

WACO TA MARS DRIVE
BIKE & PEDESTRIAN
CONNECTIVITY IMPROVEMENTS

MARS DRIVE
ROADWAY & SIDEWALK PLANS
STA. 30+00-40+00

| SCALE | PROJECT NO. | DRAWING NO. |
|---|---|---|
| N/A | 172409.00 | 7 |
| DATE | SHEET NO. | |
| 08/07/2019 | 4 of 5 | |

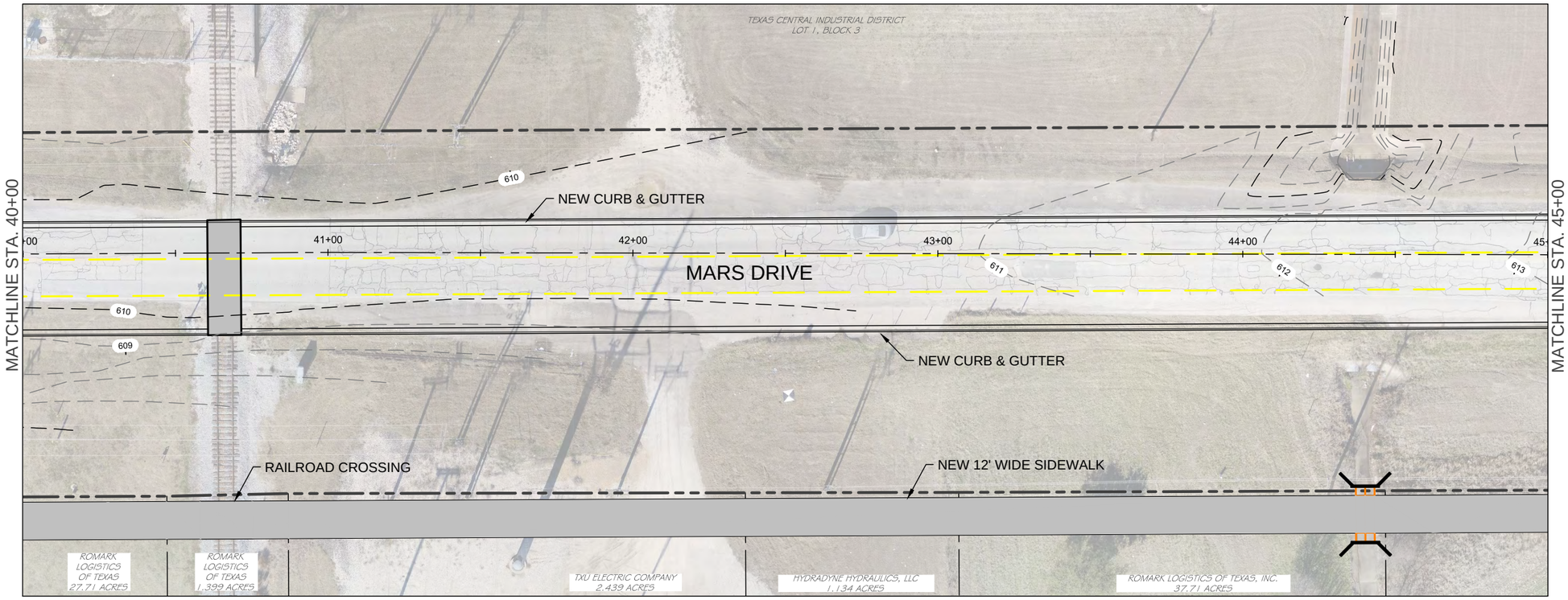


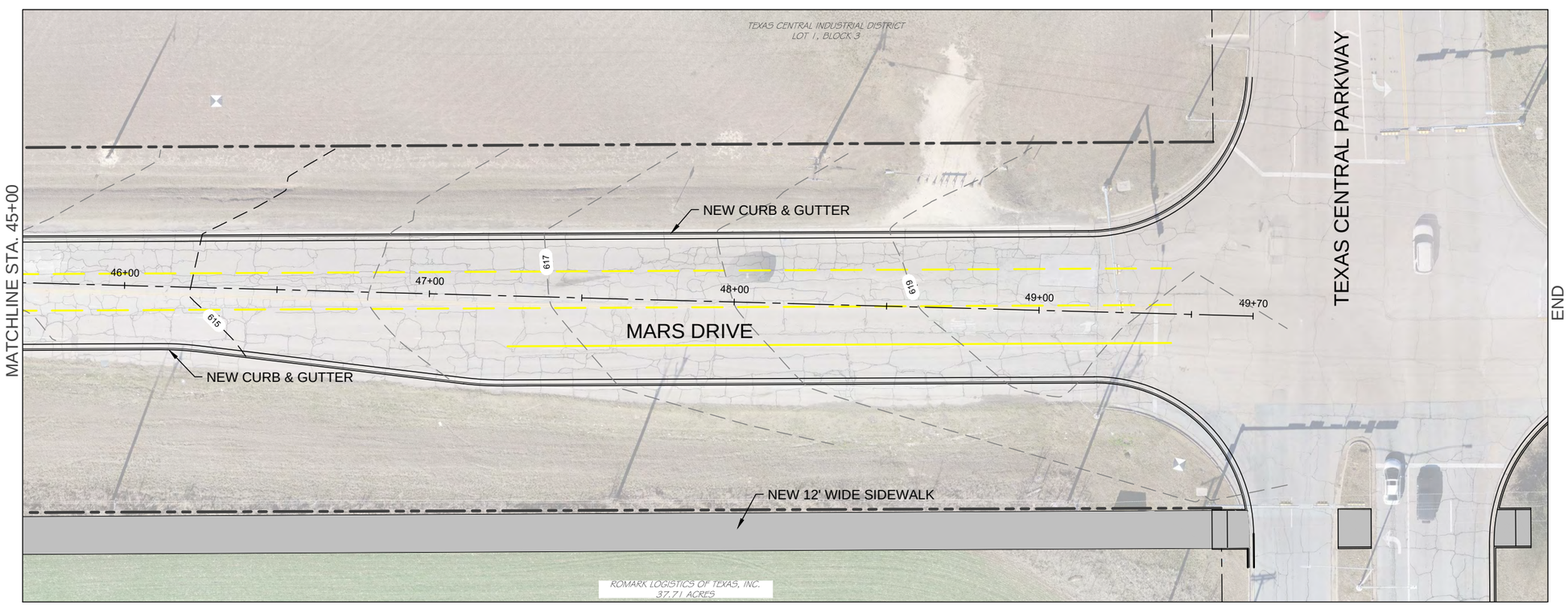


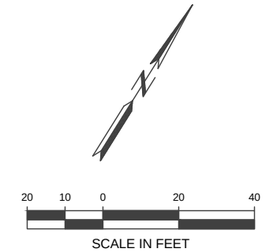


LEGEND:

- EXTENTS OF CONCRETE DRIVES
- EXTENTS OF CONCRETE SIDEWALK AND RAMPS
- EXISTING ROW

| REV. | DESCRIPTION | DATE |
|---|---|---|

THIS DOCUMENT IS RELEASED FOR THE PURPOSE OF INTERIM REVIEW UNDER THE AUTHORITY OF
ANTHONY D. BEACH
64801
NAME LICENSE NO.
AS PER DATE ON DRAWING. IT IS NOT TO BE USED FOR BIDDING OR CONSTRUCTION.
08/07/2019

BSP engineers
TBPE REGISTRATION F-7587

CITY OF WACO, TEXAS

WACO TA MARS DRIVE
BIKE & PEDESTRIAN
CONNECTIVITY IMPROVEMENTS

MARS DRIVE
ROADWAY & SIDEWALK PLANS
STA. 40+00-END

| SCALE | PROJECT NO. | DRAWING NO. |
|---|---|---|
| N/A | 172409.00 | 8 |
| DATE | SHEET NO. | |
| 08/07/2019 | 5 of 5 | |

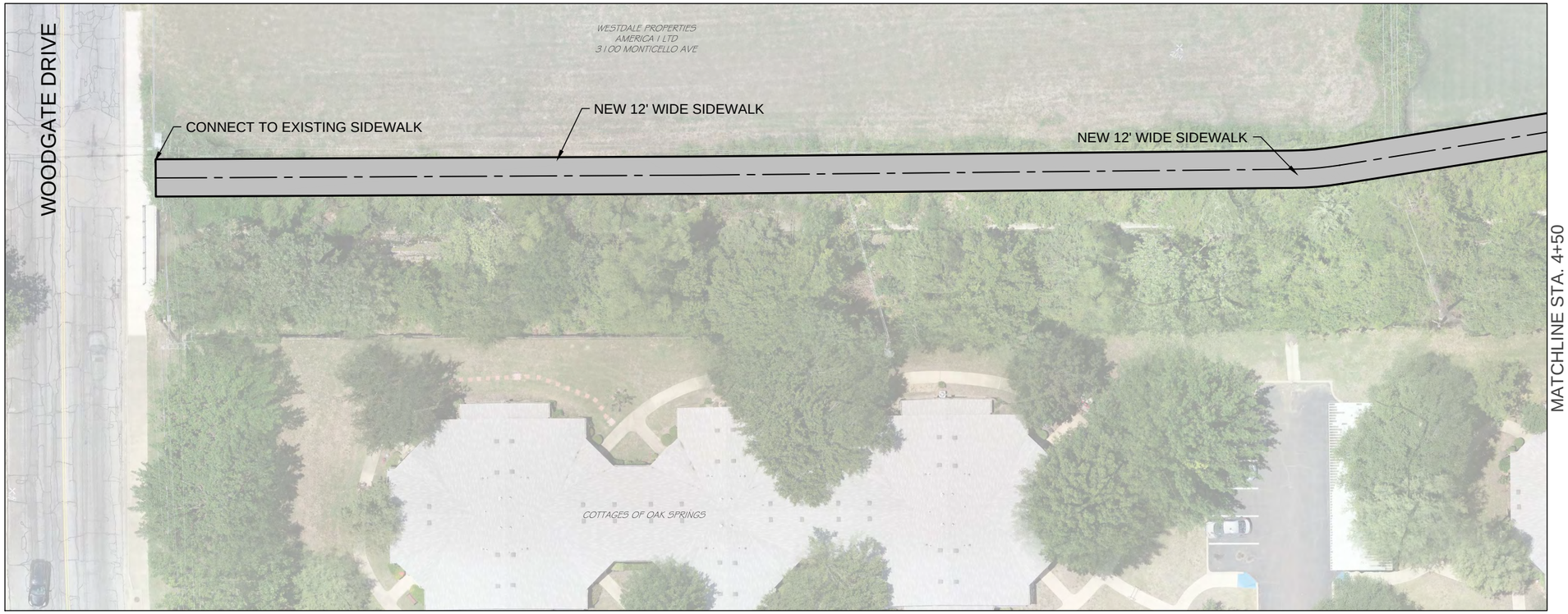

20 10 0 20 40

SCALE IN FEET

LEGEND:

EXTENTS OF CONCRETE SIDEWALK

| REV. | DESCRIPTION | DATE |
|---|---|---|

THIS DOCUMENT IS RELEASED FOR THE PURPOSE OF INTERIM REVIEW UNDER THE AUTHORITY OF
ANTHONY D. BEACH
64801
NAME LICENSE NO.
AS PER DATE ON DRAWING. IT IS NOT TO BE USED FOR BIDDING OR CONSTRUCTION.
Anthony D. Beach
08/07/2019

BSP engineers
F-7587
TBPE REGISTRATION F-7587

CITY OF WACO, TEXAS

WACO TA MARS DRIVE
BIKE & PEDESTRIAN
CONNECTIVITY IMPROVEMENTS

FLAT CREEK TRAIL
STA. 0+00-9+00

| SCALE | PROJECT NO. | DRAWING NO. |
|---|---|---|
| N/A | 172409.00 | 9 |
| DATE | SHEET NO. | |
| 08/07/2019 | 1 of 3 | |

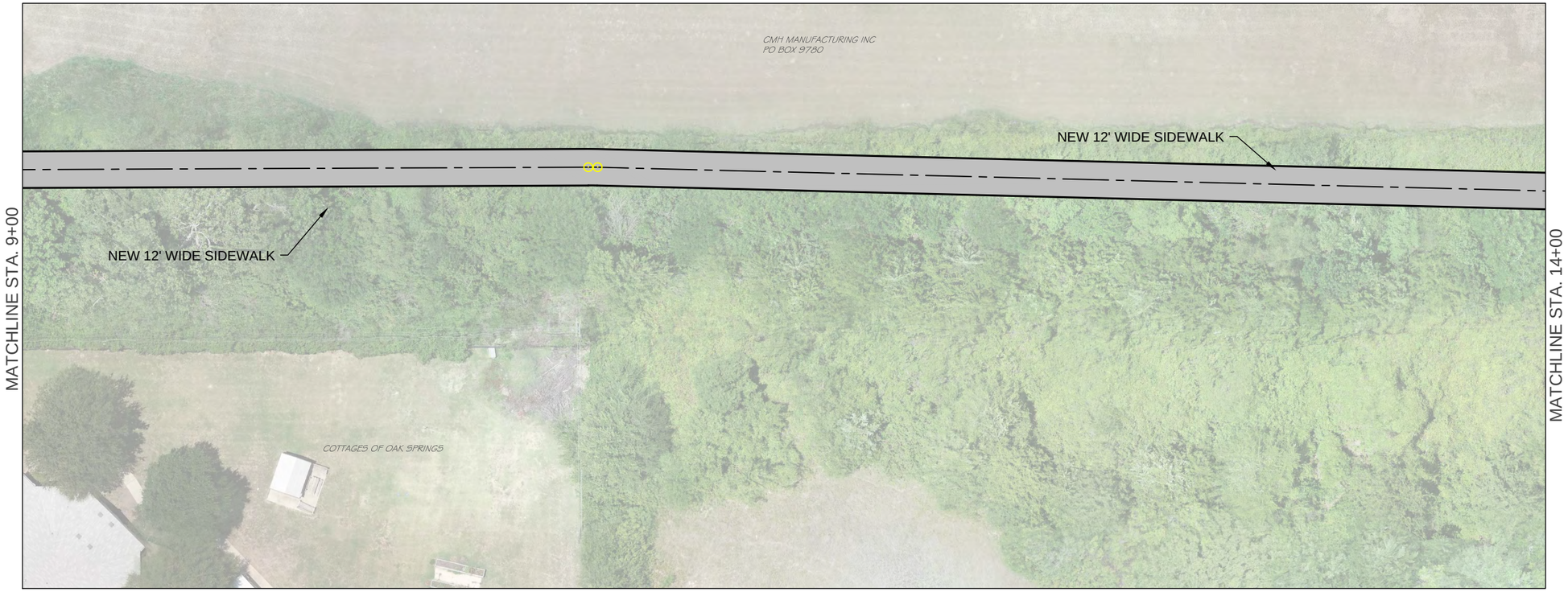

20 10 0 20 40

SCALE IN FEET

LEGEND:

EXTENTS OF CONCRETE SIDEWALK

| REV. | DESCRIPTION | DATE |
|---|---|---|

THIS DOCUMENT IS RELEASED FOR THE PURPOSE OF INTERIM REVIEW UNDER THE AUTHORITY OF
ANTHONY D. BEACH
64801
NAME LICENSE NO.
AS PER DATE ON DRAWING. IT IS NOT TO BE USED FOR BIDDING OR CONSTRUCTION.
08/07/2019

BSP engineers
TBPE REGISTRATION F-7587

CITY OF WACO, TEXAS

WACO TA MARS DRIVE
BIKE & PEDESTRIAN
CONNECTIVITY IMPROVEMENTS

FLAT CREEK TRAIL
STA. 9+00-19+00

| SCALE | PROJECT NO. | DRAWING NO. |
|---|---|---|
| N/A | 172409.00 | 10 |
| DATE | SHEET NO. | |
| 08/07/2019 | 2 of 3 | |

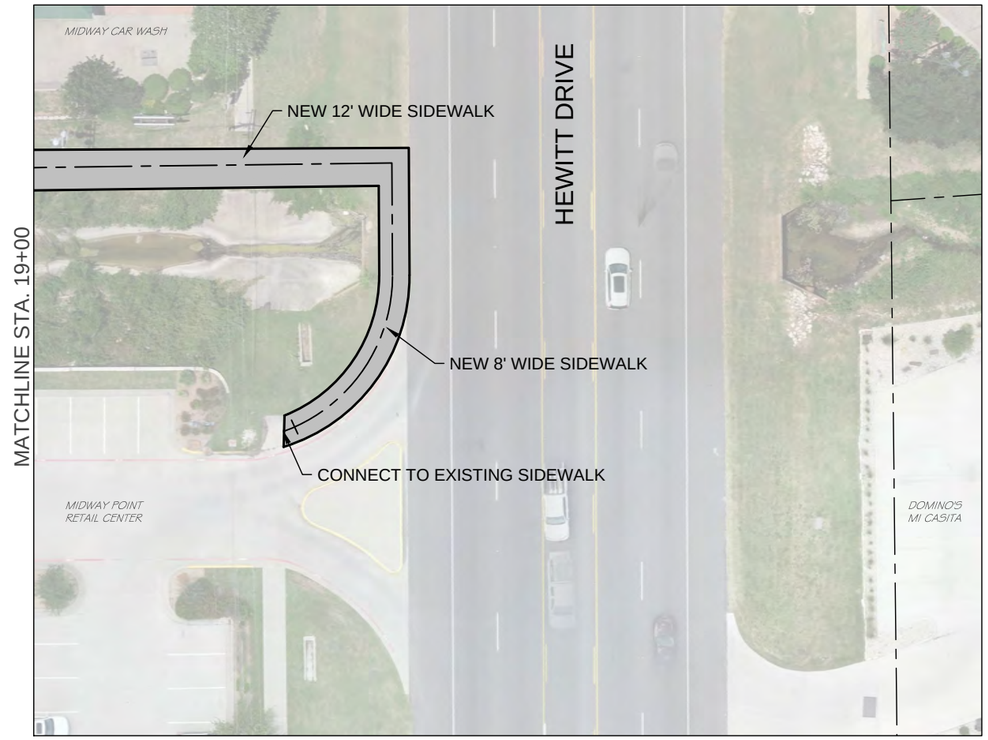


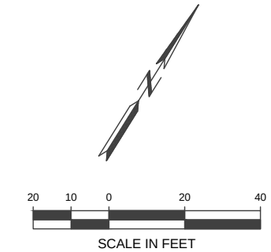


LEGEND:

EXTENTS OF CONCRETE SIDEWALK

| REV. | DESCRIPTION | DATE |
|---|---|---|

THIS DOCUMENT IS RELEASED FOR THE PURPOSE OF INTERIM REVIEW UNDER THE AUTHORITY OF
ANTHONY D. BEACH
64801
NAME LICENSE NO.
AS PER DATE ON DRAWING. IT IS NOT TO BE USED FOR BIDDING OR CONSTRUCTION.
08/07/2019

BSP engineers
TBPE REGISTRATION F-7587

CITY OF WACO, TEXAS

WACO TA MARS DRIVE
BIKE & PEDESTRIAN
CONNECTIVITY IMPROVEMENTS

CREEK SIDEWALK
STA. 19+00-END

| SCALE | PROJECT NO. | DRAWING NO. |
|---|---|---|
| N/A | 172409.00 | 11 |
| DATE 08/07/2019 | SHEET NO. 3 of 3 | |

# STREETS - GENERAL NOTES

## GENERAL

1. ALL CONCRETE, REINFORCEMENT, AND PLACEMENT MUST COMPLY WITH SECTION 5.1 OF THE CITY OF WACO STANDARD SPECIFICATIONS FOR CONSTRUCTION.
2. PLEASE REFER TO CITY OF WACO MANUAL OF STANDARD DETAILS, GENERAL DETAILS, GENERAL CONCRETE AND REINFORCEMENT NOTES.

## STREETS

3. SAWED JOINTS MUST BE SAWED AS SOON AS SAWING CAN BE ACCOMPLISHED WITHOUT DAMAGE TO THE PAVEMENT AND BEFORE 24 HOURS AFTER PLACING THE CONCRETE, THE EXACT TIME WILL BE APPROVED BY THE CITY ENGINEER.

## CURB AND GUTTER

4. THESE NOTES SHALL APPLY TO ALL THE TYPES OF CURBS AND GUTTERS.
5. CURB AND GUTTER FORMS NEED TO BE "TAPPED" TO MINIMIZE VOIDS. WITHIN 24 HOURS OF REMOVAL OF THE FORMS, ANY VOIDS SHALL BE PATCHED WITH PORTLAND CEMENT MORTAR.
6. 3" MINIMUM CLEAR DISTANCE SHALL BE USED FOR ALL REBAR.
7. EXPANSION JOINTS WITH EXPANSION MATERIAL SHALL BE PLACED AT 50' MINIMUM INTERVALS, AND AT THE BEGINNING AND END OF ALL CURB RETURNS AND DRIVE APPROACHES. EXPANSION JOINTS SHALL BE CONSTRUCTED TO MATCH EXISTING PAVEMENT EXPANSION JOINTS IN ALL CURBS AND GUTTERS ADJACENT TO JOINTED CONCRETE PAVEMENT OR FLATWORK.
8. AT ALL EXPANSION JOINTS FOR CURBS AND GUTTERS, THE FOLLOWING SHALL APPLY:
   - 8.1. JOINTS SHALL BE 1/2 " WIDE
   - 8.2. MATERIALS USED SHALL BE IN ACCORDANCE WITH CITY SPECIFICATIONS FOR EXPANSION JOINTS
   - 8.3. USE 24" LONG 5/8" DIAMETER SMOOTH BARS FOR DOWELS
   - 8.4. USE 5/8" P.V.C PIPE SLEEVE WITH CAPPED END PLACED LEVEL AND PERPENDICULAR TO THE FACE
9. CONTROL (DUMMY) JOINTS WILL BE CUT ON 10' SPACING. JOINTS WILL BE CUT AT LEAST HALFWAY THROUGH THE FACE, TOP, AND GUTTER.
10. CURB AND GUTTER SHALL CURE A MINIMUM OF 7 DAYS PRIOR TO INSTALLATION OF STREET BASE COURSE. IF CYLINDER BREAK TEST SHOW A COMPRESSIVE STRENGTH OF 3000 PSI, THE CITY ENGINEER MAY APPROVE INSTALLION OF BASE COURSE PRIOR TO 7 DAYS.
11. THE METHOD USED TO PLACE THE CURB AND GUTTER SHALL PRODUCE A UNIFORM PRODUCT.
12. 1/2" EXPANSION JOINT IS REQUIRED WHERE BACK OF CURBS OR CURB CUTS IS ADJACENT TO CONCRETE FLATWORK (I.E. SIDEWALKS OR RIPRAP)
13. ALL EXISTING CURBS AND GUTTERS SHALL BE REMOVED BY FULL DEPTH SAWCUT PERPENDICULAR TO THE STREET OR REMOVED AT EXISTING JOINTS.
14. IF MORTAR IS USED, IT SHALL BE 1/2" THICK 1:1 MIX
15. THE SUBGRADE AND BASE UNDER AND EXTENDING BEYOND THE CURB AND GUTTER SHALL BE PLACED TO THE SAME PARAMETERS AS THE ADJACENT STREET.
16. IF THE PLASTICITY INDEX OF THE SUBGRADE IS MORE THAN 15, THEN THE SUBGRADE SHALL BE STABILIZED.
17. IF BOTTOM OF CURB DOES NOT EXTEND TO TOP OF SUBGRADE, FILL MUST BE ONE OF THE FOLLOWING: CONCRETE (EXTEND DEPTH OF CURB), 4" MINIMUM COMPACTED ROAD GRAVEL, OR 4" MINIMUM COMPACTED STABILIZED SUBGRADE MATERIAL.
18. THE LIP OF GUTTER SHALL BE THE SAME ELEVATION AS TOP OF SURFACE COURSE.

## METAL BEAM GUARD FENCE

5. METAL BEAM GUARD FENCE SHALL BE INSTALLED IN ACCORDANCE WITH THE LATEST TEXAS DEPARTMENT OF TRANSPORTATION ROADWAY STANDARDS AND STANDARD SPECIFICATIONS.

DISCLAIMER: THE USE OF THIS STANDARD IS GOVERNED BY THE "TEXAS ENGINEERING PRACTICE ACT". NO WARRANTY OF ANY KIND IS MADE BY THE CITY OF WACO FOR ANY PURPOSE WHATSOEVER. THE CITY OF WACO ASSUMES NO RESPONSIBILITY FOR THE CONVERSION OF THIS STANDARD TO OTHER FORMATS OR FOR INCORRECT RESULTS OR DAMAGES RESULTING FROM ITS USE.

WACO ENGINEERING DIVISION

DATE 05/31/2018

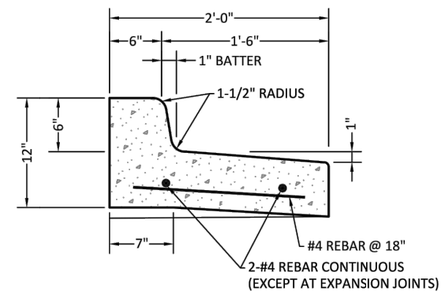


**INDIRECT FLOW**

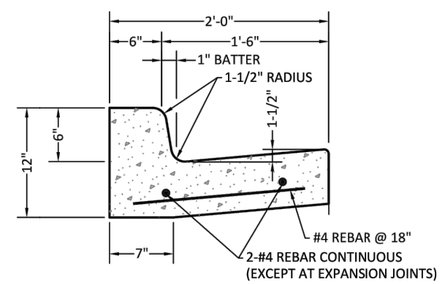


**DIRECT FLOW**

## STANDARD CURB & GUTTER DETAIL

DISCLAIMER: THE USE OF THIS STANDARD IS GOVERNED BY THE "TEXAS ENGINEERING PRACTICE ACT". NO WARRANTY OF ANY KIND IS MADE BY THE CITY OF WACO FOR ANY PURPOSE WHATSOEVER. THE CITY OF WACO ASSUMES NO RESPONSIBILITY FOR THE CONVERSION OF THIS STANDARD TO OTHER FORMATS OR FOR INCORRECT RESULTS OR DAMAGES RESULTING FROM ITS USE.

WACO ENGINEERING DIVISION

DATE 05/31/2018

| REV. | DESCRIPTION | DATE |
|---|---|---|

THIS DOCUMENT IS RELEASED FOR THE PURPOSE OF INTERIM REVIEW UNDER THE AUTHORITY OF ANTHONY D. BEACH 64801 NAME LICENSE NO. AS PER DATE ON DRAWING. IT IS NOT TO BE USED FOR BIDDING OR CONSTRUCTION.
08/07/2019

BSP engineers F-7587
TBPE REGISTRATION F-7587

CITY OF WACO, TEXAS

WACO TA MARS DRIVE
BIKE & PEDESTRIAN
CONNECTIVITY IMPROVEMENTS

CITY OF WACO STANDARD
STREET DETAILS 1

| SCALE | PROJECT NO. | DRAWING NO. |
|---|---|---|
| N/A | 172409.00 | 12 |
| DATE 08/07/2019 | SHEET NO. X of X | |

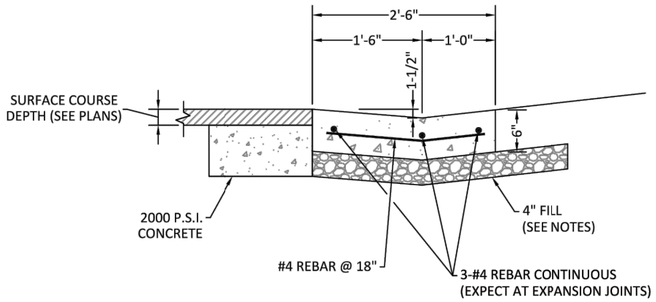


**STREET REHABILITATION VALLEY CURB DETAIL**

PROJECT NAME:
CITY ENGINEER SIGNATURE:
DATE:
NOTE: THIS DETAIL IS ONLY VALID FOR USE IF APPROVED BY THE CITY ENGINEER

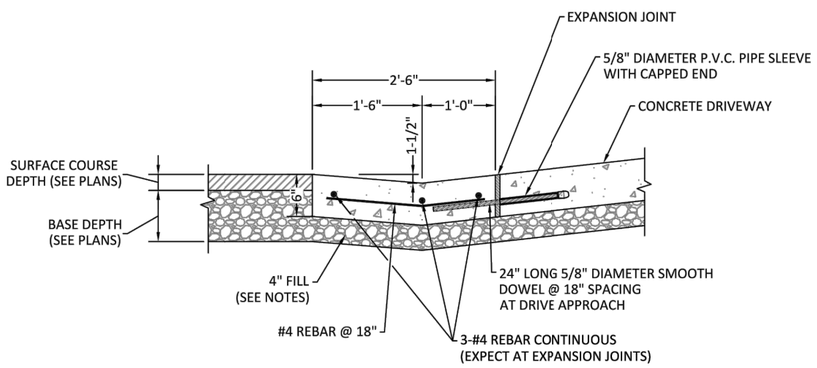


**DRIVEWAY VALLEY CURB DETAIL**

PROJECT NAME:
CITY ENGINEER SIGNATURE:
DATE:
NOTE: THIS DETAIL IS ONLY VALID FOR USE IF APPROVED BY THE CITY ENGINEER

## ADDITIONAL VALLEY CURB DETAILS

DISCLAIMER: THE USE OF THIS STANDARD IS GOVERNED BY THE "TEXAS ENGINEERING PRACTICE ACT". NO WARRANTY OF ANY KIND IS MADE BY THE CITY OF WACO FOR ANY PURPOSE WHATSOEVER. THE CITY OF WACO ASSUMES NO RESPONSIBILITY FOR THE CONVERSION OF THIS STANDARD TO OTHER FORMATS OR FOR INCORRECT RESULTS OR DAMAGES RESULTING FROM ITS USE.

WACO | ENGINEERING DIVISION | DATE 05/31/2018

*ST-10*

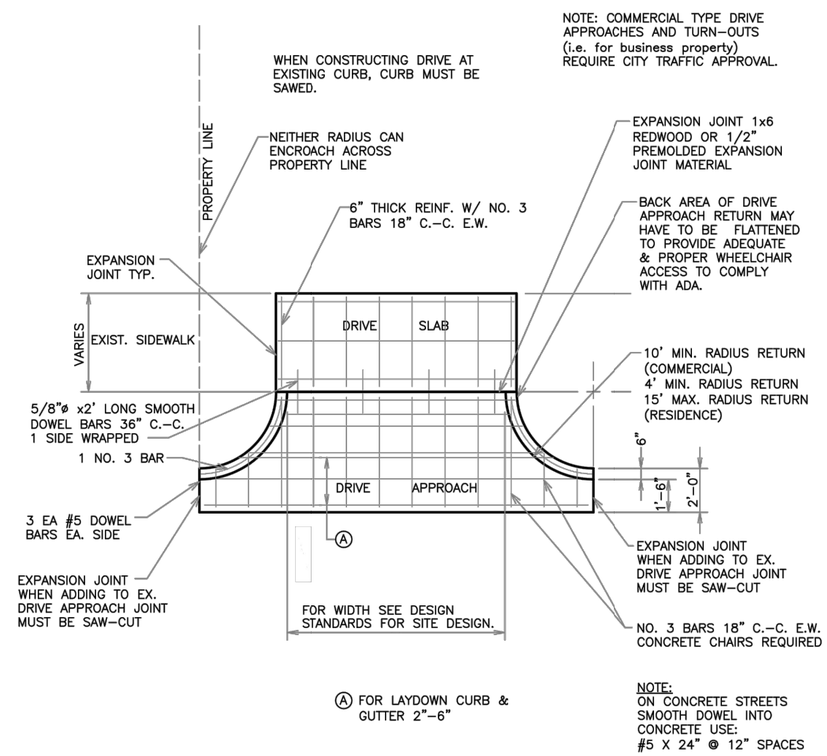


## STANDARD DRIVE APPROACH

WACO | ENGINEERING SERVICES

| REVISIONS | | | | BOOK PAGE NUMBER |
|---|---|---|---|---|
| NO. | COMMENTS | BY | DATE | 0000 |
| | | | | |
| | | | | |
| | | | | DATE |
| 03 | REMOVE SEAL | DG | 09/03/2014 | 09/03/2014 |
| 02 | UPDATED | DG | 01/05/2012 | |
| 01 | UPDATED | DG | 10/01/2010 | |

| REV. | DESCRIPTION | DATE |
|---|---|---|

THIS DOCUMENT IS RELEASED FOR THE PURPOSE OF INTERIM REVIEW UNDER THE AUTHORITY OF ANTHONY D. BEACH 64801 (NAME, LICENSE NO.) AS PER DATE ON DRAWING. IT IS NOT TO BE USED FOR BIDDING OR CONSTRUCTION.
08/07/2019

BSP engineers F-7587
TBPE REGISTRATION F-7587

CITY OF WACO, TEXAS

WACO TA MARS DRIVE BIKE & PEDESTRIAN CONNECTIVITY IMPROVEMENTS

CITY OF WACO STANDARD STREET DETAILS 2

| SCALE | PROJECT NO. | DRAWING NO. |
|---|---|---|
| N/A | 172409.00 | 13 |
| DATE | SHEET NO. | |
| 08/07/2019 | X of X | |

ST-11

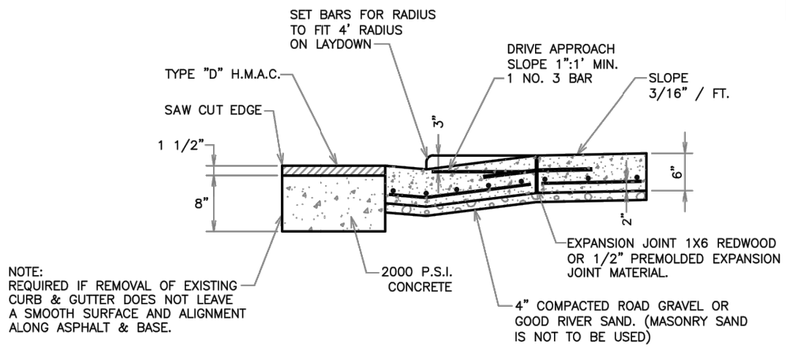


***STREET TIE-IN***

***NEW DRIVE APPROACH ON EXISTING ASPHALT STREET***

NOTE:

1. CURB & GUTTER TO BE PAID FOR SEPARATELY FROM CONCRETE VALLEY AT THE CONTRACTOR UNIT PRICE FOR CURB & GUTTER.
2. IF CURB RETURNS ARE NOT EXISTING VALLEY AND RETURNS SHALL BE MONOLITHIC WHEN C. & G. IS CALLED FOR.
3. UPSTREAM RETURN IN VALLEY SHALL BE CONSTRUCTED SO WATER WILL NOT POND.
4. VALLEY MAY BE PLACED IN TWO 1/2 SECTIONS.

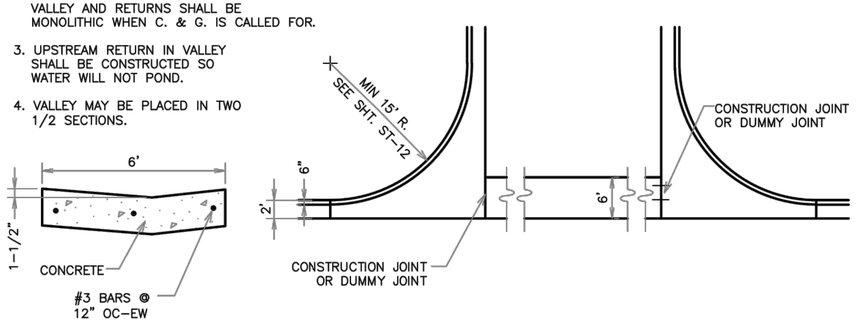


***STANDARD VALLEY***

ENGINEERING SERVICES

| REVISIONS | | | | BOOK PAGE NUMBER |
|---|---|---|---|---|
| NO. | COMMENTS | BY | DATE | 0000 |
| 02 | REMOVE SEAL | DG | 09/03/2014 | DATE 09/03/2014 |
| 01 | UPDATED | DG | 10/01/2010 | |

ST-12

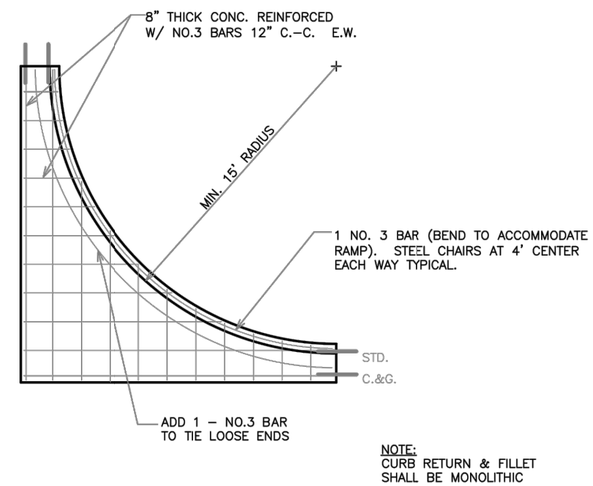


***CONCRETE CURB & GUTTER FILLET***

ENGINEERING SERVICES

| REVISIONS | | | | BOOK PAGE NUMBER |
|---|---|---|---|---|
| NO. | COMMENTS | BY | DATE | 0000 |
| 02 | REMOVE SEAL | DG | 09/03/2014 | DATE 09/03/2014 |
| 01 | UPDATED | DG | 10/01/2010 | |

| REV. | DESCRIPTION | DATE |
|---|---|---|

THIS DOCUMENT IS RELEASED FOR THE PURPOSE OF INTERIM REVIEW UNDER THE AUTHORITY OF ANTHONY D. BEACH 64801 NAME LICENSE NO. AS PER DATE ON DRAWING. IT IS NOT TO BE USED FOR BIDDING OR CONSTRUCTION.

08/07/2019

BSP engineers F-7587 TBPE REGISTRATION F-7587

CITY OF WACO, TEXAS

WACO TA MARS DRIVE
BIKE & PEDESTRIAN
CONNECTIVITY IMPROVEMENTS

CITY OF WACO STANDARD
STREET DETAILS 3

| SCALE | PROJECT NO. | DRAWING NO. |
|---|---|---|
| N/A | 172409.00 | 14 |
| DATE 08/07/2019 | SHEET NO. X of X | |

SW-1

# SIDEWALKS - GENERAL

GENERAL

1. ALL CONCRETE AND REINFORCEMENT MATERIALS AND PLACEMENT MUST COMPLY WITH SECTION 5.1 OF THE CITY OF WACO STANDARD SPECIFICATIONS FOR CONSTRUCTION AND WITH ALL NOTES ON SHEET G–10 OF THE CITY OF WACO MANUAL OF STANDARD DETAILS.

2. PROPOSED SIDEWALKS MUST COMPLY WITH THE CITY OF WACO CODES AND ORDINANCES, CHAPTER 22, ARTICLE III, SIDEWALKS.

3. TX–DOT STANDARDS PED–12A, SHEETS 1, 2, AND 3, INCLUDING NOTES, SHALL BE INCORPORATED AS PART OF THE CITY OF WACO STANDARD DETAILS. IN CASE OF CONFLICT, THE WACO DETAILS SHALL GOVERN. TRUNCATED BRICK PAVERS ARE REQUIRED FOR DETECTABLE WARNING STRIPS

4. TX–DOT PED–12A, SHEET 1 SHOWS SOME TYPICAL RAMPS, ILLUSTRATING REQUIRED SLOPES AND DIMENSIONS AS THEY MIGHT BE APPLIED IN A FEW PARTICULAR CIRCUMSTANCES. IF ADEQUATE RIGHT OF WAY IS NOT AVAILABLE FOR THESE TYPICAL RAMPS, ALTERNATE DESIGNS MUST BE CREATED TO FIT WITHIN AVAILABLE RIGHT OF WAY AND STILL SATISFY THE GENERAL SLOPE AND DIMENSIONAL REQUIREMENTS ILLUSTRATED.

CONFIGURATION

5. SIDEWALKS IN C–4 ZONING ARE INTENDED TO BE PEDESTRIAN MEDALLION PATHS. SEE SW–10 THROUGH SW–17.

6. SIDEWALKS AND LANDINGS SHALL BE FORMED AND PLACED AT A MAXIMUM CROSS–SLOPE OF 1.5%. CROSS–SLOPES EXCEEDING 2% WILL NOT BE ACCEPTED.

7. NEW SIDEWALK SHALL BE CONNECTED TO ALL EXISTING ADJACENT WALKS AND STEPS.

8. LANDINGS SHALL BE 5' X 5' MINIMUM WITH A MAXIMUM 2% SLOPE IN ANY DIRECTION, GRADED FOR POSITIVE DRAINAGE TO STREET.

9. IF AN EXISTING GUTTER AT THE ENTRANCE TO A NEW RAMP OR LANDING HAS A CROSS SLOPE GREATER THAN 2%, THE EXISTING GUTTER MUST BE REMOVED AND REPLACED WITH GUTTER TIED TO THE 2% CROSS SLOPE ON ONE SIDE AN THE EXISTING STREET ON THE OTHER. THE SLOPE OF THE NEW GUTTER TOWARD THE STREET MAY NOT EXCEED 1:12.

10. SLOPE OF RAMPS SHALL NOT EXCEED 1:12 UNLESS OTHERWISE NOTED.

11. MINIMUM RAMP WIDTH IS 3' EXCLUSIVE OF FLARED SIDES.

CONSTRUCTION

12. PLACE CONSTRUCTION JOINTS WITH EXPANSION MATERIAL AT MINIMUM 50' INTERVALS. EXPANSION JOINTS SHALL EXTEND THROUGH ANY ADJACENT RETAINING WALL OR TRANSITION CURB.

13. PLACE TOOLED, CRACK CONTROL (DUMMY) JOINTS AT A SPACING EQUAL TO THE WIDTH OF THE WALK.

14. CHANGES IN LEVEL GREATER THAN 1/4 INCH ARE NOT PERMITTED ALONG SIDEWALKS.

15. WHERE SIDEWALK OR WHEELCHAIR RAMP TOUCHES BACK OF CURB, INLET, POLE OR ANY STRUCTURE, PLACE 1/2" EXPANSION JOINT MATERIAL AND #4 DOWEL PINS @ 24" C–C.

16. WORKMANSHIP MUST BE SUCH AS TO PRODUCE A RAMP WITH A NEAT, UNIFORM APPEARANCE. POOR WORKMANSHIP OR APPEARANCE SHALL BE GROUNDS FOR REMOVAL OR REJECTION OF RAMP AREAS.

WACO ENGINEERING SERVICES

REVISIONS

| NO. | COMMENTS | BY | DATE |
|---|---|---|---|
| 04 | REMOVE SEAL | DG | 09/03/2014 |
| 03 | ADD NOTES #10 & 11. | DG | 05/02/2014 |
| 02 | REVISED ALL NOTES. | DG | 02/01/2013 |
| 01 | REVISE NOTE 2 – GRADE 40 TO GRADE 60. | DG | 12/15/2011 |

BOOK PAGE NUMBER 0000

DATE 09/03/2014

SW-2

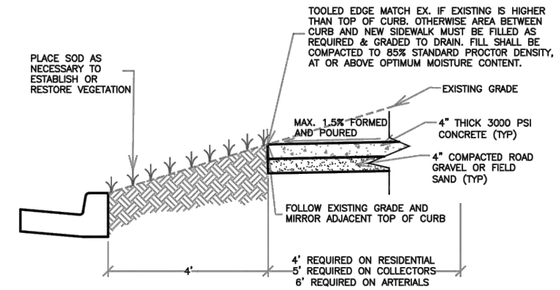


NOTE:
IF EXISTING GRADE IS LOWER THAN NEW BACK OF SIDEWALK, FILL SHALL BE PLACED WITH MAXIMUM SLOPE OF 25% DOWN TO EXISTING GRADE. FILL SHALL BE COMPACTED TO 85% STANDARD PROCTOR DENSITY AT OR ABOVE OPTIMUM MOISTURE CONTENT.

## TYPICAL DETAIL OF FRONT OF SIDEWALKS

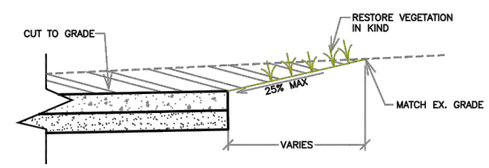


CUT BEHIND SIDEWALK TO MATCH EX. GRADE

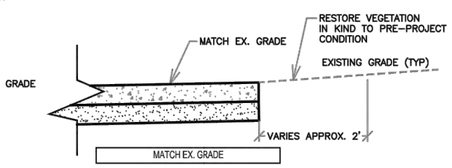


MATCH EX. GRADE

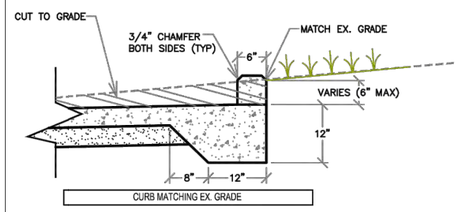


CURB MATCHING EX. GRADE

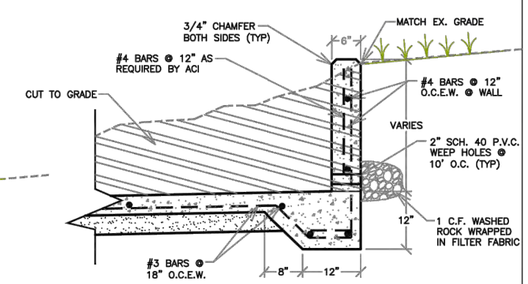


NOTE: #3 BARS SHALL EXTEND TO FRONT OF SIDEWALK

RETAINING WALL MATCHING EX. GRADE

## TYPICAL DETAILS OF BACK OF SIDEWALKS

WACO ENGINEERING SERVICES

REVISIONS

| NO. | COMMENTS | BY | DATE |
|---|---|---|---|
| 01 | REMOVE SEAL | DG | 09/03/2014 |

BOOK PAGE NUMBER 0000

DATE 09/03/2014

| REV. | DESCRIPTION | DATE |
|---|---|---|

THIS DOCUMENT IS RELEASED FOR THE PURPOSE OF INTERIM REVIEW UNDER THE AUTHORITY OF ANTHONY D. BEACH 64801 (NAME, LICENSE NO.) AS PER DATE ON DRAWING. IT IS NOT TO BE USED FOR BIDDING OR CONSTRUCTION.

Anthony D. Beach
08/07/2019

BSP engineers
TBPE REGISTRATION F-7587

CITY OF WACO, TEXAS

WACO TA MARS DRIVE
BIKE & PEDESTRIAN
CONNECTIVITY IMPROVEMENTS

CITY OF WACO STANDARD
SIDEWALK DETAILS 1

| SCALE | PROJECT NO. | DRAWING NO. |
|---|---|---|
| N/A | 172409.00 | 15 |
| DATE 08/07/2019 | SHEET NO. X of X | |

SW-3

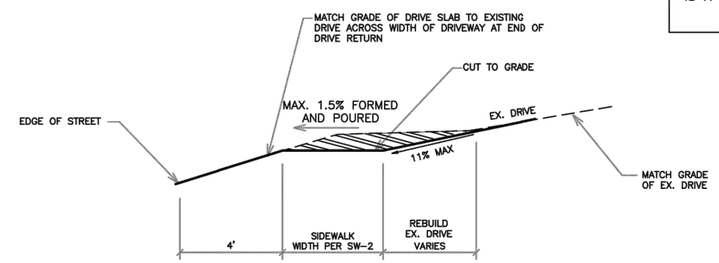


SECTION VIEW
"B" - "B"

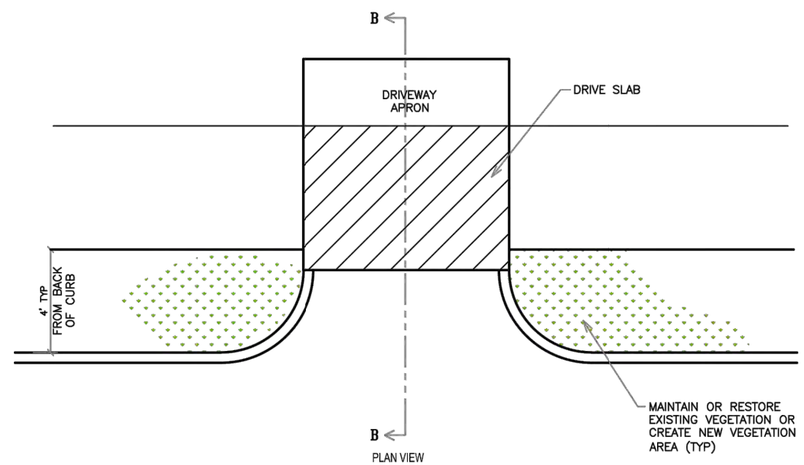


PLAN VIEW

*TYPICAL SIDEWALK TREATMENT AT NEW DRIVEWAYS*

SCALE
NTS

WACO

ENGINEERING SERVICES

REVISIONS

| NO. | COMMENTS | BY | DATE |
|---|---|---|---|
| 03 | REMOVE SEAL | DG | 09/03/2014 |
| 02 | SLOPE FOR REBUILDING DRIVES FROM 15% MAX. TO 11% MAX. | DG | 02/01/2013 |
| 01 | UPDATED | DG/CA | 07/03/2009 |

BOOK PAGE NUMBER 0000

DATE 09/03/2014

| REV. | DESCRIPTION | DATE |
|---|---|---|

THIS DOCUMENT IS RELEASED FOR THE PURPOSE OF INTERIM REVIEW UNDER THE AUTHORITY OF
ANTHONY D. BEACH
64801
NAME LICENSE NO.
AS PER DATE ON DRAWING. IT IS NOT TO BE USED FOR BIDDING OR CONSTRUCTION.
08/07/2019

BSP engineers
F - 7587
TBPE REGISTRATION F-7587

CITY OF WACO, TEXAS

WACO TA MARS DRIVE
BIKE & PEDESTRIAN
CONNECTIVITY IMPROVEMENTS

CITY OF WACO STANDARD
SIDEWALK DETAILS 2

| SCALE | PROJECT NO. | DRAWING NO. |
|---|---|---|
| N/A | 172409.00 | 16 |
| DATE 08/07/2019 | SHEET NO. X of X | |

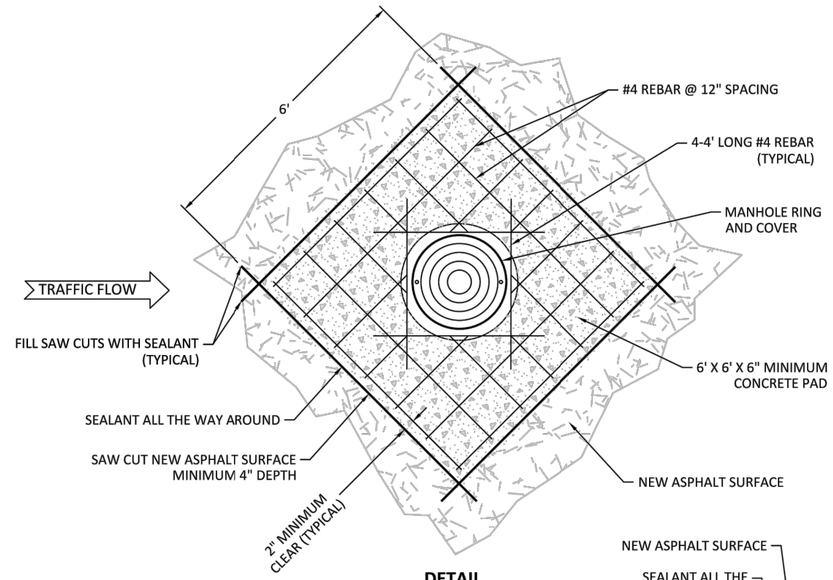


**DETAIL**

NOTES:
1. CONTRACTOR SHALL PROTECT SEWER FROM DEBRIS.
2. ANY DEBRIS WHICH ENTERS SEWER SHALL BE IMMEDIATELY REMOVED BY CONTRACTOR. DO NOT ENTER SANITARY SEWER MANHOLE WITHOUT FIRST OBTAINING A CONFINED SPACE PERMIT.
3. RING SHALL BE THOROUGHLY GROUTED IN PLACE PRIOR TO PLACING CONCRETE PATCH.
4. REUSE EXISTING MANHOLE RING AND COVER EXCEPT PER FOLLOWING NOTE.
5. EXISTING MANHOLE RING AND COVER DAMAGED BY CONSTRUCTION SHALL BE REPLACED AT CONTRACTOR'S EXPENSE WITH PAMREX/PAMTIGHT OR APPROVED EQUAL MANHOLE RING & COVER LABELED "CITY OF WACO SEWER" THAT MEETS THE CITY OF WACO MANUAL OF DETAILS SEWER DETAILS AND SPECIFICATIONS.
6. SEALANT SHALL BE TXDOT APPROVED FOR TRAFFIC SIGNAL DETECTION LOOP INSTALLATION.
7. INSTALLATION OF SEALANT SHALL: FILL SAW CUT TO HALF DEPTH, CHECK FOR AIR BUBBLES OR MATERIAL BUILD-UP, AND FILL TO ROAD SURFACE LEVEL.

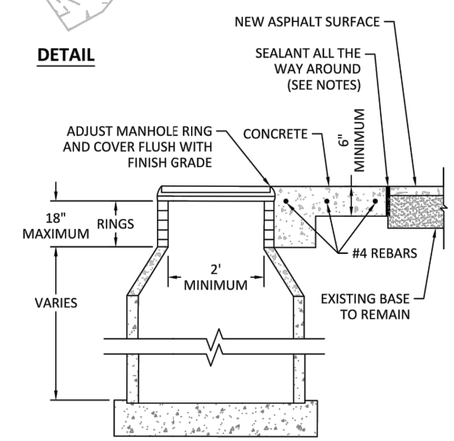


**ELEVATION**

## MANHOLE LID HEIGHT ADJUSTMENT DETAIL

(FOR ASPHALT STREET REHABILITATION PROJECTS ONLY)

DISCLAIMER: THE USE OF THIS STANDARD IS GOVERNED BY THE "TEXAS ENGINEERING PRACTICE ACT". NO WARRANTY OF ANY KIND IS MADE BY THE CITY OF WACO FOR ANY PURPOSE WHATSOEVER. THE CITY OF WACO ASSUMES NO RESPONSIBILITY FOR THE CONVERSION OF THIS STANDARD TO OTHER FORMATS OR FOR INCORRECT RESULTS OR DAMAGES RESULTING FROM ITS USE.

WACO

ENGINEERING DIVISION

DATE 05/31/2018

| REV. | DESCRIPTION | DATE |
|---|---|---|

THIS DOCUMENT IS RELEASED FOR THE PURPOSE OF INTERIM REVIEW UNDER THE AUTHORITY OF ANTHONY D. BEACH 64801 NAME LICENSE NO. AS PER DATE ON DRAWING. IT IS NOT TO BE USED FOR BIDDING OR CONSTRUCTION.
08/07/2019

BSP engineers F-7587
TBPE REGISTRATION F-7587

CITY OF WACO, TEXAS

WACO TA MARS DRIVE BIKE & PEDESTRIAN CONNECTIVITY IMPROVEMENTS

CITY OF WACO STANDARD MANHOLE LID HEIGHT ADJUSTMENT DETAIL

| SCALE | PROJECT NO. | DRAWING NO. |
|---|---|---|
| N/A | 172409.00 | 17 |
| DATE 08/07/2019 | SHEET NO. X of X | |

G-1

# STORM WATER POLLUTION PREVENTION

## GENERAL NOTES

1. ALL CONSTRUCTION WORK WITHIN THE CITY OF WACO MUST COMPLY WITH THE TEXAS COMMISSION ON ENVIRONMENTAL QUALITY GENERAL PERMIT FOR STORM WATER DISCHARGES FROM CONSTRUCTION ACTIVITIES UNDER THE TEXAS POLLUTANT DISCHARGE ELIMINATION SYSTEM (TPDES) PROGRAM, AND CITY OF WACO ORDINANCES AND STANDARD SPECIFICATIONS FOR CONSTRUCTION (SECTION GP–3.6.D STORM WATER POLLUTION PREVENTION PLAN (EROSION CONTROL PLAN)).

2. ALL STORM WATER POLLUTION PREVENTION AND EROSION CONTROL PLANS MUST BE APPROVED BY THE CITY OF WACO STORM WATER MANAGER PRIOR TO INSTALLATION OF THE PROTECTIVE MEASURES. THE INSTALLATION OF THE PROTECTIVE MEASURES MUST BE INSPECTED AND APPROVED BY THE CITY OF WACO ENVIRONMENTAL INSPECTOR PRIOR TO COMMENCING ANY OTHER CONSTRUCTION ACTIVITIES.

3. ALL MATERIALS USED FOR STORM WATER POLLUTION PREVENTION SHALL MEET THE MINIMUM DESIGN AND SPECIFICATION REQUIREMENTS AS REFERENCED FROM THE NORTH CENTRAL TEXAS COUNCIL OF GOVERNMENTS (NCTCOG) INTEGRATED STORM WATER MANAGEMENT (SWM) DESIGN MANUAL FOR CONSTRUCTION. THE CONTRACTOR SHALL USE APPROPRIATE CONTROL DEVICES TO PROTECT AGAINST STORM WATER POLLUTION FROM CONSTRUCTION SITE ACTIVITY.

4. IN THE EVENT OF CONFLICT BETWEEN THE SPECIFIED REQUIREMENTS AND STORM WATER POLLUTION CONTROL LAWS, RULES, OR REGULATIONS, OR OTHER LOCAL, STATE, OR FEDERAL AGENCIES, THE MORE RESTRICTIVE LAWS, RULES OR REGULATIONS SHALL APPLY.

5. ALL PROTECTIVE MEASURES SHALL BE INSPECTED REGULARLY (AT LEAST AS OFTEN AS REQUIRED BY THE TPDES CONSTRUCTION GENERAL PERMIT).

6. ALL POLLUTION PREVENTION CONTROL STRUCTURES AND PROCEDURES MUST BE MAINTAINED IN FULL WORKING ORDER AT ALL TIMES DURING CONSTRUCTION. THIS SHALL INCLUDE ANY NECESSARY REPAIR OR REPLACEMENT OF ITEMS, WHICH HAVE BECOME DAMAGED OR INEFFECTIVE. REMOVE SEDIMENT AND OTHER POLLUTANTS, WHICH ACCUMULATE IN POLLUTION CONTROL DEVICES AS NECESSARY TO MAINTAIN THE INTENDED DESIGN EFFICIENCY FOR THE POLLUTION PREVENTION MEASURE.

5. UPON COMPLETION OF CONSTRUCTION AND ACHIEVEMENT OF FINAL STABILIZATION, PROPERLY REMOVE THE TEMPORARY POLLUTANT CONTROL STRUCTURES AND COMPLETE THE AREA AS INDICATED. POLLUTION CONTROL DEVICES MADE OF ORGANIC MATERIALS DESIGNED TO DEGRADE NATURALLY IN PLACE WILL NOT REQUIRE REMOVAL, UNLESS SPECIFICALLY REQUIRED BY THE OWNER, ENGINEER, OR OWNER'S REPRESENTATIVE.

6. STANDARD DETAILS FOR SOME PROTECTIVE MEASURES HAVE BEEN INCLUDED. PLEASE REFER TO THE iSWM DESIGN MANUAL FOR OTHER PROTECTIVE MEASURES AS NEEDED.

WACO ENGINEERING SERVICES

REVISIONS

| NO. | COMMENTS | BY | DATE |
|---|---|---|---|
| 1 | REMOVE SEAL | DG | 09/03/2014 |

BOOK PAGE NUMBER 0000

DATE 09/03/2014

G-3

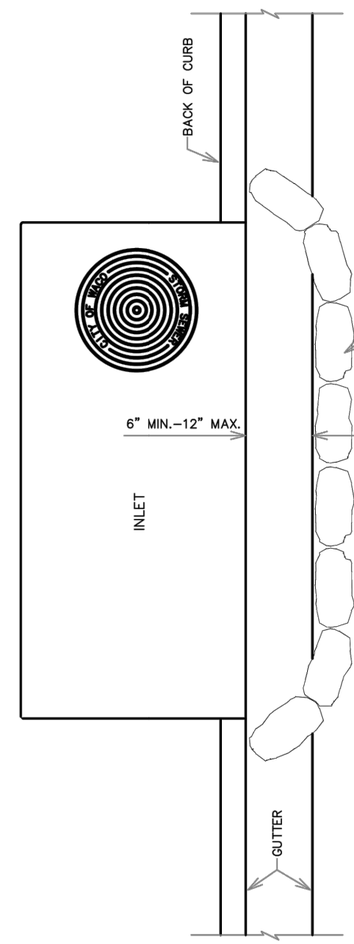


TOP VIEW

CURB INLET DRAIN FILTER

WACO ENGINEERING SERVICES

REVISIONS

| NO. | COMMENTS | BY | DATE |
|---|---|---|---|
| 1 | REMOVE SEAL | DG | 09/03/2014 |

BOOK PAGE NUMBER 0000

DATE 09/03/2014

| REV. | DESCRIPTION | DATE |
|---|---|---|

THIS DOCUMENT IS RELEASED FOR THE PURPOSE OF INTERIM REVIEW UNDER THE AUTHORITY OF ANTHONY D. BEACH 64801 NAME LICENSE NO. AS PER DATE ON DRAWING. IT IS NOT TO BE USED FOR BIDDING OR CONSTRUCTION.

Anthony D. Beach 08/07/2019

BSP engineers F-7587 TBPE REGISTRATION F-7587

CITY OF WACO, TEXAS

WACO TA MARS DRIVE BIKE & PEDESTRIAN CONNECTIVITY IMPROVEMENTS

CITY OF WACO STANDARD GENERAL DETAILS 1

| SCALE | PROJECT NO. | DRAWING NO. |
|---|---|---|
| N/A | 172409.00 | 18 |
| DATE 08/07/2019 | SHEET NO. X of X | |

G-4

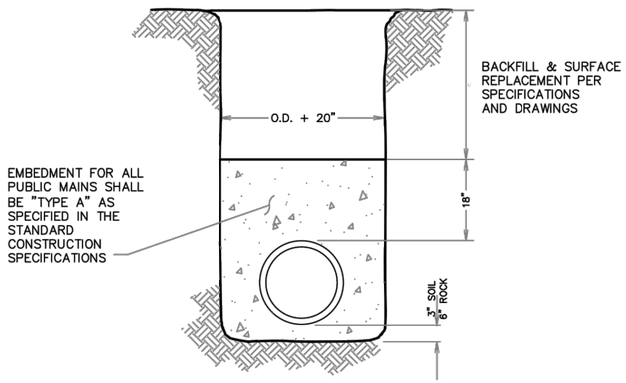


## STANDARD EMBEDMENT

NOTE: IF GROUND WATER IS ENCOUNTERED LAY THE PIPE IN A BEDDING OF 3/4" WASHED ROCK AS SHOWN ABOVE. REFER TO NOTES ON STANDARD DETAIL S-2.

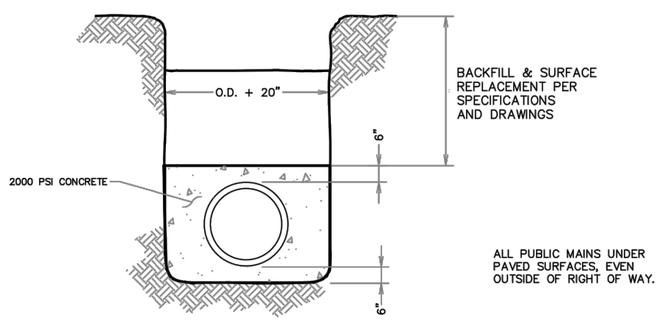


## CONCRETE ENCASEMENT

G-5

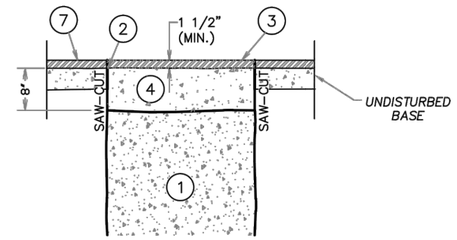


**CLASS A**
**H.M.A.C.**

NOTE: CLASS A-1 SURFACE REPLACEMENT SHALL HAVE 2" ASPHALT AND 10" CONCRETE

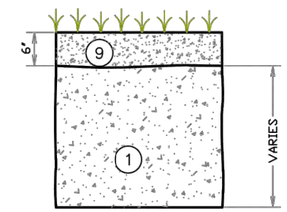


**CLASS E**
**SEED OR SOD**

## SURFACE REPLACEMENT DETAILS

1. GRAVEL FOR TRENCH BACKFILL – MECHANICALLY COMPACTED IN ONE FOOT (MAX.) LIFTS TO 95% STANDARD PROCTOR DENSITY.
2. TACK COAT OF RC-2 ASPHALT-APPLIED TO CLEAN SURFACE AND ALLOWED TO CURE.
3. HOT MIX ASPHALTIC CONCRETE – HOT LAY, PLACED AND COMPACTED TO MATCH EXISTING SURFACE THICKNESS. 1 1/2" MIN.
4. CONCRETE – MIN. 2000 P.S.I, PLACED TO 1 1/2" BELOW EXISTING SURFACE. 8" MIN.
5. CONCRETE – MIN. 3000 P.S.I., PLACED TO MATCH EXISTING CONCRETE PAVEMENT. 8" MIN. IF THE EXISTING CONCRETE PAVEMENT IS REINFORCED, THE NEW CONCRETE PAVEMENT SHALL BE REINFORCED IN A LIKE MANNER. SEE STANDARD DETAILS G-10 & ST-1
6. ROAD GRAVEL – MECHANICALLY COMPACTED TO 95% STD. PROCTOR DENSITY.
7. CUT – EDGE OF EXISTING PAVEMENT ON BOTH SIDES OF DITCH LINE TO PRODUCE A SMOOTH AND EVEN EDGE OF SURFACE REPLACEMENT.
8. USE FLOWABLE FILL TO BACKFILL ALL DITCHES 18" OR NARROWER, IN THE RIGHT OF WAY.
9. 6" MINIMUM TOP SOIL AND SEED OR SOD – PAID SUBSIDIARY.

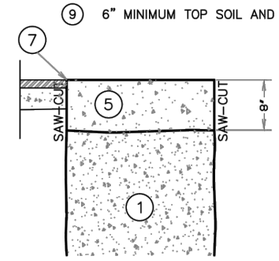


**CLASS C**
**CONCRETE**

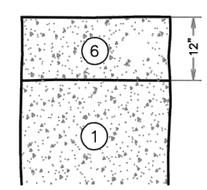


**CLASS D**
**ROAD GRAVEL**

WACO

ENGINEERING SERVICES

| REVISIONS | | | | BOOK PAGE NUMBER 0000 |
|---|---|---|---|---|
| NO. | COMMENTS | BY | DATE | |
| 03 | REMOVE SEAL | DG | 09/03/2014 | DATE 09/03/2014 |
| 02 | ADD NOTES REGARDING BACKFILL & SURFACE REPLACEMENT | DG | 05/01/2014 | |
| 01 | REVISED NOTE REGARDING BEDDING OF 3/4" WASHED ROCK | DG | 09/09/2011 | |

WACO

ENGINEERING SERVICES

| REVISIONS | | | | BOOK PAGE NUMBER 0000 |
|---|---|---|---|---|
| NO. | COMMENTS | BY | DATE | |
| 04 | REMOVE SEAL | DG | 09/03/2014 | DATE 09/03/2014 |
| 03 | REMOVE "CLASS B" ADD "CLASS E"/ADD NOTE 9. | DG | 05/01/2014 | |
| 02 | REVISE NOTE #8 | DG | 02/01/2013 | |
| 01 | REMOVE DIMENSION: 6" MINIMUM (CLASS B) / ADD SAW-CUT | DG | 06/21/2011 | |

| REV. | DESCRIPTION | DATE |
|---|---|---|

THIS DOCUMENT IS RELEASED FOR THE PURPOSE OF INTERIM REVIEW UNDER THE AUTHORITY OF
ANTHONY D. BEACH
64801
NAME LICENSE NO.
AS PER DATE ON DRAWING. IT IS NOT TO BE USED FOR BIDDING OR CONSTRUCTION.
08/07/2019

BSP engineers
F-7587
TBPE REGISTRATION F-7587

CITY OF WACO, TEXAS

WACO TA MARS DRIVE
BIKE & PEDESTRIAN
CONNECTIVITY IMPROVEMENTS

CITY OF WACO STANDARD
GENERAL DETAILS 2

| SCALE | PROJECT NO. | DRAWING NO. |
|---|---|---|
| N/A | 172409.00 | 19 |
| DATE | SHEET NO. | |
| 08/07/2019 | X of X | |

G-8

NOTES:

1) TRAFFIC AREAS SHALL INCLUDE ALL AREAS UNDER THE INFLUENCE OF TRAFFIC, INCLUDING ALL TRENCHES IN THE RIGHT OF WAY OR BACK OF CURB, ALL ALLEY WAYS, AND PARKING LOTS.

2) PLEASE REFER TO STANDARD DETAIL G-4 FOR EMBEDMENT INFORMATION AND STANDARD DETAIL G-5 FOR SURFACE REPLACEMENT INFORMATION.

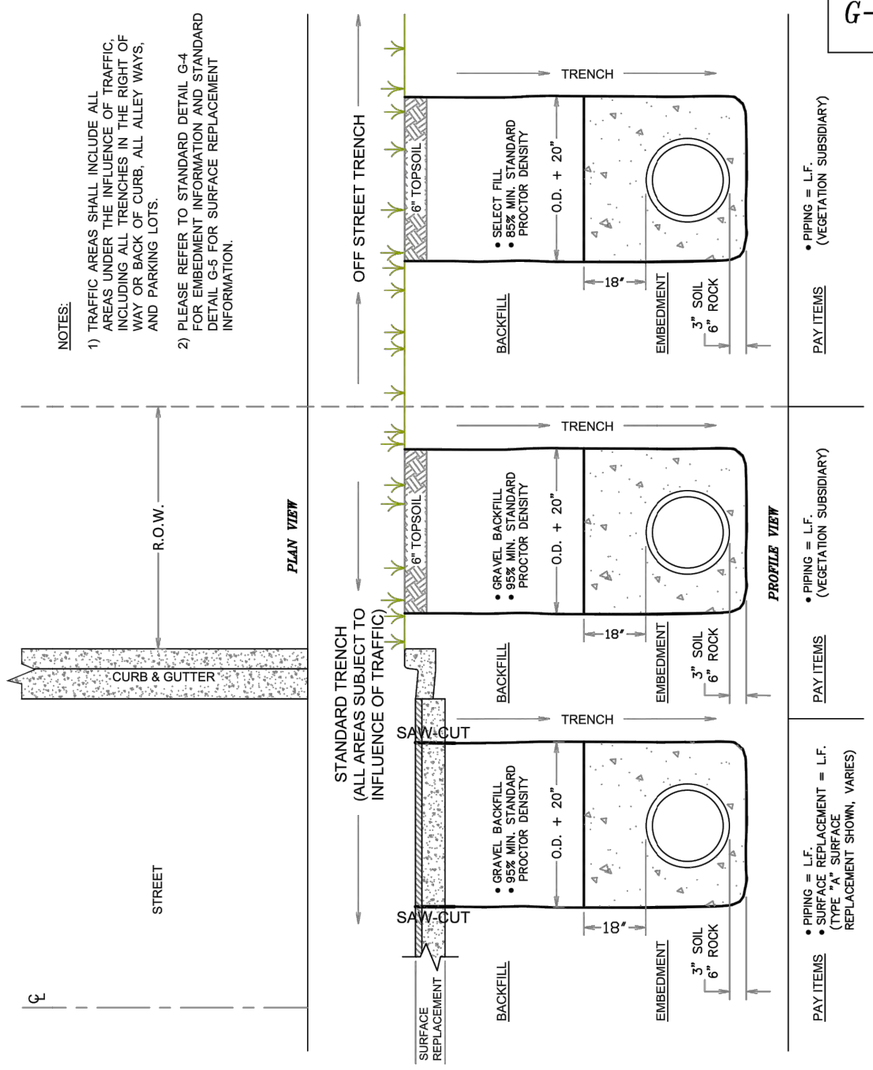


# TRENCH BACKFILL GUIDELINES

| REVISIONS | | | | |
|---|---|---|---|---|
| NO. | COMMENTS | BY | DATE | BOOK PAGE NUMBER 0000 |
| 03 | REMOVE SEAL | DG | 09/03/2014 | DATE 09/03/2014 |
| 02 | ADD NOTE 2. | DG | 05/01/2014 | |
| 01 | REVISE NOTE 1. | DG | 02/01/2013 | |

WACO ENGINEERING SERVICES

G-10

# GENERAL CONCRETE & REINFORCEMENT NOTES

## GENERAL

1. ALL CONCRETE AND REINFORCEMENT MATERIALS AND PLACEMENT MUST COMPLY WITH SECTION 5.1 OF THE CITY OF WACO STANDARD SPECIFICATIONS FOR CONSTRUCTION.
2. CURING MEMBRANE SHALL BE APPLIED ACCORDING TO MANUFACTURER'S RECOMMENDATIONS.

## MATERIALS

3. ALL CONCRETE SHALL BE A 3000 PSI, 5 SACK, MIX WITH A MAXIMUM 15% FLYASH CONTENT; PLACED AT A MAXIMUM 4" SLUMP, UNLESS OTHERWISE SPECIFIED BY THE ENGINEER OF RECORD AND APPROVED BY THE CITY ENGINEER.
4. ALL REINFORCING STEEL SHALL BE ASTM A 615 GRADE 60, UNLESS OTHERWISE SPECIFIED.

## SITE PREPARATION

5. GRADE AND SUB GRADE NEED TO BE ADEQUATELY WATERED, PRIOR TO THE PLACEMENT OF PUG AND PRIOR TO THE PLACEMENT OF CONCRETE.
6. GRADE AND/OR SUB GRADE SHALL BE COMPACTED TO 95% STANDARD PROCTOR DENSITY AT ±2% OPTIMAL MOISTURE CONTENT.

## REINFORCING STEEL

7. CONSTRUCTION VEHICLES SHALL NOT DRIVE ON REINFORCEMENT.
8. REINFORCING STEEL SHALL BE PLACED IN ACCORDANCE WITH THE DESIGN SPECIFICATIONS AND THE ACI STANDARDS, WITH OVERLAPS OF 40 BAR DIAMETERS.
9. DOWEL BARS SHALL BE SMOOTH, LEVEL, AND PERPENDICULAR TO THE JOINT; ADEQUATELY SUPPORTED TO RETAIN PROPER ALIGNMENT; AND SHALL HAVE ONE END PROTECTED AGAINST BONDING TO THE CONCRETE IN ACCORDANCE WITH STANDARD CONSTRUCTIONS SPECIFICATIONS (SEE SECTION 5.1 PART 1 ITEM 6).
10. REBAR CHAIRS SHALL BE PLACED ON 4' MAXIMUM SPACING, EACH WAY.
11. REBAR SHALL BE PLACED SUCH THAT THE MINIMUM COVER IS 2", AND THE MAXIMUM LATERAL COVER IS 3".

## CONCRETE

12. PLACEMENT OF CONCRETE NEEDS TO COMPLY WITH THE SPECIFICATIONS AND ACI STANDARDS, INCLUDING HOT AND COLD WEATHER PLACEMENT. SEE STANDARD SPECIFICATION SECTION 5.1 PART 3 ITEM E FOR MORE INFORMATION.
13. NO WATER SHALL BE ADDED AFTER INSPECTION AND TESTING.
14. CONCRETE SHALL BE VIBRATED WHERE POSSIBLE.
15. UNLESS OTHERWISE SPECIFIED, CONCRETE SHALL BE PLACED AT A 4" SLUMP, ±1".

## DIMENSIONAL TOLERANCES

16. LEVEL AND HORIZONTAL ALIGNMENT TOLERANCES FOR CURBS, GUTTERS, PAVEMENTS, SIDEWALKS, AND RAMPS, IN ALL DIRECTIONS, SHALL BE SUCH THAT THE GAP BELOW AN UNLEVELED 10' STRAIGHTEDGE RESTING ON THE HIGH SPOTS SHALL NOT EXCEED 1/8".
17. DIMENSIONAL TOLERANCES FOR OTHER CONCRETE PLACEMENTS SHALL COMPLY WITH ACI 117.

## CONSTRUCTION AND CRACK CONTROL JOINTS

18. UNLESS OTHERWISE SPECIFIED CONSTRUCTION (FULL DEPTH) JOINTS SHALL BE PLACED AT MAXIMUM OF 50' AND CRACK CONTROL JOINTS (DUMMY JOINTS) AT A MAXIMUM OF 10'.
19. CRACK CONTROL JOINTS MAY BE TOOLED OR SAWED A MINIMUM OF 1/2 THE THICKNESS OF THE CONCRETE ON CURB AND GUTTER AND 1/2" ON SIDEWALKS.
20. CONSTRUCTION JOINTS ARE FULL DEPTH JOINTS AND MAY BE CONSTRUCTED WITH DOWEL BARS, AS INDICATED IN THE DESIGN AND DETAILS.
21. CONSTRUCTION JOINTS WITH EXPANSION MATERIAL ARE FULL DEPTH JOINTS THAT MAY BE CONSTRUCTED WITH DOWEL BARS, AS INDICATED IN THE DESIGN AND DETAILS. EXPANSION MATERIAL MAY BE 1/2" THICK REDWOOD OR ANY MATERIAL COMPLYING WITH ASTM D 1751. ALL MATERIALS MUST BE PLACED IN ACCORDANCE WITH MANUFACTURERS RECOMMENDATIONS.

WACO ENGINEERING SERVICES

| REVISIONS | | | | |
|---|---|---|---|---|
| NO. | COMMENTS | BY | DATE | BOOK PAGE NUMBER 0000 |
| 2 | REMOVE SEAL | DG | 09/03/2014 | DATE 09/03/2014 |
| 1 | REVISE NOTES #3, #9 & #12 | DG | 07/17/2013 | |

| REV. | DESCRIPTION | DATE |
|---|---|---|

THIS DOCUMENT IS RELEASED FOR THE PURPOSE OF INTERIM REVIEW UNDER THE AUTHORITY OF ANTHONY D. BEACH 64801 (NAME, LICENSE NO.) AS PER DATE ON DRAWING. IT IS NOT TO BE USED FOR BIDDING OR CONSTRUCTION.

Anthony D. Beach
08/07/2019

BSP engineers F-7587
TBPE REGISTRATION F-7587

CITY OF WACO, TEXAS

WACO TA MARS DRIVE
BIKE & PEDESTRIAN
CONNECTIVITY IMPROVEMENTS

CITY OF WACO STANDARD
GENERAL DETAILS 3

| SCALE | PROJECT NO. | DRAWING NO. |
|---|---|---|
| N/A | 172409.00 | 20 |
| DATE 08/07/2019 | SHEET NO. X of X | |

## CONSTRUCTION MATERIAL LAB TESTING MATRIX - 1 OF 3

| Construction Operation | Standard Specifications | | Standard Details | Applicable Testing | Frequency of Testing |
|---|---|---|---|---|---|
| | Material Specs | Construction Specs | | | |
| **Embankment** | | Section 1.5, Part 2 | | Standard Proctor & field densities | Proctor for each material to be used. Densities to be project specific |
| **Trenching Operations** | Section 4.2, Part 2 | Section 4.2, Part 3 | | | |
| Embedment | Section 4.2, Part 2.A.1, & Part 2.A.2 | Section 4.2, Part 3.A.5 | G-4 & G-8 | Gradations, Atterberg Limits, Standard Proctor, Field Densities | Gradation, Atterberg Limits, and Proctor at beginning of project on material submitted for use and at any time there is an apparent change in material. Densities to be project specific. |
| Backfill | Section 4.2, Part 2.A.3 | Section 4.2, Part 3.A.5 | G-5 & G-8 | Gradations, Atterberg Limits, Standard Proctor, Field Densities | Gradation, Atterberg Limits, and Proctor at beginning of project on material submitted for use and at any time there is an apparent change in material. Densities: 4 in first 100 LF and 2 every additional 500 LF. Additional densities as required if compaction fails to meet specifications. |
| Flowable Fill | Section 4.2, Part 2.A.3(f) | | G-5 Note 8 & G-8 Note 2 | | |

G-11

ENGINEERING SERVICES

CITY OF WACO

| REVISIONS | | | |
|---|---|---|---|
| NO. | COMMENTS | BY | DATE |

DATE 02/25/2015

## CONSTRUCTION MATERIAL LAB TESTING MATRIX - 2 OF 3

| Construction Operation | Standard Specifications | | Standard Details | Applicable Testing | Frequency of Testing |
|---|---|---|---|---|---|
| | Material Specs | Construction Specs | | | |
| **Subgrade** | Testing - Section 2.6 | | | | |
| Stabilization Determination | | | ST-2 | Atterberg Limits to determine if stabilization is necessary, pH to determine amount of lime needed to stabilize | Determined during design. |
| Lime Treatment | Section 2.4, Part 2 | Section 2.4, Part 3 | ST-2 | Gradations, Standard Proctor, Moisture Bias Calculations, Field Densities | Initial gradations performed to determine mixing pattern. Standard Proctor performed on each material that is visibly different. Densities performed at a rate of one per 300 LF of paving for two lanes. |
| Portland Cement Treatment | Section 2.2.B, Part 2 | Section 2.2.B, Part 3 | | Unconfined Compressive Strength | 1 sample per day of operations |
| Reclamation | Section 2.3.D, Part 2 | Section 2.3.D, Part 3 | | Refer to either Lime Treatment or Portland Cement Treatment | Refer to either Lime Treatment or Portland Cement Treatment |
| Existing Material | | Section 2.2, Part 3 | | Standard Proctor, Field Densities | Standard Proctor performed on each visibly different material. Densities performed at a rate of one per 300 LF of paving for two lanes. |
| **Base Course** | Testing - Section 2.6 | | | | |
| Gravel Base Course | Section 2.3, Part 2 | Section 2.3, Part 3 | | Gradations, Atterberg Limits, Standard Proctor, Field Densities | Gradation, Atterberg Limits, and Proctor at beginning of project on material submitted for use and at any time there is an apparent change in material. Densities to be project specific. |
| Flexible Base | Section 2.3.B, Part 2 | Section 2.3.B, Part 3 | | Gradations, Atterberg Limits, Standard Proctor, Field Densities | Gradation, Atterberg Limits, and Proctor at beginning of project on material submitted for use and at any time there is an apparent change in material. Densities to be project specific. |
| Cement Treated Base (Pug Base) | Section 2.3.C, Part 2 | Section 2.3.C, Part 3 | ST-2 | Unconfined Compressive Strength | 1 sample per day of operations |

G-11A

ENGINEERING SERVICES

CITY OF WACO

| REVISIONS | | | |
|---|---|---|---|
| NO. | COMMENTS | BY | DATE |

DATE 02/25/2015

## CONSTRUCTION MATERIAL LAB TESTING MATRIX - 3 OF 3

| Construction Operation | Standard Specifications | | Standard Details | Applicable Testing | Frequency of Testing |
|---|---|---|---|---|---|
| | Material Specs | Construction Specs | | | |
| **Surface Course** | Testing - Section 3.7 | | | | |
| Hot-Mix Asphaltic Concrete Pavement | Section 3.3, Part 2 | Section 3.3, Part 3 | ST-2 | Extraction, Gradation, Stability & Flow, Densities | 1 sample per day of paving operations. Densities - one per 300 LF of paving for two lanes. |
| Portland Cement Concrete Paving | Section 3.6, Part 2 | Section 3.6, Part 3 | ST-1, ST-3 thru ST-7, G-10 | Air Content, Slump, Compressive Strength | 1 set of 4 cylinders per 150 CY but no less than 2 sets per day |
| **Concrete** | Testing - Section 5.6 | | | | |
| Curb and Gutter | Section 5.1, Part 2 & 3 | Section 5.3, Part 3 | ST-1, ST-4, ST-8, ST-9, ST-9A, ST-9B, G-10 | Slump, Compressive Strength | One set of cylinders per placement for the first 5 placements then one set for every other placement thereafter. (max. of 2 sets per day) *Different trucks on the same site at different times of the day constitute different placements. |
| Drive Approach | Section 5.1, Part 2 & 3 | Section 5.4, Part 3 | ST-1, ST-10, ST-11, G-10 | Slump, Compressive Strength | |
| Valley & Fillet | Section 5.1, Part 2 & 3 | | ST-1, ST-11, ST-12, G-10 | Slump, Compressive Strength | |
| Sidewalk, Wheelchair Ramps, & Architectural Retaining Walls | Section 5.1, Part 2 & 3 | Section 5.4, Part 3 | ST-1, SW-1 thru SW-19, G-10 | Slump, Compressive Strength | |
| Concrete Lined Channel | Section 5.1, Part 2 & 3 | | D-1, D-14, G-10 | Slump, Compressive Strength | |
| Cast-In-Place Sanitary Sewer Manholes | Section 5.1, Part 2 & 3 | Section 4.8, Part 3.A.3 | S-2 Note 15, G-10 | Slump, Compressive Strength | |
| Storm Sewer Manholes | Section 5.1, Part 2 & 3 | | D-1, D-10 thru D-13, G-10 | Slump, Compressive Strength | |
| Inlets | Section 5.1, Part 2 & 3 | | D-1 thru D-7, D-9, G-10 | Slump, Compressive Strength | |
| Concrete Medians | Section 5.1, Part 2 & 3 | Section 5.1, Part 3 | ST-22, G-10 | Slump, Compressive Strength | |
| Reinforced Concrete Headers | Section 5.1, Part 2 & 3 | Section 5.1, Part 3 | G-10 | Slump, Compressive Strength | |
| Concrete Steps | Section 5.1, Part 2 & 3 | Section 5.1, Part 3 | G-10 | Slump, Compressive Strength | |
| Retaining Walls (Structural) | Section 5.1, Part 2 & 3 | Section 5.1, Part 3 | G-10 | Slump, Compressive Strength | One set per placement |

G-11B

ENGINEERING SERVICES

CITY OF WACO

| REVISIONS | | | |
|---|---|---|---|
| NO. | COMMENTS | BY | DATE |

DATE 02/25/2015

| REV. | DESCRIPTION | DATE |
|---|---|---|

THIS DOCUMENT IS RELEASED FOR THE PURPOSE OF INTERIM REVIEW UNDER THE AUTHORITY OF ANTHONY D. BEACH 64801 (NAME, LICENSE NO.) AS PER DATE ON DRAWING. IT IS NOT TO BE USED FOR BIDDING OR CONSTRUCTION.

Anthony D. Beach 08/07/2019

BSP engineers F-7587 TBPE REGISTRATION F-7587

CITY OF WACO, TEXAS

WACO TA MARS DRIVE
BIKE & PEDESTRIAN
CONNECTIVITY IMPROVEMENTS

CITY OF WACO STANDARD
GENERAL DETAILS 4

| SCALE | PROJECT NO. | DRAWING NO. |
|---|---|---|
| N/A | 172409.00 | 21 |
| DATE 08/07/2019 | SHEET NO. X of X | |

T-1

# TRAFFIC CONTROL PLANS

**GENERAL REQUIREMENTS**

- MUST CONFORM WITH CURRENT TEXAS MUTCD STANDARD
- MUST CLEARLY DEPICT EACH CONSTRUCTION STAGE
- MUST BE COMPILED BY A LICENSED OR CERTIFIED PERSONNEL
  - TEXAS LICENSED PROFESSIONAL ENGINEER
  - IMSA CERTIFIED WORK ZONE PERSONNEL
  - TEEX CERTIFIED WORK ZONE PERSONNEL (HW S002)

**TCP SUBMITTAL:**

- THE TCP SHALL BE SUBMITTED TO THE CITY OF WACO ENGINEERING OFFICE 15 DAYS PRIOR TO THE ANTICIPATED START DATE, WITH COPY OF CURRENT CERTIFICATION.

**OTHER INFORMATION**

- MULTIPLE PHASES OF CONSTRUCTION WILL REQUIRE A SEPARATE TCP FOR EACH PHASE. ALL MAY BE SUBMITTED AT ONE TIME FOR ACCEPTANCE.
- EACH TCP MUST BE DEVELOPED TO ADDRESS THE SPECIFIC CONDITIONS OF THE PLANNED CONSTRUCTION WORK ZONE LOCATION.
- CITY ORDINANCE: SEC. 23-2 TRAFFIC CONTROL

**LOCAL ROADS (CLASS 4)**

- TCP REQUIRED FOR LANE CLOSURES EXCEEDING 4 HOURS
- TCP MAY UTILIZE TX MUTCD TYPICAL DETAILS
- NIGHT TIME CLOSURES WILL REQUIRE 7' TALL SIGNS

**COLLECTORS (CLASS 3)**

- TCP REQUIRED FOR ANY LANE CLOSURE
- TCP MAY UTILIZE TX MUTCD TYPICAL DETAILS, EXCEPT AS FOLLOWS
  - SITE SPECIFIC TCP REQUIRED AT SIGNALIZED INTERSECTIONS
- NIGHT TIME CLOSURE WILL REQUIRE 7' TALL SIGNS AND ARROW BOARDS

**MINOR ARTERIAL (CLASS 2)**

- TCP REQUIRED FOR ANY LANE CLOSURE
- TCP MUST BE SITE SPECIFIC
- NIGHT TIME CLOSURE WILL REQUIRE 7' TALL SIGNS AND ARROW BOARDS

**MAJOR ARTERIAL (CLASS 1)**

- TCP REQUIRED FOR ANY LANE CLOSURE
- TCP MUST BE SITE SPECIFIC, AND SEALED BY A PROFESSIONAL ENGINEER
- NIGHT TIME CLOSURE WILL REQUIRE 7' TALL SIGNS AND ARROW BOARDS

**NOTE:** TCP'S FOR TX DOT ROADS, OR FOR PROJECTS OVERSEEN BY TX DOT MAY REQUIRE A TEXAS PROFESSIONAL ENGINEER TO STAMP. TCP'S FOR PROJECTS OCCURRING ON STATE ROADS WILL REQUIRE TXDOT APPROVAL. ACCESS TO AREA SCHOOLS, CHURCHES, AND OTHER PUBLIC BUILDINGS WILL NEED TO BE INCORPORATED INTO TCP'S.

WACO

TRAFFIC SERVICES

REVISIONS

| NO. | COMMENTS | BY | DATE |
|---|---|---|---|
| 1 | REMOVE SEAL | DG | 09/03/2014 |

BOOK PAGE NUMBER 0000

DATE 09/03/2014

| REV. | DESCRIPTION | DATE |
|---|---|---|

THIS DOCUMENT IS RELEASED FOR THE PURPOSE OF INTERIM REVIEW UNDER THE AUTHORITY OF ANTHONY D. BEACH 64801 NAME LICENSE NO. AS PER DATE ON DRAWING. IT IS NOT TO BE USED FOR BIDDING OR CONSTRUCTION.

08/07/2019

BSP engineers

TBPE REGISTRATION F-7587

CITY OF WACO, TEXAS

WACO TA MARS DRIVE
BIKE & PEDESTRIAN
CONNECTIVITY IMPROVEMENTS

CITY OF WACO STANDARD
TRAFFIC CONTROL PLAN NOTES

| SCALE | PROJECT NO. | DRAWING NO. |
|---|---|---|
| N/A | 172409.00 | 22 |
| DATE 08/07/2019 | SHEET NO. X of X | |

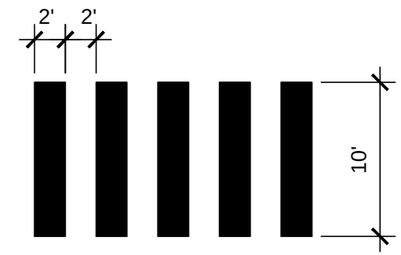


CROSSWALK STRIPING DETAIL

SCALE: NTS

| REV. | DESCRIPTION | DATE |
|---|---|---|

THIS DOCUMENT IS RELEASED FOR THE PURPOSE OF INTERIM REVIEW UNDER THE AUTHORITY OF
ANTHONY D. BEACH
64801
NAME LICENSE NO.
AS PER DATE ON DRAWING. IT IS NOT TO BE USED FOR BIDDING OR CONSTRUCTION.
08/07/2019

BSP engineers
F - 7587
TBPE REGISTRATION F-7587

CITY OF WACO, TEXAS

WACO TA MARS DRIVE
BIKE & PEDESTRIAN
CONNECTIVITY IMPROVEMENTS

MISCELLANEOUS DETAILS

| SCALE | PROJECT NO. | DRAWING NO. |
|---|---|---|
| N/A | 172409.00 | 23 |
| DATE 08/07/2019 | SHEET NO. X of X | |

DISCLAIMER:
The use of this standard is governed by the "Texas Engineering Practice Act". No warranty of any kind is made by TxDOT for any purpose whatsoever. TxDOT assumes no responsibility for the conversion of this standard to other formats or for incorrect results or damages resulting from its use.

TYPE 1

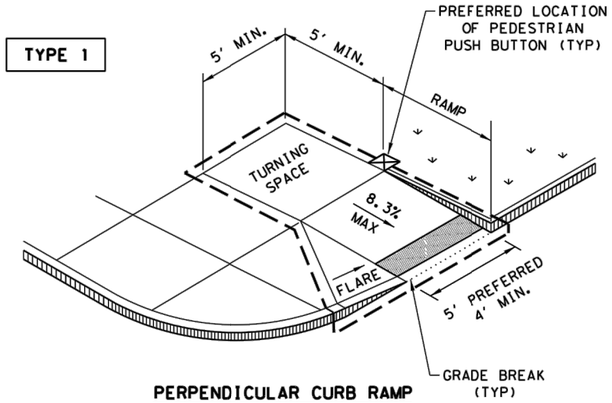


PERPENDICULAR CURB RAMP

TYPE 2

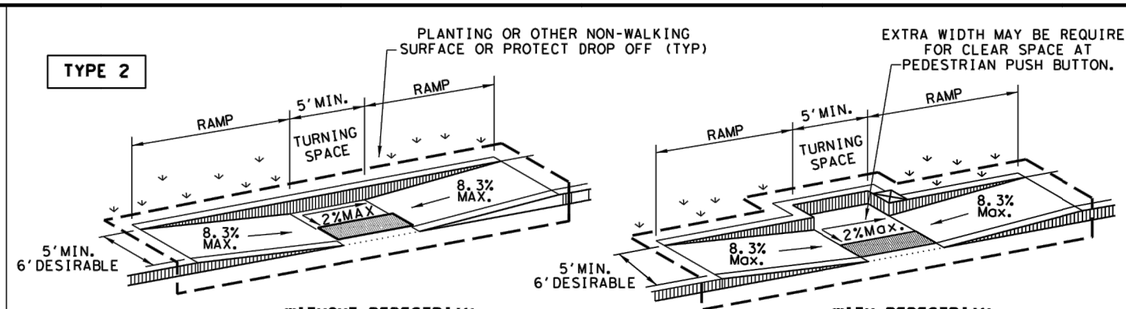


WITHOUT PEDESTRIAN PUSH BUTTON

WITH PEDESTRIAN PUSH BUTTON

PARALLEL CURB RAMP

TYPE 3

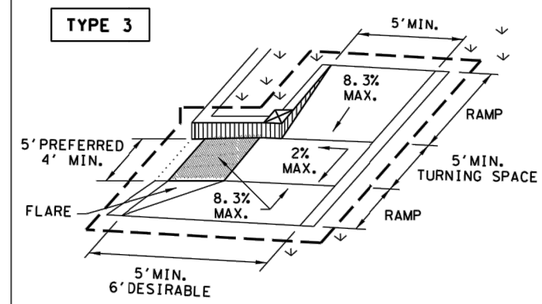


TYPE 6

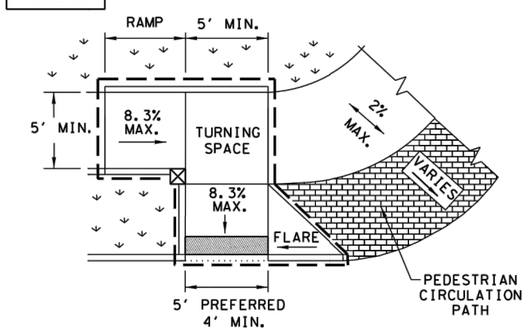


COMBINATION CURB RAMPS

TYPE 20

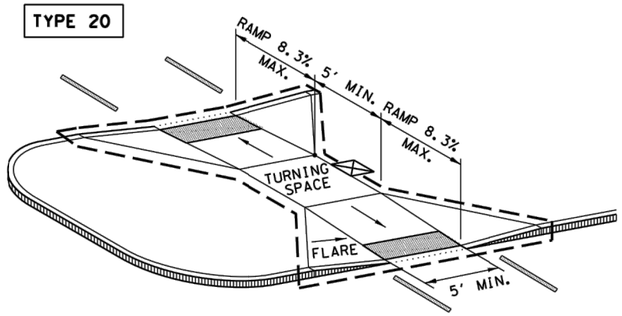


CURB RAMPS AT MEDIAN ISLANDS

TYPE 7

(SIDEWALK SET BACK FROM CURB)

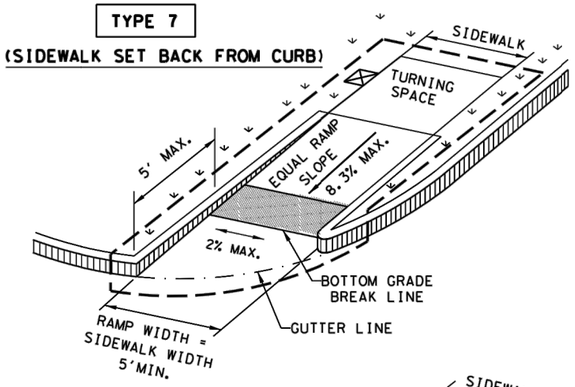


CROSS SLOPE NOT TO EXCEED 2% ON ANY PORTION OF RAMP, TURNING SPACE OR TRANSITION TO STREET.

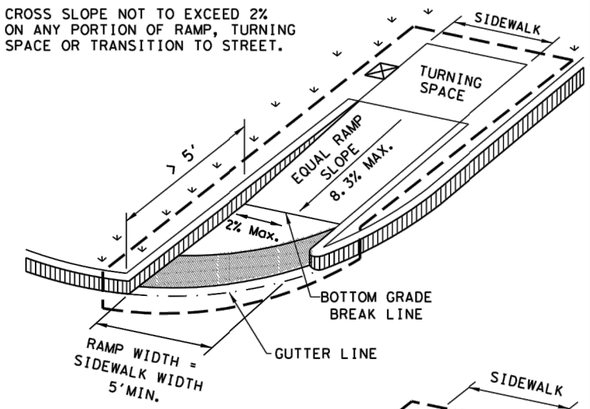


TYPE 10

(SIDEWALK ADJACENT TO CURB)

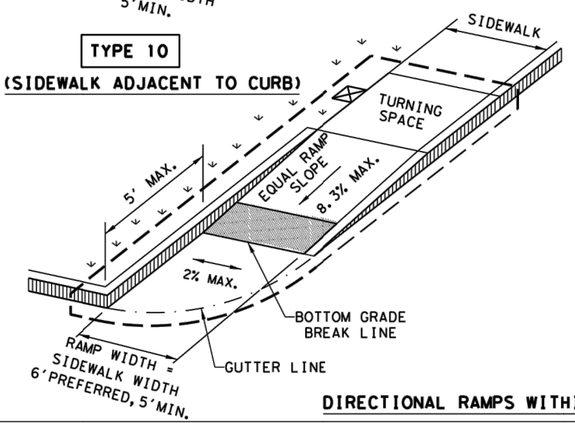


CROSS SLOPE NOT TO EXCEED 2% ON ANY PORTION OF RAMP, TURNING SPACE OR TRANSITION TO STREET.

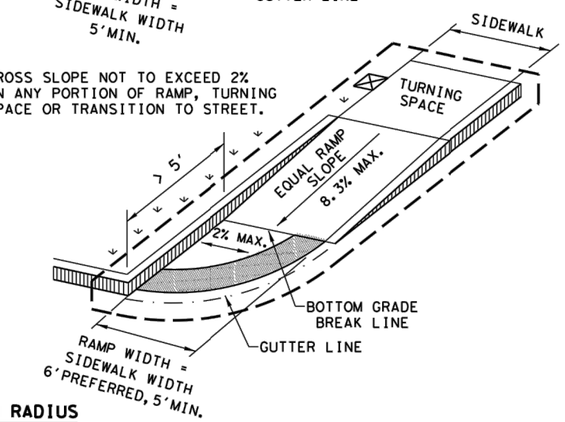


DIRECTIONAL RAMPS WITHIN RADIUS

TYPE 5

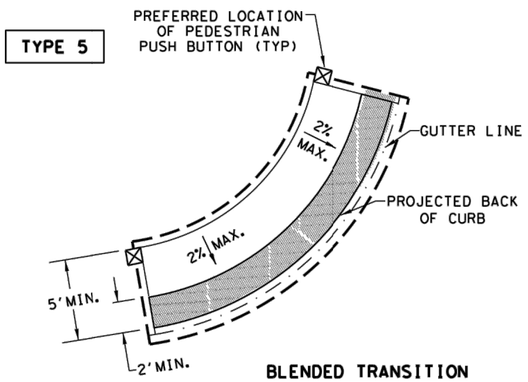


BLENDED TRANSITION
(FLUSH LANDING)

TYPE 21

INSTALL DETECTABLE WARNING SURFACE AT EACH END OF THE CUT-THROUGH RAMP WITH A MINIMUM 2' USUAL SIDEWALK SURFACE BETWEEN. IF MEDIAN IS LESS THAN 6' WIDE, ELIMINATE DETECTABLE WARNING SURFACES.

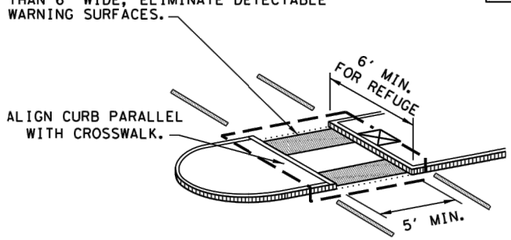


NOTE: CURB DETAILS ARE SHOWN ELSEWHERE IN THE PLANS.

TYPE 22

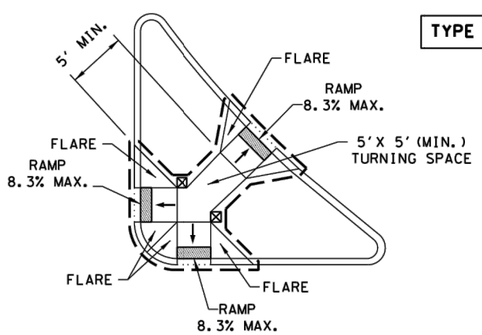


COMBINATION ISLAND RAMPS

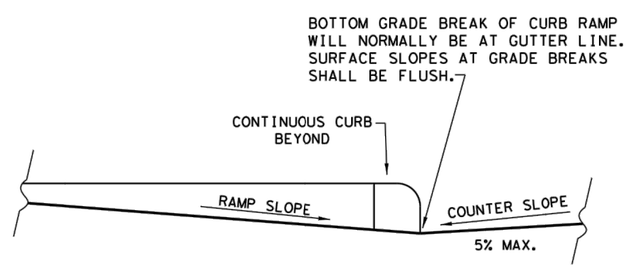


TYPICAL SECTION OF PERPENDICULAR CURB RAMP AT CONNECTION TO ROADWAY

**NOTES / LEGEND:**

SEE GENERAL NOTES ON SHEET 2 OF 4 FOR MORE INFORMATION.

DENOTES PLANTING OR NON-WALKING SURFACE NOT PART OF PEDESTRIAN CIRCULATION PATH.

GUTTER LINE

DETECTABLE WARNING SURFACE

GRADE BREAK

DENOTES PREFERRED LOCATION OF PEDESTRIAN PUSH BUTTON IF APPLICABLE.

RAMP LIMITS OF PAYMENT

SHEET 1 OF 4

Texas Department of Transportation — Design Division Standard

# PEDESTRIAN FACILITIES CURB RAMPS

# PED-18

| | | | | |
|---|---|---|---|---|
| FILE: ped18 | DN: TxDOT | DW: VP | CK: KM | CK: PK & JG |
| © TxDOT: MARCH, 2002 | CONT | SECT | JOB | HIGHWAY |
| REVISIONS REVISED 08,2005 REVISED 06,2012 REVISED 01,2018 | DIST | COUNTY | | SHEET NO. 24 |

DATE:
FILE:

DISCLAIMER:
The use of this standard is governed by the "Texas Engineering Practice Act". No warranty of any kind is made by TxDOT for any purpose whatsoever. TxDOT assumes no responsibility for the conversion of this standard to other formats or for incorrect results or damages resulting from its use.

# GENERAL NOTES

## CURB RAMPS

1. Install a curb ramp or blended transition at each pedestrian street crossing.
2. All slopes shown are maximum allowable. Cross slopes of 1.5% and lesser running should be used. Adjust curb ramp length or grade of approach sidewalks as directed.
3. Maximum allowable cross slope on sidewalk and curb ramp surfaces is 2%.
4. The minimum sidewalk width is 5'. Where the sidewalk is adjacent to the back of curb, a 6' sidewalk width is desirable. Where a 5' sidewalk cannot be provided due to site constraints, sidewalk width may be reduced to 4' for short distances. 5'x 5' passing areas at intervals not to exceed 200' are required.
5. Turning Spaces shall be 5'x 5' minimum. Cross slope shall be maximum 2%.
6. Clear space at the bottom of curb ramps shall be a minimum of 4'x 4' wholly contained within the crosswalk and wholly outside the parallel vehicular travel path.
7. Provide flared sides where the pedestrian circulation path crosses the curb ramp. Flared sides shall be sloped at 10% maximum, measured parallel to the curb. Returned curbs may be used only where pedestrians would not normally walk across the ramp, either because the adjacent surface is planted, substantially obstructed, or otherwise protected.
8. Additional information on curb ramp location, design, light reflective value and texture may be found in the latest draft of the Proposed Guidelines for Pedestrian Facilities in the Public Right of Way (PROWAG) as published by the U.S. Architectural and Transportation Barriers Compliance Board (Access Board).
9. To serve as a pedestrian refuge area, the median should be a minimum of 6' wide, measured from back of curbs. Medians should be designed to provide accessible passage over or through them.
10. Small channelization islands, which do not provide a minimum 5'x 5' landing at the top of curb ramps, shall be cut through level with the surface of the street.
11. Crosswalk dimensions, crosswalk markings and stop bar locations shall be as shown elsewhere in the plans. At intersections where crosswalk markings are not required, curb ramps shall align with theoretical crosswalks unless otherwise directed.
12. Provide curb ramps to connect the pedestrian access route at each pedestrian street crossing. Handrails are not required on curb ramps.
13. Curb ramps and landings shall be constructed and paid for in accordance with Item 531 "Sidewalks".
14. Place concrete at a minimum depth of 5" for ramps, flares and landings, unless otherwise directed.
15. Furnish and install No. 3 reinforcing steel bars at 18" o.c. both ways, unless otherwise directed.
16. Provide a smooth transition where the curb ramps connect to the street.
17. Curbs shown on sheet 1 within the limits of payment are considered part of the curb ramp for payment, whether it is concrete curb, gutter, or combined curb and gutter.
18. Existing features that comply with applicalble standards may remain in place unless otherwise shown on the plans.

## DETECTABLE WARNING MATERIAL

19. Curb ramps must contain a detectable warning surface that consists of raised truncated domes complying with PROWAG. The surface must contrast visually with adjoining surfaces, including side flares. Furnish and install an approved cast-in-place dark brown or dark red detectable warning surface material adjacent to uncolored concrete, unless specified elsewhere in the plans.
20. Detectable Warning Materials must meet TxDOT Departmental Materials Specification DMS 4350 and be listed on the Material Producer List. Install products in accordance with manufacturer's specifications.
21. Detectable warning surfaces must be firm, stable and slip resistant.
22. Detectable warning surfaces shall be a minimum of 24 inches in depth in the direction of pedestrian travel, and extend the full width of the curb ramp or landing where the pedestrian access route enters the street.
23. Detectable warning surfaces shall be located so that the edge nearest the curb line is at the back of curb and neither end of that edge is greater than 5 feet from the back of curb. Detectable warning surfaces may be curved along the corner radius.
24. Shaded areas on Sheet 1 of 4 indicate the approximate location for the detectable warning surface for each curb ramp type.

## DETECTABLE WARNING PAVERS (IF USED)

25. Furnish detectable warning paver units meeting all requirements of ASTM C-936, C-33. Lay in a two by two unit basket weave pattern or as directed.
26. Lay full-size units first followed by closure units consisting of at least 25 percent (25%) of a full unit. Cut detectable warning paver units using a power saw.

## SIDEWALKS

27. Provide clear ground space at operable parts, including pedestrian push buttons. Operable parts shall be placed within unobstructed reach range specified in PROWAG section R406.
28. Place traffic signal or illumination poles, ground boxes, controller boxes, signs, drainage facilities and other items so as not to obstruct the pedestrian access route or clear ground space.
29. Street grades and cross slopes shall be as shown elsewhere in the plans.
30. Changes in level greater than 1/4 inch are not permitted.
31. The least possible grade should be used to maximize accessibility. The running slope of sidewalks and crosswalks within the public right of way may follow the grade of the parallel roadway. Where a continuous grade greater than five percent (5%) must be provided, handrails may be desirable to improve accessibility. Handrails may also be needed to protect pedestrians from potentially hazardous conditions. If provided, handrails shall comply with PROWAG R409.
32. Handrail extensions shall not protrude into the usable landing area or into intersecting pedestrian routes.
33. Driveways and turnouts shall be constructed and paid for in accordance with Item "Intersections, Driveways and Turnouts". Sidewalks shall be constructed and paid for in accordance with Item, "Sidewalks".
34. Sidewalk details are shown elsewhere in the plans.

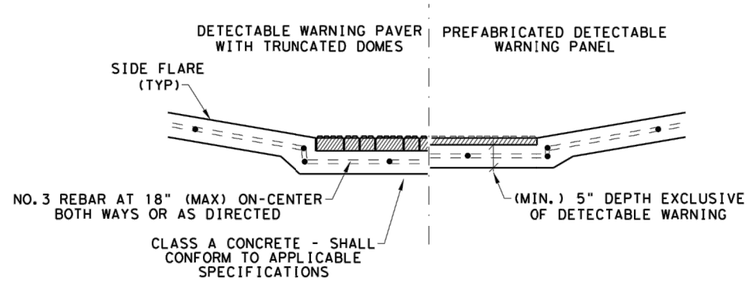


**SECTION VIEW DETAIL**
**CURB RAMP AT DETECTIBLE WARNINGS**

## DETECTABLE WARNING SURFACE DETAILS

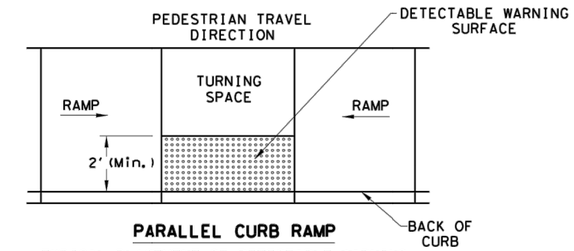


**PARALLEL CURB RAMP**

**TYPICAL PLACEMENT OF DETECTABLE WARNING SURFACE ON LANDING AT STREET EDGE.**

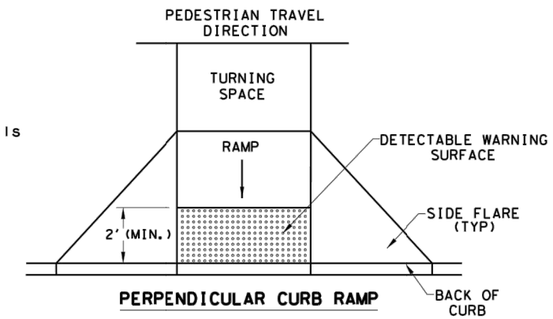


**PERPENDICULAR CURB RAMP**

**TYPICAL PLACEMENT OF DETECTABLE WARNING SURFACE ON SLOPING RAMP RUN.**

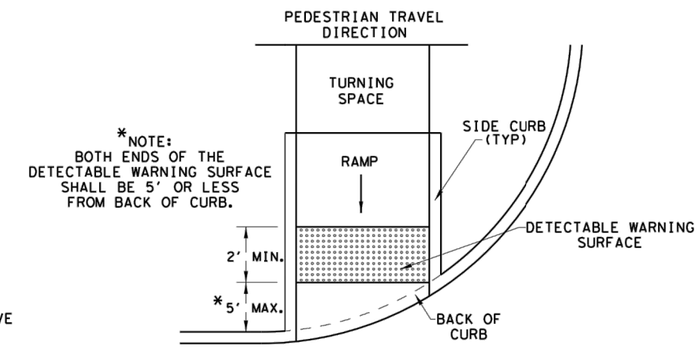


**DIRECTIONAL CURB RAMP**

TYPICAL PLACEMENT OF DETECTABLE WARNING SURFACE ON SLOPING RAMP RUN.

SHEET 2 OF 4

Texas Department of Transportation — Design Division Standard

# PEDESTRIAN FACILITIES CURB RAMPS

# PED-18

| | | | | |
|---|---|---|---|---|
| FILE: ped18 | DN: TxDOT | DW: VP | CK: KM | CK: PK & JG |
| © TxDOT: MARCH, 2002 | CONT | SECT | JOB | HIGHWAY |
| REVISIONS REVISED 08, 2005 REVISED 06, 2012 REVISED 01, 2018 | DIST | COUNTY | | SHEET NO. 25 |

DATE:
FILE:

DISCLAIMER:
The use of this standard is governed by the "Texas Engineering Practice Act". No warranty of any kind is made by TxDOT for any purpose whatsoever. TxDOT assumes no responsibility for the conversion of this standard to other formats or for incorrect results or damages resulting from its use.

## SIDEWALK TREATMENT AT DRIVEWAYS

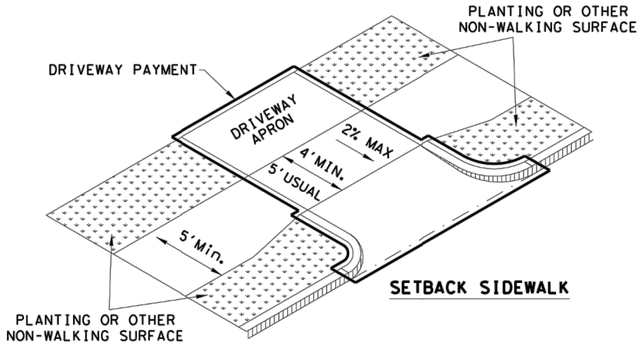


SETBACK SIDEWALK

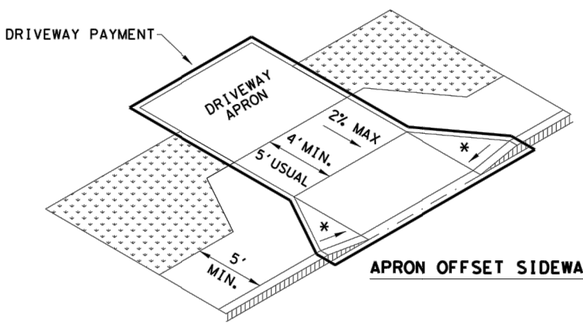


APRON OFFSET SIDEWALK

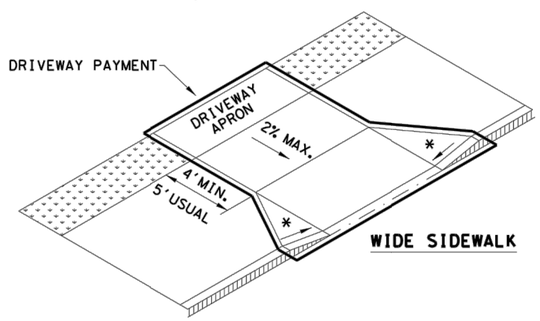


WIDE SIDEWALK

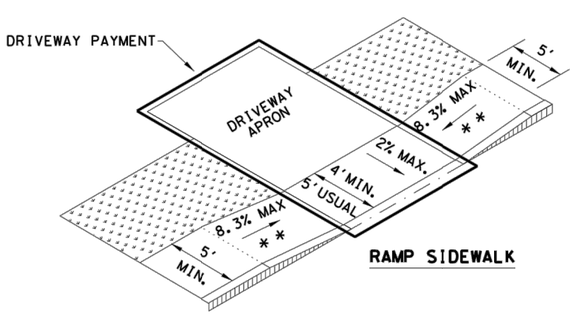


RAMP SIDEWALK

NOTES:

* WHERE DRIVEWAYS CROSS THE PEDESTRIAN ROUTE, SIDES SHALL BE FLARED AT 10% MAX SLOPE.

* * IF CURB HEIGHT IS GREATER THAN 6 INCHES, USE GRADE LESS THAN OR EQUAL TO 5%. HANDRAIL AND DETECTABLE WARNING ARE NOT REQUIRED.

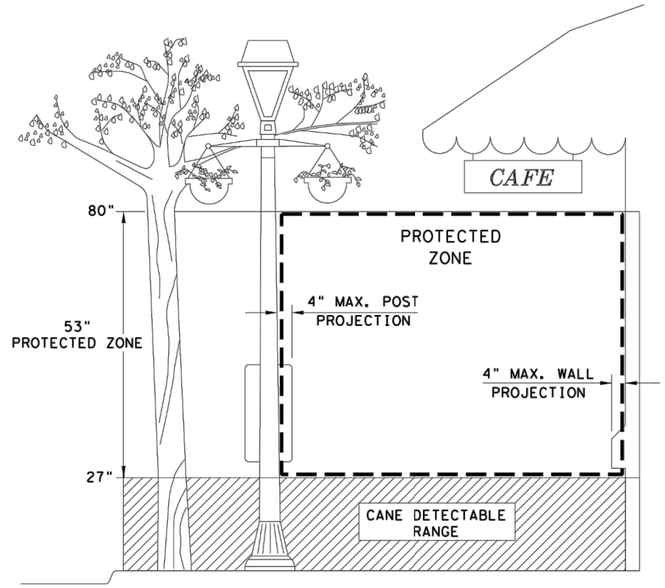


PROTECTED ZONE

NOTE: IN PEDESTRIAN CIRCULATION AREA, MAXIMUM 4" PROJECTION FOR POST OR WALL MOUNTED OBJECTS BETWEEN 27" AND 80" ABOVE THE SURFACE.

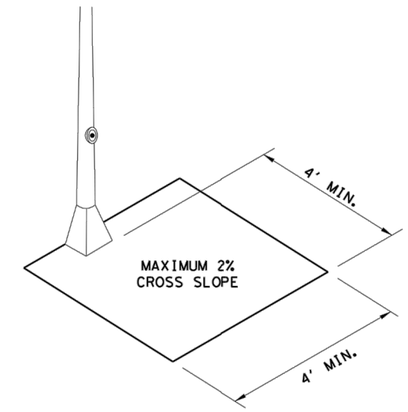


CLEAR SPACE ADJACENT TO PEDESTRIAN PUSH BUTTON

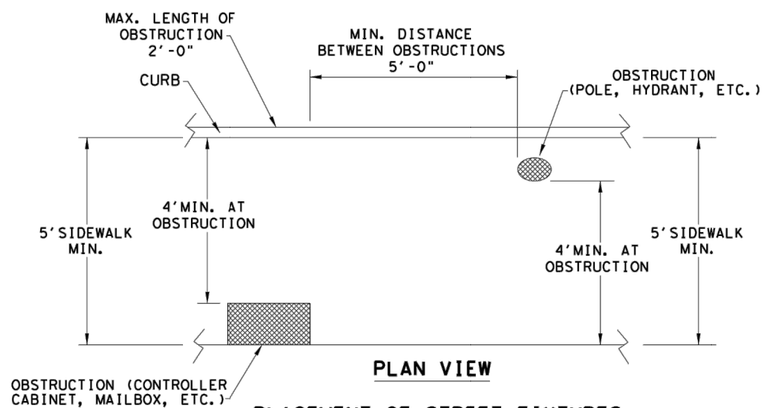


PLAN VIEW

PLACEMENT OF STREET FIXTURES

NOTE: ITEMS NOT INTENDED FOR PUBLIC USE. MINIMUM 4' X 4' CLEAR GROUND SPACE REQUIRED AT PUBLIC USE FIXTURES.

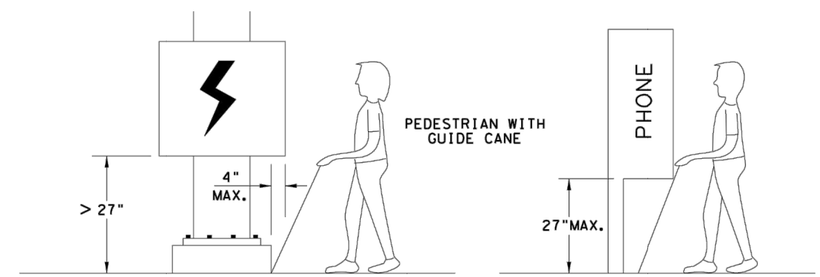


WHEN AN OBSTRUCTION OF A HEIGHT GREATER THAN 27" FROM THE SURFACE WOULD CREATE A PROTRUSION OF MORE THAN 4" INTO THE PEDESTRIAN CIRCULATION AREA, CONSTRUCT ADDITIONAL CURB OR FOUNDATION AT THE BOTTOM TO PROVIDE A MAXIMUM 4" OVERHANG.

PROTRUDING OBJECTS OF A HEIGHT ≤27" ARE DETECTABLE BY CANE AND DO NOT REQUIRE ADDITIONAL TREATMENT.

DETECTION BARRIER FOR VERTICAL CLEARANCE < 80"



Texas Department of Transportation — Design Division Standard

# PEDESTRIAN FACILITIES CURB RAMPS

# PED-18

| | | | | |
|---|---|---|---|---|
| FILE: ped18 | DN: TxDOT | DW: VP | CK: KM | CK: PK & JG |
| © TxDOT: MARCH, 2002 | CONT | SECT | JOB | HIGHWAY |
| REVISIONS REVISED 08, 2005 REVISED 06, 2012 REVISED 01, 2018 | DIST | COUNTY | | SHEET NO. 26 |

DATE:
FILE:

DISCLAIMER:
The use of this standard is governed by the "Texas Engineering Practice Act". No warranty of any kind is made by TxDOT for any purpose whatsoever. TxDOT assumes no responsibility for the conversion of this standard to other formats or for incorrect results or damages resulting from its use.

## TYPICAL CROSSING LAYOUTS

SEE SHEET 1 OF 4 FOR DETAILS AND DIMENSIONS

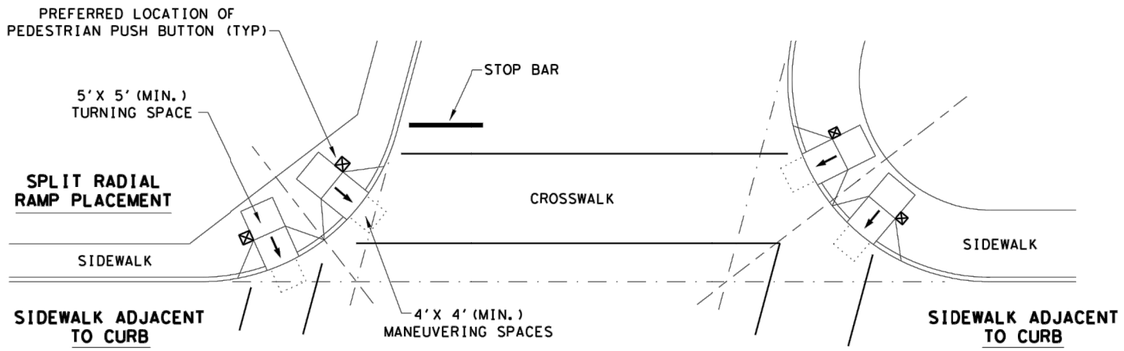


SKEWED INTERSECTION WITH "LARGE" RADIUS

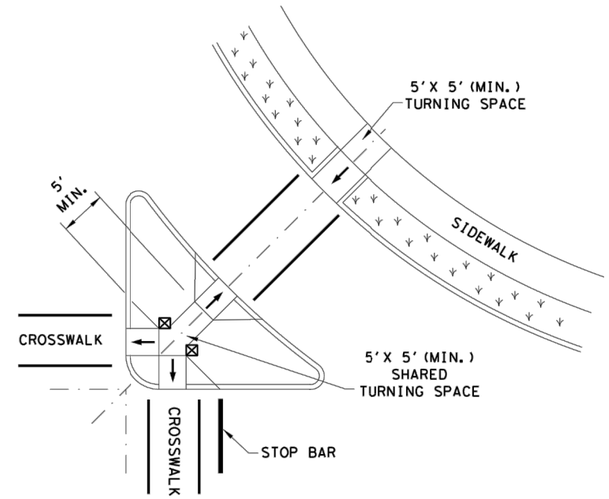


AT INTERSECTION
W/FREE RIGHT TURN & ISLAND

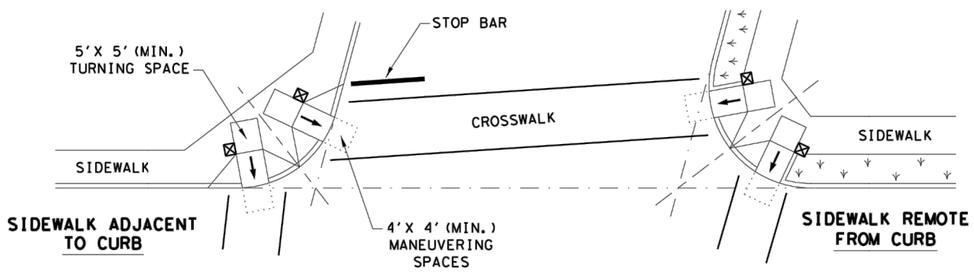


SKEWED INTERSECTION WITH "SMALL" RADIUS

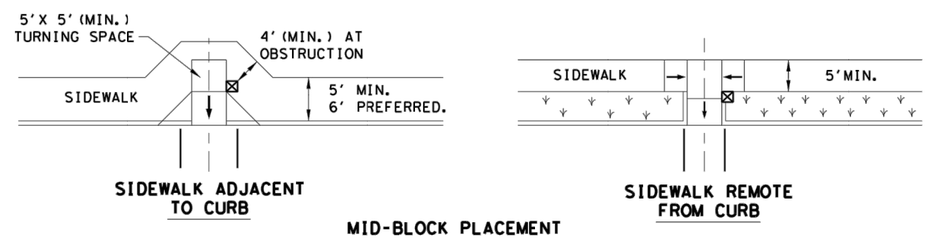


MID-BLOCK PLACEMENT
PERPENDICULAR RAMPS

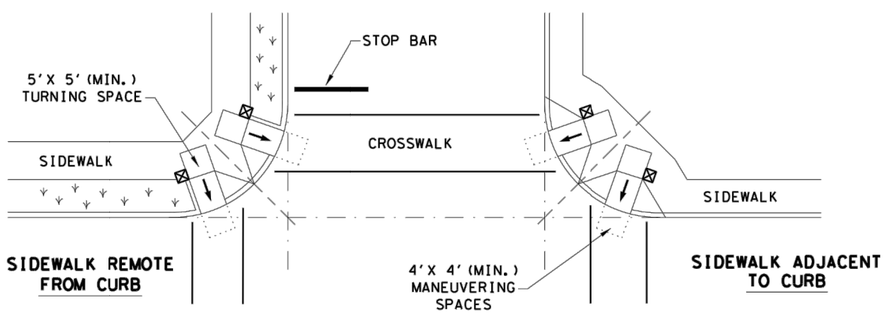


NORMAL INTERSECTION WITH "SMALL" RADIUS

**LEGEND:**

SHOWS DOWNWARD SLOPE. →

DENOTES PREFERRED LOCATION OF PEDESTRIAN PUSH BUTTON (IF APPLICABLE). ⊠

DENOTES PLANTING OR NON-WALKING SURFACE NOT PART OF PEDESTRIAN CIRCULATION PATH.

SHEET 4 OF 4

Texas Department of Transportation — Design Division Standard

# PEDESTRIAN FACILITIES CURB RAMPS

# PED-18

| | | | | |
|---|---|---|---|---|
| FILE: ped18 | DN: TxDOT | DW: VP | CK: KM | CK: PK & JG |
| © TxDOT: MARCH, 2002 | CONT | SECT | JOB | HIGHWAY |
| REVISIONS | | | | |
| REVISED 08, 2005<br>REVISED 06, 2012<br>REVISED 01, 2018 | DIST | COUNTY | | SHEET NO. |
| | | | | 27 |

DATE:
FILE:

DISCLAIMER:
The use of this standard is governed by the "Texas Engineering Practice Act". No warranty of any kind is made by TxDOT for any purpose whatsoever. TxDOT assumes no responsibility for the conversion of this standard to other formats or for incorrect results or damages resulting from its use.

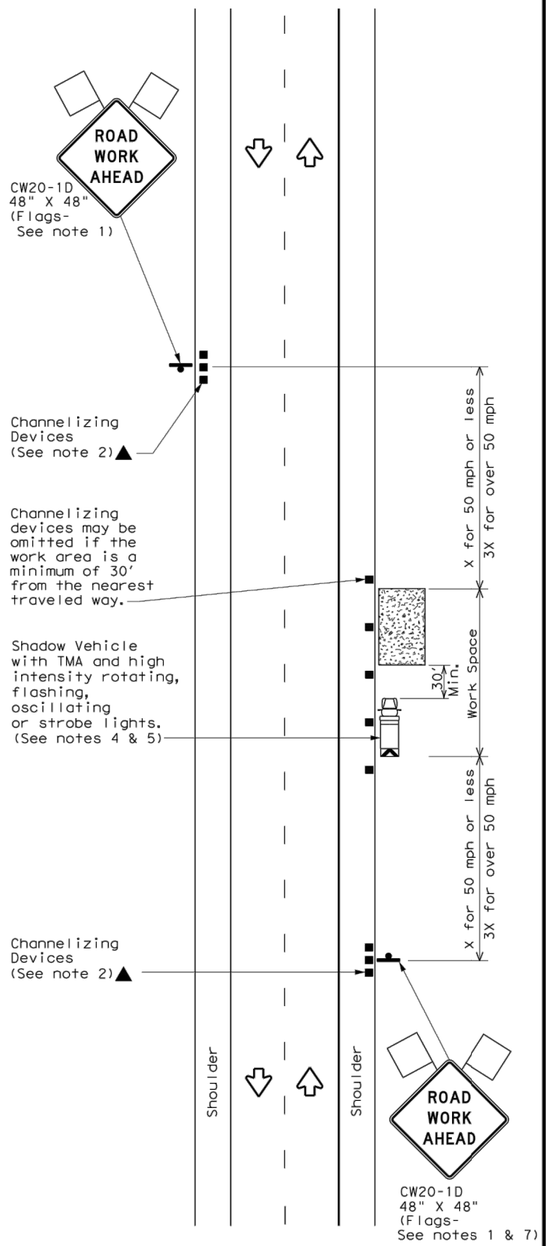


TCP (1-1a)

## WORK SPACE NEAR SHOULDER

Conventional Roads

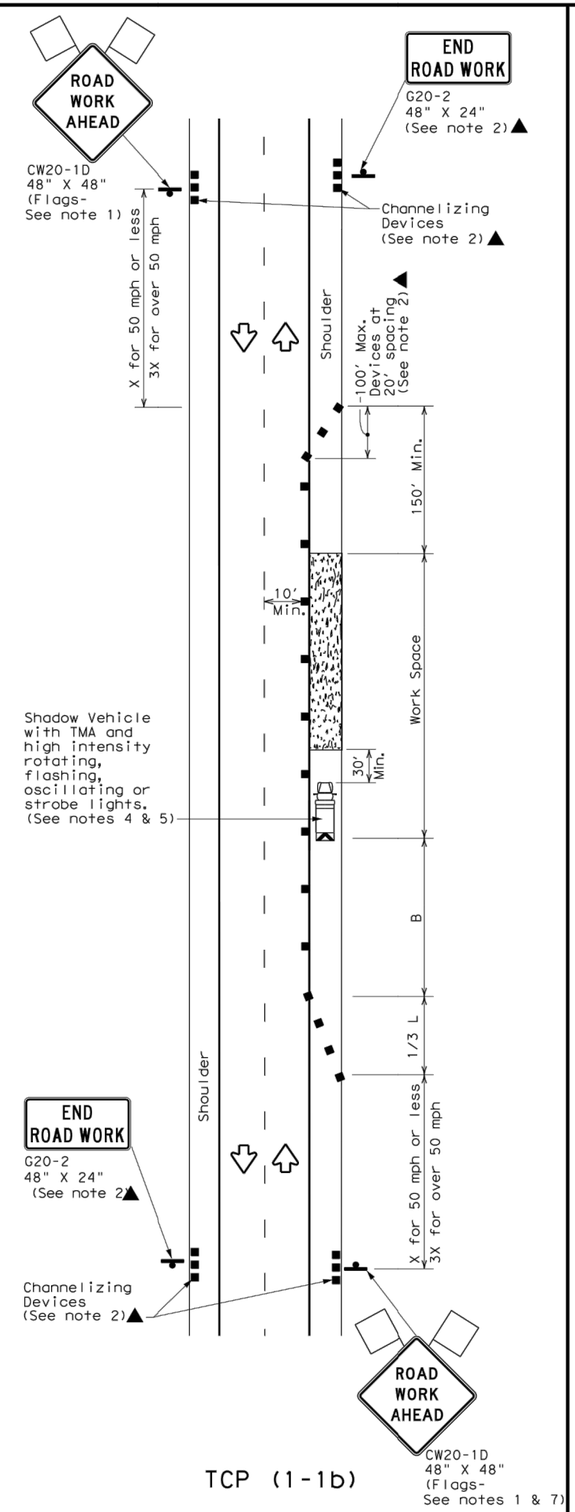


TCP (1-1b)

## WORK SPACE ON SHOULDER

Conventional Roads

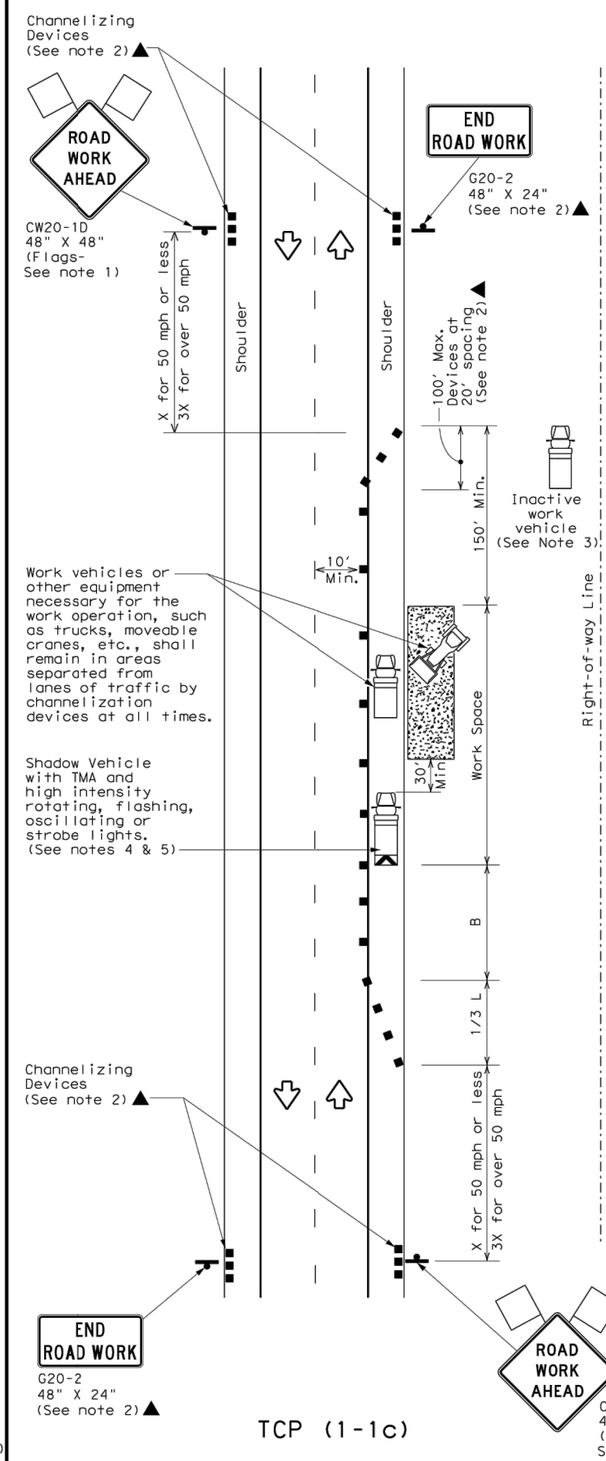


TCP (1-1c)

## WORK VEHICLES ON SHOULDER

Conventional Roads

| LEGEND | | | |
|---|---|---|---|
| | Type 3 Barricade | | Channelizing Devices |
| | Heavy Work Vehicle | | Truck Mounted Attenuator (TMA) |
| | Trailer Mounted Flashing Arrow Board | M | Portable Changeable Message Sign (PCMS) |
| | Sign | | Traffic Flow |
| | Flag | | Flagger |

| Posted Speed * | Formula | Minimum Desirable Taper Lengths ** | | | Suggested Maximum Spacing of Channelizing Devices | | Minimum Sign Spacing "X" Distance | Suggested Longitudinal Buffer Space "B" |
|---|---|---|---|---|---|---|---|---|
| | | 10' Offset | 11' Offset | 12' Offset | On a Taper | On a Tangent | | |
| 30 | $L = \frac{WS^2}{60}$ | 150' | 165' | 180' | 30' | 60' | 120' | 90' |
| 35 | | 205' | 225' | 245' | 35' | 70' | 160' | 120' |
| 40 | | 265' | 295' | 320' | 40' | 80' | 240' | 155' |
| 45 | L = WS | 450' | 495' | 540' | 45' | 90' | 320' | 195' |
| 50 | | 500' | 550' | 600' | 50' | 100' | 400' | 240' |
| 55 | | 550' | 605' | 660' | 55' | 110' | 500' | 295' |
| 60 | | 600' | 660' | 720' | 60' | 120' | 600' | 350' |
| 65 | | 650' | 715' | 780' | 65' | 130' | 700' | 410' |
| 70 | | 700' | 770' | 840' | 70' | 140' | 800' | 475' |
| 75 | | 750' | 825' | 900' | 75' | 150' | 900' | 540' |

* Conventional Roads Only

** Taper lengths have been rounded off.

L=Length of Taper(FT) W=Width of Offset(FT) S=Posted Speed(MPH)

| TYPICAL USAGE | | | | |
|---|---|---|---|---|
| MOBILE | SHORT DURATION | SHORT TERM STATIONARY | INTERMEDIATE TERM STATIONARY | LONG TERM STATIONARY |
| | ✓ | ✓ | | |

## GENERAL NOTES

1. Flags attached to signs where shown are REQUIRED.
2. All traffic control devices illustrated are REQUIRED, except those denoted with the triangle symbol may be omitted when stated elsewhere in the plans, or for routine maintenance work, when approved by the Engineer.
3. Inactive work vehicles or other equipment should be parked near the right-of-way line and not parked on the paved shoulder.
4. A Shadow Vehicle with a TMA should be used anytime it can be positioned 30 to 100 feet in advance of the area of crew exposure without adversely affecting the performance or quality of the work. If workers are no longer present but road or work conditions require the traffic control to remain in place, Type 3 Barricades or other channelizing devices may be substituted for the Shadow Vehicle and TMA.
5. Additional Shadow Vehicles with TMAs may be positioned off the paved surface, next to those shown in order to protect wider work spaces.
6. See TCP(5-1)for shoulder work on divided highways, expressways and freeways.
7. CW21-5 "SHOULDER WORK" signs may be used in place of CW20-1D "ROAD WORK AHEAD" signs for shoulder work on conventional roadways.

Texas Department of Transportation

Traffic Operations Division Standard

# TRAFFIC CONTROL PLAN CONVENTIONAL ROAD SHOULDER WORK

# TCP(1-1)-18

| FILE: tcp1-1-18.dgn | DN: | CK: | DW: | CK: |
|---|---|---|---|---|
| ©TxDOT December 1985 | CONT | SECT | JOB | HIGHWAY |
| REVISIONS 2-94 4-98 8-95 2-12 1-97 2-18 | DIST | | COUNTY | SHEET NO. 28 |

DATE:
FILE:

151

DISCLAIMER:
The use of this standard is governed by the "Texas Engineering Practice Act". No warranty of any kind is made by TxDOT for any purpose whatsoever. TxDOT assumes no responsibility for the conversion of this standard to other formats or for incorrect results or damages resulting from its use.

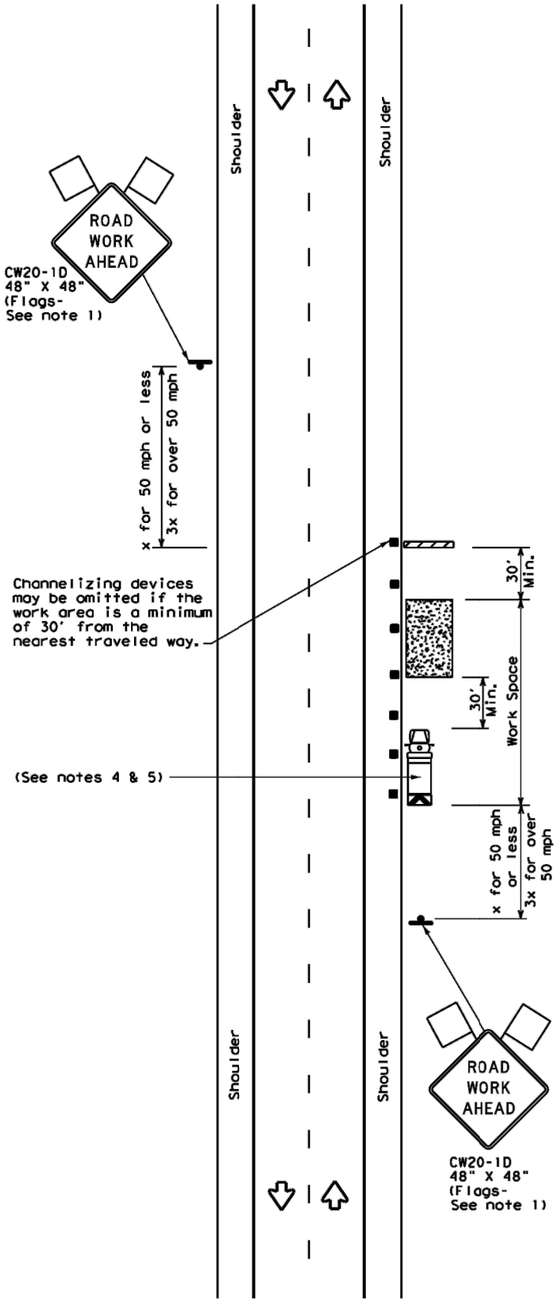


TCP (2-1a)

## WORK SPACE NEAR SHOULDER

Conventional Roads

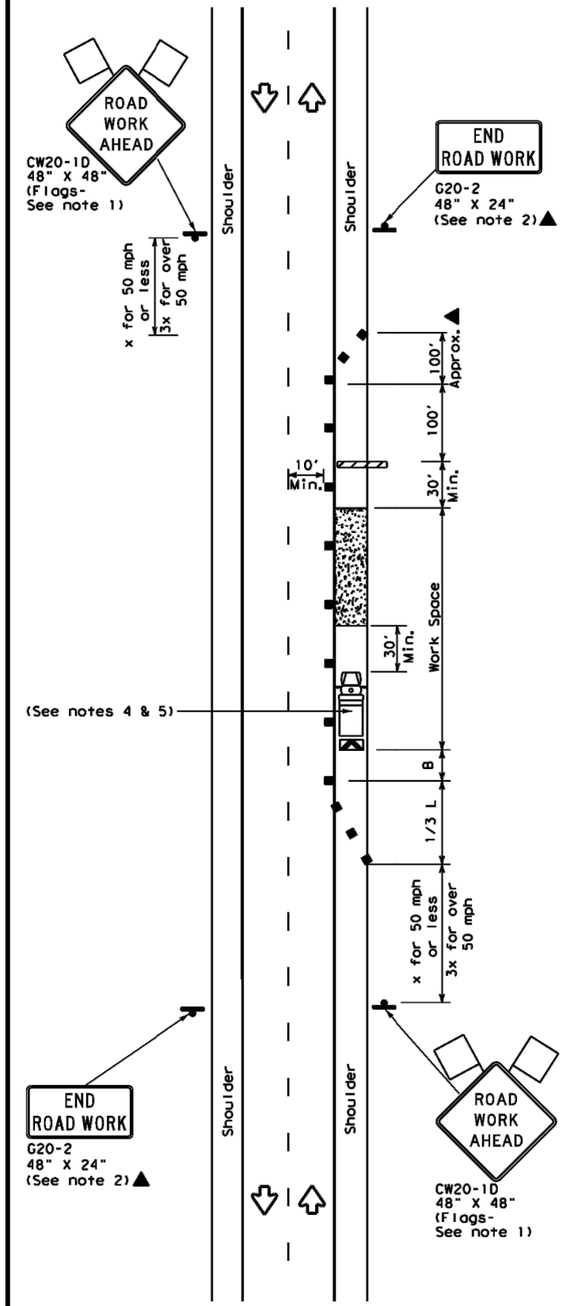


TCP (2-1b)

## WORK SPACE ON SHOULDER

Conventional Roads

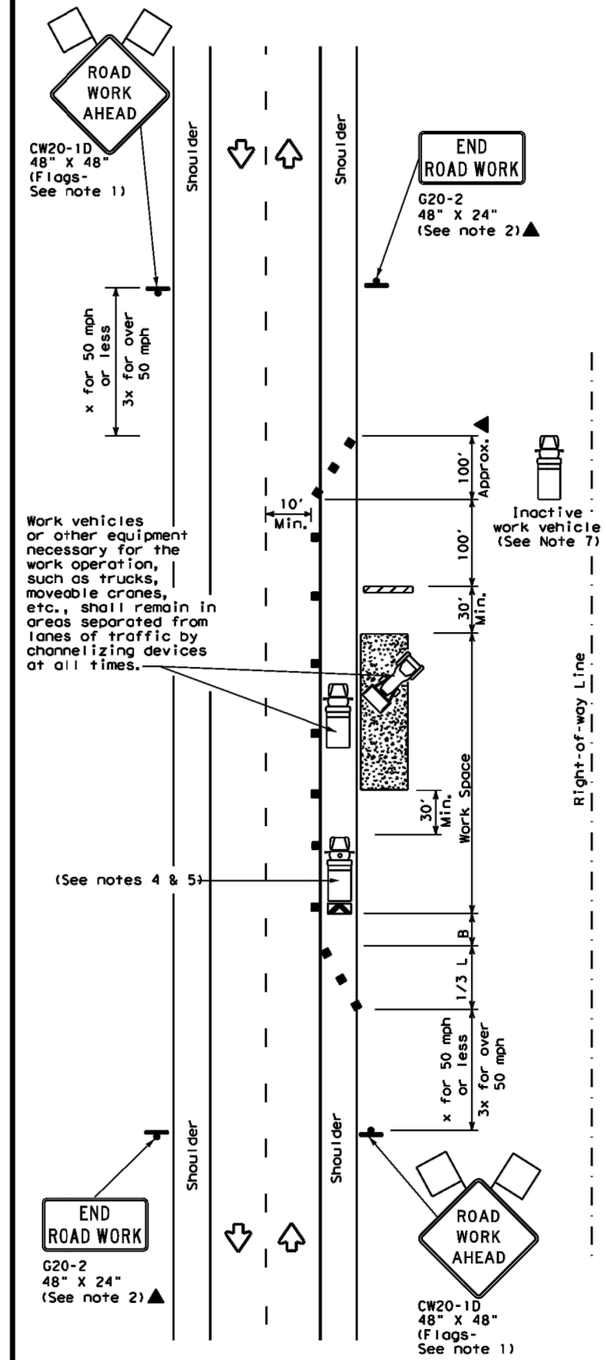


TCP (2-1c)

## WORK VEHICLES ON SHOULDER

Conventional Roads

### LEGEND

| | | | |
|---|---|---|---|
| | Type 3 Barricade | | Channelizing Devices |
| | Heavy Work Vehicle | | Truck Mounted Attenuator (TMA) |
| | Trailer Mounted Flashing Arrow Board | | Portable Changeable Message Sign (PCMS) |
| | Sign | | Traffic Flow |
| | Flag | | Flagger |

| Posted Speed * | Formula | Minimum Desirable Taper Lengths ** | | | Suggested Maximum Spacing of Channelizing Devices | | Minimum Sign Spacing "X" Distance | Suggested Longitudinal Buffer Space "B" |
|---|---|---|---|---|---|---|---|---|
| | | 10' Offset | 11' Offset | 12' Offset | On a Taper | On a Tangent | | |
| 30 | $L = \frac{WS^2}{60}$ | 150' | 165' | 180' | 30' | 60' | 120' | 90' |
| 35 | | 205' | 225' | 245' | 35' | 70' | 160' | 120' |
| 40 | | 265' | 295' | 320' | 40' | 80' | 240' | 155' |
| 45 | L = WS | 450' | 495' | 540' | 45' | 90' | 320' | 195' |
| 50 | | 500' | 550' | 600' | 50' | 100' | 400' | 240' |
| 55 | | 550' | 605' | 660' | 55' | 110' | 500' | 295' |
| 60 | | 600' | 660' | 720' | 60' | 120' | 600' | 350' |
| 65 | | 650' | 715' | 780' | 65' | 130' | 700' | 410' |
| 70 | | 700' | 770' | 840' | 70' | 140' | 800' | 475' |
| 75 | | 750' | 825' | 900' | 75' | 150' | 900' | 540' |

* Conventional Roads Only

** Taper lengths have been rounded off.
L=Length of Taper(FT) W=Width of Offset(FT) S=Posted Speed(MPH)

### TYPICAL USAGE

| MOBILE | SHORT DURATION | SHORT TERM STATIONARY | INTERMEDIATE TERM STATIONARY | LONG TERM STATIONARY |
|---|---|---|---|---|
| | ✓ | ✓ | ✓ | ✓ |

### GENERAL NOTES

1. Flags attached to signs where shown, are REQUIRED.
2. All traffic control devices illustrated are REQUIRED, except those denoted with the triangle symbol may be omitted when stated in the plans, or for routine maintenance work, when approved by the Engineer.
3. Stockpiled material should be placed a minimum of 30 feet from nearest traveled way.
4. Shadow Vehicle with TMA and high intensity rotating, flashing, oscillating or strobe lights. A Shadow Vehicle with a TMA should be used anytime it can be positioned 30 to 100 feet in advance of the area of crew exposure without adversely affecting the performance or quality of the work. If workers are no longer present but road or work conditions require the traffic control to remain in place, Type 3 Barricades or other channelizing devices may be substituted for the Shadow Vehicle and TMA.
5. Additional Shadow Vehicles with TMAs may be positioned off the paved surface, next to those shown in order to protect a wider work space.
6. See TCP(5-1) for shoulder work on divided highways, expressways and freeways.
7. Inactive work vehicles or other equipment should be parked near the right-of-way line and not parked on the paved shoulder.
8. CW21-5 "SHOULDER WORK" signs may be used in place of CW20-1D "ROAD WORK AHEAD" signs for shoulder work on conventional roadways.

Texas Department of Transportation

Traffic Operations Division Standard

# TRAFFIC CONTROL PLAN CONVENTIONAL ROAD SHOULDER WORK

# TCP(2-1)-18

| FILE: tcp2-1-18.dgn | DN: | CK: | DW: | CK: |
|---|---|---|---|---|
| ©TxDOT December 1985 | CONT | SECT | JOB | HIGHWAY |
| REVISIONS 2-94 4-98 8-95 2-12 1-97 2-18 | DIST | COUNTY | | SHEET NO. 29 |

DATE:
FILE:

161

DISCLAIMER:
The use of this standard is governed by the "Texas Engineering Practice Act". No warranty of any kind is made by TxDOT for any purpose whatsoever. TxDOT assumes no responsibility for the conversion of this standard to other formats or for incorrect results or damages resulting from its use.

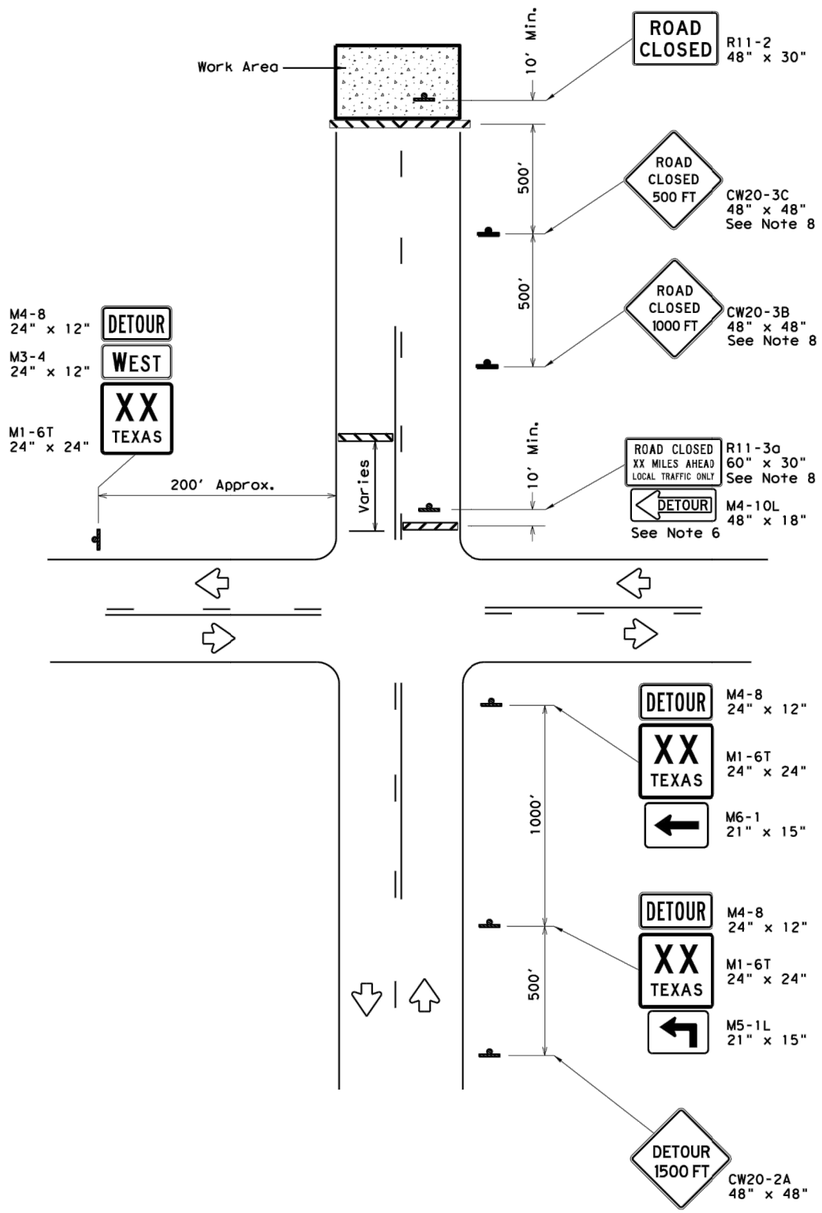


## ROAD CLOSURE BEYOND THE INTERSECTION

Signing for a Numbered Route with an Off-Site Detour

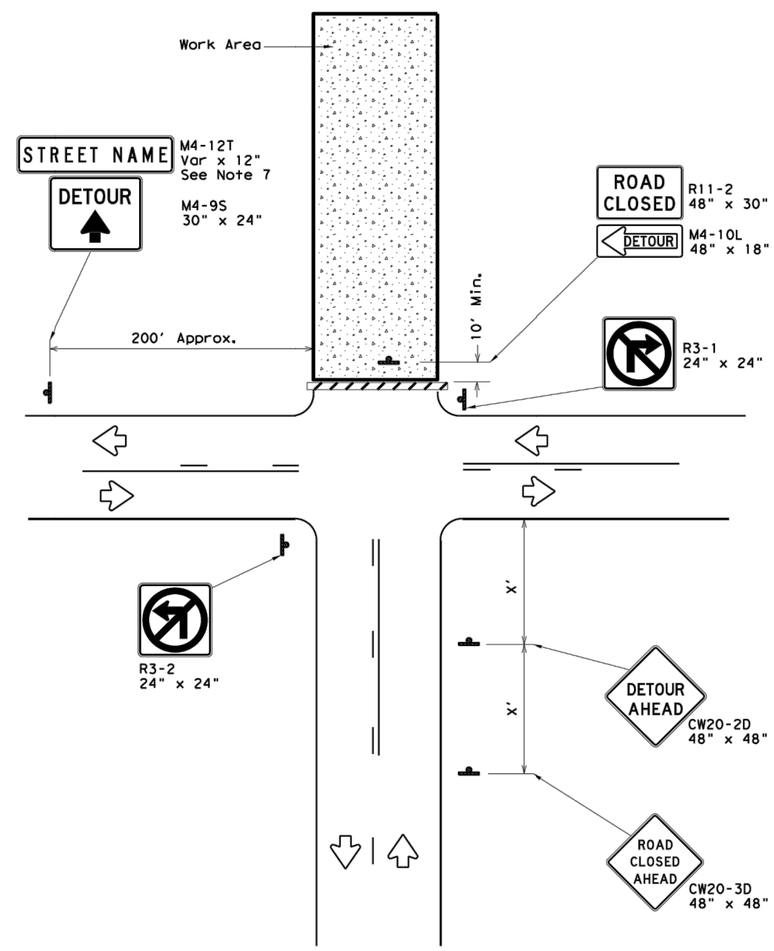


## ROAD CLOSURE AT THE INTERSECTION

Signing for an Un-numbered Route with an Off-Site Detour

| LEGEND | |
|---|---|
| | Type 3 Barricade |
| | Sign |

| Posted Speed * | Minimum Sign Spacing "X" Distance |
|---|---|
| 30 | 120' |
| 35 | 160' |
| 40 | 240' |
| 45 | 320' |
| 50 | 400' |
| 55 | 500' |
| 60 | 600' |
| 65 | 700' |
| 70 | 800' |
| 75 | 900' |

* Conventional Roads Only

## GENERAL NOTES

1. This sheet is intended to provide details for temporary work zone road closures. For permanent road closure details see the D&OM standards.
2. Barricades used shall meet the requirements shown on Barricade and Construction Standard BC(10) and listed on the Compliant Work Zone Traffic Control Devices list (CWZTCD).
3. Stockpiled materials shall not be placed on the traffic side of barricades.
4. Barricades at the road closure should extend from pavement edge to pavement edge.
5. Detour signing shown is intended to illustrate the type of signing that is appropriate for numbered routes or un-numbered routes as labeled. It does not indicate the full extent of detour signing required. Detour routes should be signed as shown elsewhere in the plans.
6. If the road is open for a significant distance beyond the intersection or there are significant origin/destination points beyond the intersection, the signs and barricades at this location should be located at the edge of the traveled way.
7. The Street Name (M4-12T) sign is to be placed above the DETOUR (M4-9S) sign.
8. For urban areas where there is a shorter distance between the intersection and the actual closure location, the ROAD CLOSED XX MILES AHEAD (R11-3a) sign may be replaced with a ROAD CLOSED TO THRU TRAFFIC (R11-4) sign. If adequate space does not exist between the intersection and the closure a single ROAD CLOSED AHEAD (CW20-3D) sign spaced as per the table above may replace the ROAD CLOSED 1000 FT (CW20-3B) and ROAD CLOSED 500 FT (CW20-3C) signs.
9. Signs and barricades shown shall be subsidiary to Item 502. Locations where these details will be required shall be as shown elsewhere in the plans.

Texas Department of Transportation

Traffic Operations Division Standard

# WORK ZONE ROAD CLOSURE DETAILS

## WZ(RCD)-13

| FILE: wzrcd-13.dgn | DN: TxDOT | CK: TxDOT | DW: TxDOT | CK: TxDOT |
|---|---|---|---|---|
| © TxDOT August 1995 | CONT | SECT | JOB | HIGHWAY |
| REVISIONS | | | | |
| 1-97 4-98 7-13 | DIST | COUNTY | | SHEET NO. |
| 2-98 3-03 | | | | 30 |

DATE:
FILE:

## BARRICADE AND CONSTRUCTION (BC) STANDARD SHEETS GENERAL NOTES:

1. The Barricade and Construction Standard Sheets (BC sheets) are intended to show typical examples for placement of temporary traffic control devices, construction pavement markings, and typical work zone signs. The information contained in these sheets meet or exceed the requirements shown in the "Texas Manual on Uniform Traffic Control Devices" (TMUTCD).

2. The development and design of the Traffic Control Plan (TCP)is the responsibility of the Engineer.

3. The Contractor may propose changes to the TCP that are signed and sealed by a licensed professional engineer for approval. The Engineer may develop, sign and seal Contractor proposed changes.

4. The Contractor is responsible for installing and maintaining the traffic control devices as shown in the plans. The Contractor may not move or change the approximate location of any device without the approval of the Engineer.

5. Geometric design of lane shifts and detours should, when possible, meet the applicable design criteria contained in manuals such as the American Association of State Highway and Transportation Officials (AASHTO), "A Policy on Geometric Design of Highways and Streets," the TxDOT "Roadway Design Manual" or engineering judgment.

6. When projects abut, the Engineer(s) may omit the END ROAD WORK, TRAFFIC FINES DOUBLE, and other advance warning signs if the signing would be redundant and the work areas appear continuous to the motorists. If the adjacent project is completed first, the Contractor shall erect the necessary warning signs as shown on these sheets, the TCP sheets or as directed by the Engineer. The BEGIN ROAD WORK NEXT X MILES sign shall be revised to show appropriate work zone distance.

7. The Engineer may require duplicate warning signs on the median side of divided highways where median width will permit and traffic volumes justify the signing.

8. All signs shall be constructed in accordance with the details found in the "Standard Highway Sign Designs for Texas," latest edition. Sign details not shown in this manual shall be shown in the plans or the Engineer shall provide a detail to the Contractor before the sign is manufactured.

9. The temporary traffic control devices shown in the illustrations of the BC sheets are examples. As necessary, the Engineer will determine the most appropriate traffic control devices to be used.

10. As shown on BC(2), the OBEY WARNING SIGNS STATE LAW sign, STAY ALERT TALK OR TEXT LATER (see Sign Detail G20-10T) and the WORK ZONE TRAFFIC FINES DOUBLE sign with plaque shall be erected in advance of the CSJ limits. However, the TRAFFIC FINES DOUBLE sign will not be required on projects consisting solely of mobile operation work, such as striping or milling edgeline rumble strips. The BEGIN ROAD WORK NEXT X MILES, CONTRACTOR and END ROAD WORK signs shall be erected at or near the CSJ limits.

11. Except for devices required by Note 10, traffic control devices should be in place only while work is actually in progress or a definite need exists.

12. The Engineer has the final decision on the location of all traffic control devices.

13. Inactive equipment and work vehicles, including workers' private vehicles must be parked away from travel lanes. They should be as close to the right-of-way line as possible, or located behind a barrier or guardrail, or as approved by the Engineer.

## WORKER SAFETY APPAREL NOTES:

1. Workers on foot who are exposed to traffic or to construction equipment within the right-of-way shall wear high-visibility safety apparel meeting the requirements of ISEA "American National Standard for High-Visibility Apparel," or equivalent revisions, and labeled as ANSI 107-2004 standard performance for Class 2 or 3 risk exposure. Class 3 garments should be considered for high traffic volume work areas or night time work.

DISCLAIMER: The use of this standard is governed by the "Texas Engineering Practice Act". No warranty of any kind is made by TxDOT for any purpose whatsoever. TxDOT assumes no responsibility for the conversion of this standard to other formats or for incorrect results or damages resulting from its use.

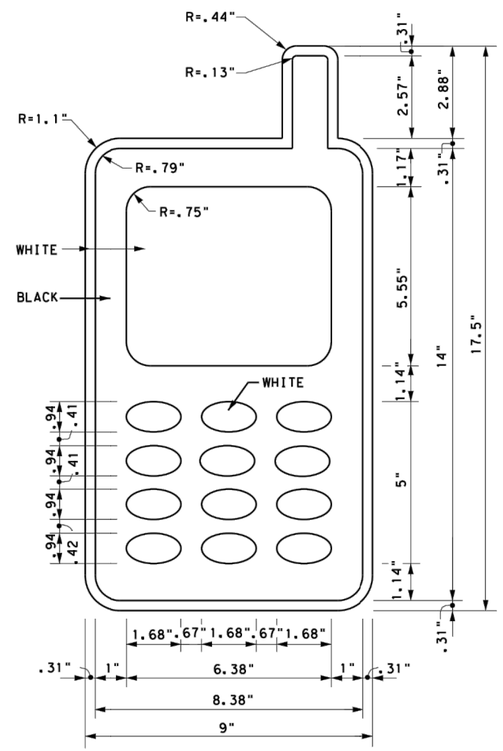


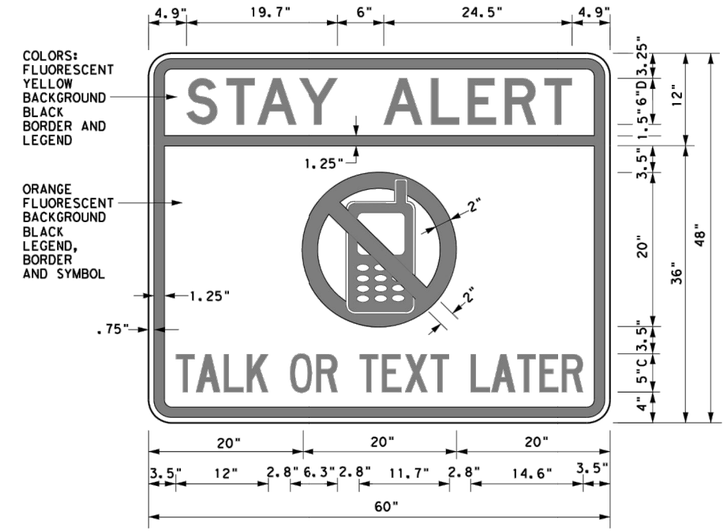


3.0" Radius, 1.25" Border, 0.75" Indent, Black on Yellow;
[STAY ALERT] Font: D
3.0" Radius, 1.25" Border, 0.75" Indent, Black on Orange;
[TALK OR TEXT LATER] Font: C specified length;

## SIGN DETAIL (G20-10T)

Only pre-qualified products shall be used. The "Compliant Work Zone Traffic Control Devices List" (CWZTCD) describes pre-qualified products and their sources and may be found on-line at the web address given below or by contacting:

Texas Department of Transportation
Traffic Operations Division - TE
Phone (512) 416-3118

| THE DOCUMENTS BELOW CAN BE FOUND ON-LINE AT http://www.txdot.gov |
|---|
| COMPLIANT WORK ZONE TRAFFIC CONTROL DEVICES LIST (CWZTCD) |
| DEPARTMENTAL MATERIAL SPECIFICATIONS (DMS) |
| MATERIAL PRODUCER LIST (MPL) |
| ROADWAY DESIGN MANUAL - SEE "MANUALS (ONLINE MANUALS)" |
| STANDARD HIGHWAY SIGN DESIGNS FOR TEXAS (SHSD) |
| TEXAS MANUAL ON UNIFORM TRAFFIC CONTROL DEVICES (TMUTCD) |
| TRAFFIC ENGINEERING STANDARD SHEETS |



Texas Department of Transportation — Traffic Operations Division Standard

# BARRICADE AND CONSTRUCTION GENERAL NOTES AND REQUIREMENTS

## BC(1)-14

| FILE: bc-14.dgn | DN: TxDOT | CK: TxDOT | DW: TxDOT | CK: TxDOT |
|---|---|---|---|---|
| ©TxDOT November 2002 | CONT | SECT | JOB | HIGHWAY |
| REVISIONS 4-03 5-10 8-14 9-07 7-13 | DIST | COUNTY | | SHEET NO. 31 |

DATE:
FILE:

DISCLAIMER:
The use of this standard is governed by the "Texas Engineering Practice Act". No warranty of any kind is made by TxDOT for any purpose whatsoever. TxDOT assumes no responsibility for the conversion of this standard to other formats or for incorrect results or damages resulting from its use.

## TYPICAL LOCATION OF CROSSROAD SIGNS

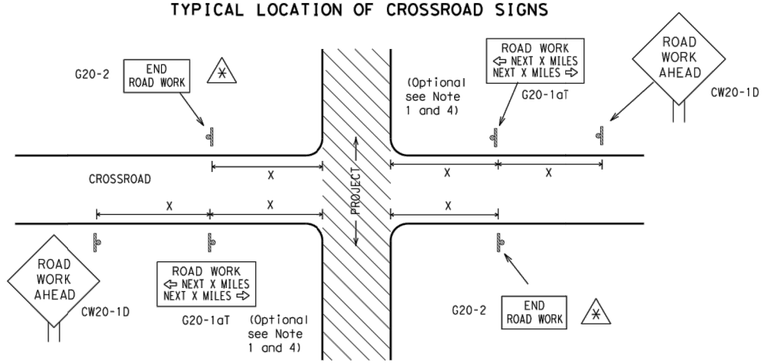


(*) May be mounted on back of "ROAD WORK AHEAD"(CW20-1D) sign with approval of Engineer. (See note 2 below)

1. The typical minimum signing on a crossroad approach should be a "ROAD WORK AHEAD" (CW20-1D)sign and a (G20-2) "END ROAD WORK" sign, unless noted otherwise in plans.
2. The Engineer may use the reduced size 36" x 36" ROAD WORK AHEAD (CW20-1D) sign mounted back to back with the reduced size 36" x 18" "END ROAD WORK"(G20-2) sign on low volume crossroads (see Note 4 under "Typical Construction Warning Sign Size and Spacing"). See the "Standard Highway Sign Designs for Texas" manual for sign details. The Engineer may omit the advance warning signs on low volume crossroads. The Engineer will determine whether a road is low volume. This information shall be shown in the plans.
3. Based on existing field conditions, the Engineer/Inspector may require additional signs such as FLAGGER AHEAD, LOOSE GRAVEL, or other appropriate signs. When additional signs are required, these signs will be considered part of the minimum requirements. The Engineer/Inspector will determine the proper location and spacing of any sign not shown on the BC sheets, Traffic Control Plan sheets or the Work Zone Standard Sheets.
4. The "ROAD WORK NEXT X MILES"(G20-1aT)sign shall be required at high volume crossroads to advise motorists of the length of construction in either direction from the intersection. The Engineer will determine whether a roadway is considered high volume.
5. Additional traffic control devices may be shown elsewhere in the plans for higher volume crossroads.
6. When work occurs in the intersection area, appropriate traffic control devices, as shown elsewhere in the plans or as determined by the Engineer/Inspector, shall be in place.

## T-INTERSECTION

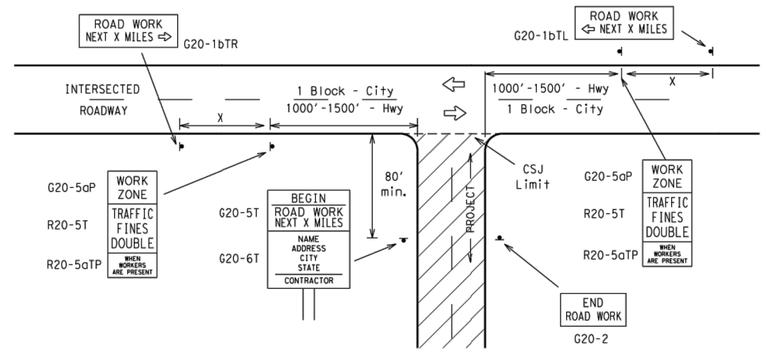


### CSJ LIMITS AT T-INTERSECTION

1. The Engineer will determine the types and location of any additional traffic control devices, such as a flagger and accompanying signs, or other signs, that should be used when work is being performed at or near an intersection.
2. If construction closes the road at a T-intersection the Contractor shall place the "CONTRACTOR NAME"(G20-6T) sign behind the Type 3 Barricades for the road closure (see BC(10) also). The "ROAD WORK NEXT X MILES" left arrow(G20-1bTL) and "ROAD WORK NEXT X MILES" right arrow (G20-1bTR)" signs shall be replaced by the detour signing called for in the plans.

## TYPICAL CONSTRUCTION WARNING SIGN SIZE AND SPACING[1,5,6]

### SIZE

| Sign Number or Series | Conventional Road | Expressway/ Freeway |
|---|---|---|
| CW20[4] CW21 CW22 CW23 CW25 | 48" x 48" | 48" x 48" |
| CW1, CW2, CW7, CW8, CW9, CW11, CW14 | 36" x 36" | 48" x 48" |
| CW3, CW4, CW5, CW6, CW8-3, CW10, CW12 | 48" x 48" | 48" x 48" |

### SPACING

| Posted Speed | Sign △ Spacing "X" |
|---|---|
| MPH | Feet (Apprx.) |
| 30 | 120 |
| 35 | 160 |
| 40 | 240 |
| 45 | 320 |
| 50 | 400 |
| 55 | 500[2] |
| 60 | 600[2] |
| 65 | 700[2] |
| 70 | 800[2] |
| 75 | 900[2] |
| 80 | 1000[2] |
| * | *[3] |

* For typical sign spacings on divided highways, expressways and freeways, see Part 6 of the "Texas Manual on Uniform Traffic Control Devices" (TMUTCD) typical application diagrams or TCP Standard Sheets.

△ Minimum distance from work area to first Advance Warning sign nearest the work area and/or distance between each additional sign.

### GENERAL NOTES

1. Special or larger size signs may be used as necessary.
2. Distance between signs should be increased as required to have 1500 feet advance warning.
3. Distance between signs should be increased as required to have 1/2 mile or more advance warning.
4. 36" x 36" "ROAD WORK AHEAD" (CW20-1D)signs may be used on low volume crossroads at the discretion of the Engineer. See Note 2 under "Typical Location of Crossroad Signs".
5. Only diamond shaped warning sign sizes are indicated.
6. See sign size listing in "TMUTCD", Sign Appendix or the "Standard Highway Sign Designs for Texas" manual for complete list of available sign design sizes.

## WORK AREAS IN MULTIPLE LOCATIONS WITHIN CSJ LIMITS

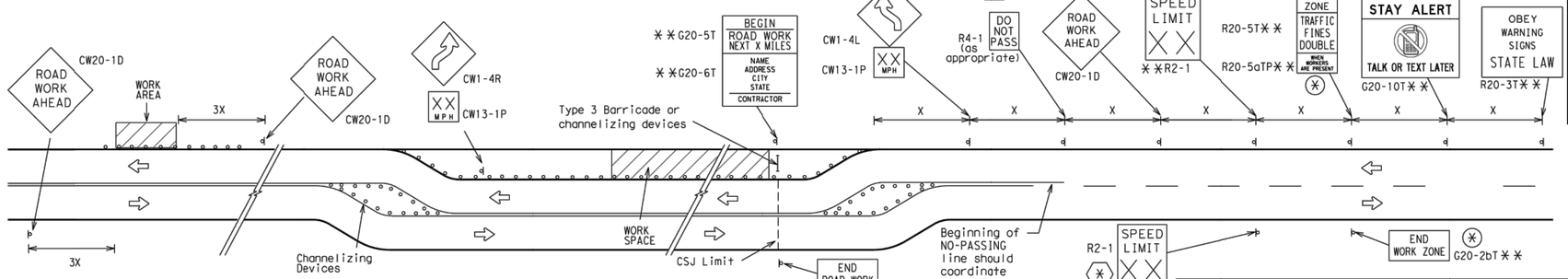


When extended distances occur between minimal work spaces, the Engineer/Inspector should ensure additional "ROAD WORK AHEAD"(CW20-1D)signs are placed in advance of these work areas to remind drivers they are still within the project limits. See the applicable TCP sheets for exact location and spacing of signs and channelizing devices.

## SAMPLE LAYOUT OF SIGNING FOR WORK BEGINNING DOWNSTREAM OF THE CSJ LIMITS

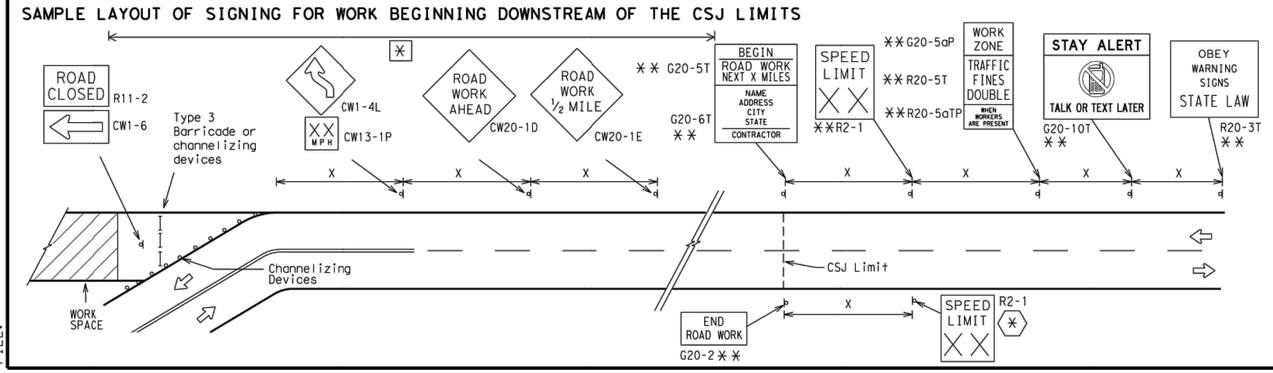


### NOTES

The Contractor shall determine the appropriate distance to be placed on the G20-1 series signs and "BEGIN ROAD WORK NEXT X MILES"(G20-5T)sign for each specific project. This distance shall replace the "X" and shall be rounded to the nearest whole mile with the approval of the Engineer. No decimals shall be used.

(*) The "BEGIN WORK ZONE"(G20-9TP) and "END WORK ZONE" (G20-2bT) shall be used as shown on the sample layout when advance signs are required outside the CSJ Limits. They inform the motorist of entering or leaving a part of the work zone lying outside the CSJ Limits where traffic fines may double if workers are present.

** Required CSJ Limit signing. See Note 10 on BC(1). TRAFFIC FINES DOUBLE signs will not be required on projects consisting solely of mobile operations work.

[*] Area for placement of "ROAD WORK AHEAD" (CW20-1D)sign and other signs or devices as called for on the Traffic Control Plan.

(*) Contractor will install a regulatory speed limit sign at the end of the work zone.

### LEGEND

| | |
|---|---|
| ⊢⊣ | Type 3 Barricade |
| ○ ○ ○ | Channelizing Devices |
| ▬ | Sign |
| X | See Typical Construction Warning Sign Size and Spacing chart or the TMUTCD for sign spacing requirements. |

SHEET 2 OF 12

Texas Department of Transportation — Traffic Operations Division Standard

# BARRICADE AND CONSTRUCTION PROJECT LIMIT

# BC(2)-14

| FILE: bc-14.dgn | DN: TxDOT | CK: TxDOT | DW: TxDOT | CK: TxDOT |
|---|---|---|---|---|
| © TxDOT November 2002 | CONT | SECT | JOB | HIGHWAY |
| REVISIONS 9-07 8-14 7-13 | DIST | COUNTY | | SHEET NO. 32 |

DATE:
FILE:

# TYPICAL APPLICATION OF WORK ZONE SPEED LIMIT SIGNS

**Work zone speed limits shall be regulatory, established in accordance with the "Procedures for Establishing Speed Zones," and approved by the Texas Transportation Commission, or by City Ordinance when within Incorporated City Limits.**

Reduced speeds should only be posted in the vicinity of work activity and not throughout the entire project.

Regulatory work zone speed signs (R2-1) shall be removed or covered during periods when they are not needed.

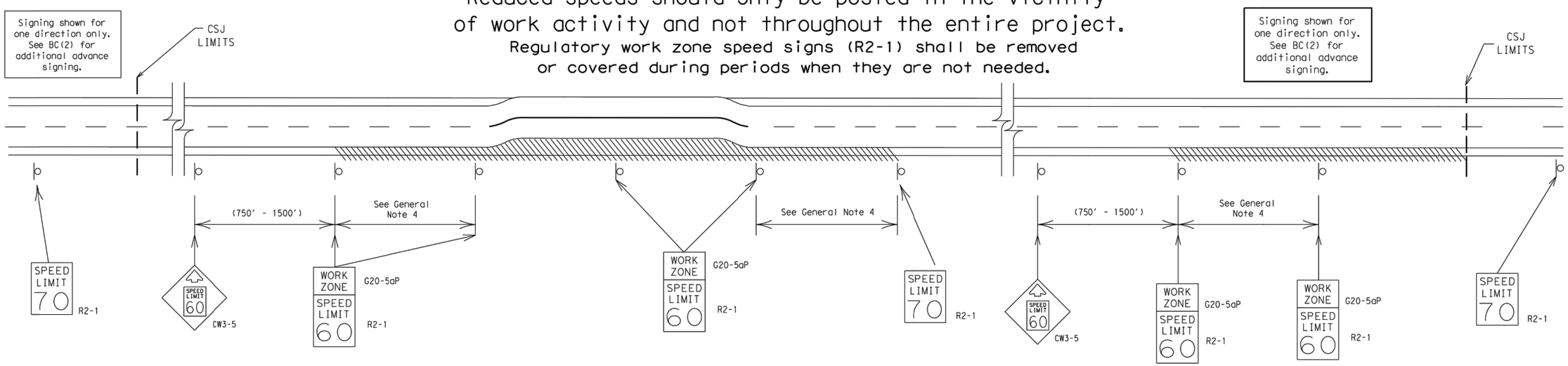


## GUIDANCE FOR USE:

### LONG/INTERMEDIATE TERM WORK ZONE SPEED LIMITS

This type of work zone speed limit should be included on the design of the traffic control plans when restricted geometrics with a lower design speed are present in the work zone and modification of the geometrics to a higher design speed is not feasible.

Long/Intermediate Term Work Zone Speed Limit signs, when approved as described above, should be posted and visible to the motorist when work activity is present. Work activity may also be defined as a change in the roadway that requires a reduced speed for motorists to safely negotiate the work area, including:

a) rough road or damaged pavement surface
b) substantial alteration of roadway geometrics (diversions)
c) construction detours
d) grade
e) width
f) other conditions readily apparent to the driver

As long as any of these conditions exist, the work zone speed limit signs should remain in place.

### SHORT TERM WORK ZONE SPEED LIMITS

This type of work zone speed limit may be included on the design of the traffic control plans when workers or equipment are not behind concrete barrier, when work activity is within 10 feet of the traveled way or actually in the travelled way.

Short Term Work Zone Speed Limit signs should be posted and visible to the motorists only when work activity is present. When work activity is not present, signs shall be removed or covered.
(See Removing or Covering on BC(4)).

### GENERAL NOTES

1. Regulatory work zone speed limits should be used only for sections of construction projects where speed control is of major importance.
2. Regulatory work zone speed limit signs shall be placed on supports at a 7 foot minimum mounting height.
3. Speed zone signs are illustrated for one direction of travel and are normally posted for each direction of travel.
4. Frequency of work zone speed limit signs should be:
   40 mph and greater 0.2 to 2 miles
   35 mph and less 0.2 to 1 mile
5. Regulatory speed limit signs shall have black legend and border on a white reflective background (See "Reflective Sheeting" on BC(4)).
6. Fabrication, erection and maintenance of the"ADVANCE SPEED LIMIT"(CW3-5)sign, "WORK ZONE"(G20-5aP) plaque and the "SPEED LIMIT"(R2-1)signs shall not be paid for directly, but shall be considered subsidiary to Item 502.
7. Turning signs from view, laying signs over or down will not be allowed, unless as otherwise noted under "REMOVING OR COVERING" on BC(4).
8. Techniques that may help reduce traffic speeds include but are not limited to:
   A. Law enforcement.
   B. Flagger stationed next to sign.
   C. Portable changeable message sign (PCMS).
   D. Low-power (drone) radar transmitter.
   E. Speed monitor trailers or signs.
9. Speeds shown on details above are for illustration only. Work Zone Speed Limits should only be posted as approved for each project.
10. For more specific guidance concerning the type of work, work zone conditions and factors impacting allowable regulatory construction speed zone reduction see TxDOT form #1204 in the TxDOT e-form system.

DISCLAIMER:
The use of this standard is governed by the "Texas Engineering Practice Act". No warranty of any kind is made by TxDOT for any purpose whatsoever. TxDOT assumes no responsibility for the conversion of this standard to other formats or for incorrect results or damages resulting from its use.

DATE:
FILE:

SHEET 3 OF 12

Texas Department of Transportation — Traffic Operations Division Standard

**BARRICADE AND CONSTRUCTION WORK ZONE SPEED LIMIT**

**BC(3)-14**

| FILE: bc-14.dgn | DN: TxDOT | CK: TxDOT | DW: TxDOT | CK: TxDOT |
|---|---|---|---|---|
| © TxDOT November 2002 | CONT | SECT | JOB | HIGHWAY |
| REVISIONS 9-07 8-14 7-13 | DIST | COUNTY | | SHEET NO. 33 |

97

DISCLAIMER:
The use of this standard is governed by the "Texas Engineering Practice Act". No warranty of any kind is made by TxDOT for any purpose whatsoever. TxDOT assumes no responsibility for the conversion of this standard to other formats or for incorrect results or damages resulting from its use.

## TYPICAL MINIMUM CLEARANCES FOR LONG TERM AND INTERMEDIATE TERM SIGNS

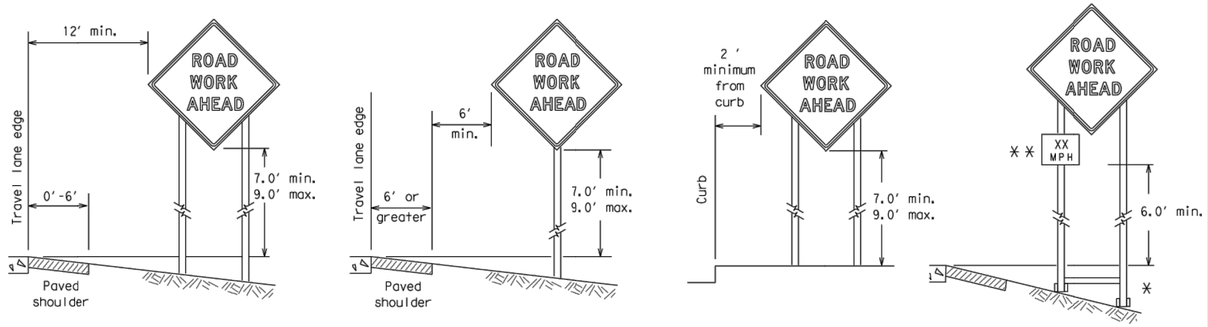


✱ When placing skid supports on unlevel ground, the leg post lengths must be adjusted so the sign appears straight and plumb. Objects shall NOT be placed under skids as a means of leveling.

✱✱ When plaques are placed on dual-leg supports, they should be attached to the upright nearest the travel lane. Supplemental plaques (advisory or distance) should not cover the surface of the parent sign.

## ATTACHMENT FOR SIGN SUPPORTS

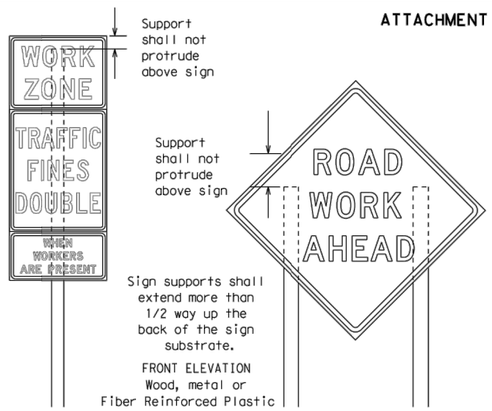


Splicing embedded perforated square metal tubing in order to extend post height will only be allowed when the splice is made using four bolts, two above and two below the spice point. Splice must be located entirely behind the sign substrate, not near the base of the support. Splice insert lengths should be at least 5 times nominal post size, centered on the splice and of at least the same gauge material.

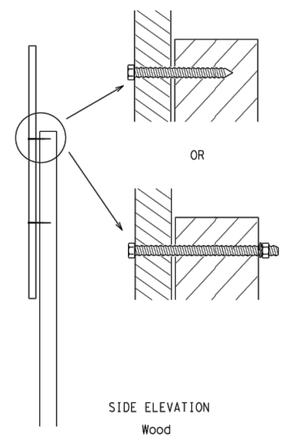


Attachment to wooden supports will be by bolts and nuts or screws. Use TxDOT's or manufacturer's recommended procedures for attaching sign substrates to other types of sign supports

**Nails shall NOT be allowed. Each sign shall be attached directly to the sign support. Multiple signs shall not be joined or spliced by any means. Wood supports shall not be extended or repaired by splicing or other means.**

## STOP/SLOW PADDLES

1. STOP/SLOW paddles are the primary method to control traffic by flaggers. The STOP/SLOW paddle size should be 24" x 24" as detailed below.
2. When used at night, the STOP/SLOW paddle shall be retroreflectorized.
3. STOP/SLOW paddles may be attached to a staff with a minimum length of 6' to the bottom of the sign.
4. Any lights incorporated into the STOP or SLOW paddle faces shall only be as specifically described in Section 6E.03 Hand Signaling Devices in the TMUTCD.

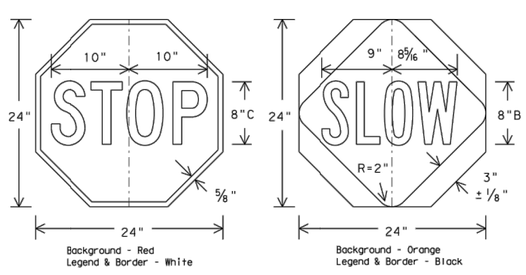


## CONTRACTOR REQUIREMENTS FOR MAINTAINING PERMANENT SIGNS WITHIN THE PROJECT LIMITS

1. Permanent signs are used to give notice of traffic laws or regulations, call attention to conditions that are potentially hazardous to traffic operations, show route designations, destinations, directions, distances, services, points of interest, and other geographical, recreational, or cultural information. Drivers proceeding through a work zone need the same, if not better route guidance as normally installed on a roadway without construction.
2. When permanent regulatory or warning signs conflict with work zone conditions, remove or cover the permanent signs until the permanent sign message matches the roadway condition.
3. When existing permanent signs are moved and relocated due to construction purposes, they shall be visible to motorists at all times.
4. If existing signs are to be relocated on their original supports, they shall be installed on crashworthy bases as shown on the SMD Standard sheets. The signs shall meet the required mounting heights shown on the BC Sheets or the SMD Standards. This work should be paid for under the appropriate pay item for relocating existing signs.
5. If permanent signs are to be removed and relocated using temporary supports, the Contractor shall use crashworthy supports as shown on the BC sheets or the CWZTCD. The signs shall meet the required mounting heights shown on the BC Sheets or the SMD Standards during construction. This work should be paid for under the appropriate pay item for relocating existing signs.
6. Any sign or traffic control device that is struck or damaged by the Contractor or his/her construction equipment shall be replaced as soon as possible by the Contractor to ensure proper guidance for the motorists. This will be subsidiary to Item 502.

## GENERAL NOTES FOR WORK ZONE SIGNS

1. Contractor shall install and maintain signs in a straight and plumb condition and/or as directed by the Engineer.
2. Wooden sign posts shall be painted white.
3. Barricades shall NOT be used as sign supports.
4. All signs shall be installed in accordance with the plans or as directed by the Engineer. Signs shall be used to regulate, warn, and guide the traveling public safely through the work zone.
5. The Contractor may furnish either the sign design shown in the plans or in the "Standard Highway Sign Designs for Texas" (SHSD). The Engineer/Inspector may require the Contractor to furnish other work zone signs that are shown in the TMUTCD but may have been omitted from the plans. Any variation in the plans shall be documented by written agreement between the Engineer and the Contractor's Responsible Person. All changes must be documented in writing before being implemented. This can include documenting the changes in the Inspector's TxDOT diary and having both the Inspector and Contractor initial and date the agreed upon changes.
6. The Contractor shall furnish sign supports listed in the "Compliant Work Zone Traffic Control Device List" (CWZTCD). The Contractor shall install the sign support in accordance with the manufacturer's recommendations. If there is a question regarding installation procedures, the Contractor shall furnish the Engineer a copy of the manufacturer's installation recommendations so the Engineer can verify the correct procedures are being followed.
7. The Contractor is responsible for installing signs on approved supports and replacing signs with damaged or cracked substrates and/or damaged or marred reflective sheeting as directed by the Engineer/Inspector.
8. Identification markings may be shown only on the back of the sign substrate. The maximum height of letters and/or company logos used for identification shall be 1 inch.
9. The Contractor shall replace damaged wood posts. New or damaged wood sign posts shall not be spliced.

## DURATION OF WORK (as defined by the "Texas Manual on Uniform Traffic Control Devices" Part 6)

1. The types of sign supports, sign mounting height, the size of signs, and the type of sign substrates can vary based on the type of work being performed. The Engineer is responsible for selecting the appropriate size sign for the type of work being performed. The Contractor is responsible for ensuring the sign support, sign mounting height and substrate meets manufacturer's recommendations in regard to crashworthiness and duration of work requirements.
   a. Long-term stationary - work that occupies a location more than 3 days.
   b. Intermediate-term stationary - work that occupies a location more than one daylight period up to 3 days, or nighttime work lasting more than one hour.
   c. Short-term stationary - daytime work that occupies a location for more than 1 hour in a single daylight period.
   d. Short, duration - work that occupies a location up to 1 hour.
   e. Mobile - work that moves continuously or intermittently (stopping for up to approximately 15 minutes.)

## SIGN MOUNTING HEIGHT

1. The bottom of Long-term/Intermediate-term signs shall be at least 7 feet, but not more than 9 feet, above the paved surface, except as shown for supplemental plaques mounted below other signs.
2. The bottom of Short-term/Short Duration signs shall be a minimum of 1 foot above the pavement surface but no more than 2 feet above the ground.
3. Long-term/Intermediate-term Signs may be used in lieu of Short-term/Short Duration signing.
4. Short-term/Short Duration signs shall be used only during daylight and shall be removed at the end of the workday or raised to appropriate Long-term/Intermediate sign height.
5. Regulatory signs shall be mounted at least 7 feet, but not more than 9 feet, above the paved surface regardless of work duration.

## SIZE OF SIGNS

1. The Contractor shall furnish the sign sizes shown on BC (2) unless otherwise shown in the plans or as directed by the Engineer.

## SIGN SUBSTRATES

1. The Contractor shall ensure the sign substrate is installed in accordance with the manufacturer's recommendations for the type of sign support that is being used. The CWZTCD lists each substrate that can be used on the different types and models of sign supports.
2. "Mesh" type materials are NOT an approved sign substrate, regardless of the tightness of the weave.
3. All wooden individual sign panels fabricated from 2 or more pieces shall have one or more plywood cleat, 1/2" thick by 6" wide, fastened to the back of the sign and extending fully across the sign. The cleat shall be attached to the back of the sign using wood screws that do not penetrate the face of the sign panel. The screws shall be placed on both sides of the splice and spaced at 6" centers. The Engineer may approve other methods of splicing the sign face.

## REFLECTIVE SHEETING

1. All signs shall be retroreflective and constructed of sheeting meeting the color and retro-reflectivity requirements of DMS-8300 for rigid signs or DMS-8310 for roll-up signs. The web address for DMS specifications is shown on BC(1).
2. White sheeting, meeting the requirements of DMS-8300 Type A, shall be used for signs with a white background.
3. Orange sheeting, meeting the requirements of DMS-8300 Type $B_{FL}$ or Type $C_{FL}$, shall be used for rigid signs with orange backgrounds.

## SIGN LETTERS

1. All sign letters and numbers shall be clear, and open rounded type uppercase alphabet letters as approved by the Federal Highway Administration (FHWA) and as published in the "Standard Highway Sign Design for Texas" manual. Signs, letters and numbers shall be of first class workmanship in accordance with Department Standards and Specifications.

## REMOVING OR COVERING

1. When sign messages may be confusing or do not apply, the signs shall be removed or completely covered.
2. Long-term stationary or intermediate stationary signs installed on square metal tubing may be turned away from traffic 90 degrees when the sign message is not applicable. This technique may not be used for signs installed in the median of divided highways or near any intersections where the sign may be seen from approaching traffic.
3. Signs installed on wooden skids shall not be turned at 90 degree angles to the roadway. These signs should be removed or completely covered when not required.
4. When signs are covered, the material used shall be opaque, such as heavy mil black plastic, or other materials which will cover the entire sign face and maintain their opaque properties under automobile headlights at night, without damaging the sign sheeting.
5. Burlap shall NOT be used to cover signs.
6. Duct tape or other adhesive material shall NOT be affixed to a sign face.
7. Signs and anchor stubs shall be removed and holes backfilled upon completion of work.

## SIGN SUPPORT WEIGHTS

1. Where sign supports require the use of weights to keep from turning over, the use of sandbags with dry, cohesionless sand should be used.
2. The sandbags will be tied shut to keep the sand from spilling and to maintain a constant weight.
3. Rock, concrete, iron, steel or other solid objects shall not be permitted for use as sign support weights.
4. Sandbags should weigh a minimum of 35 lbs and a maximum of 50 lbs.
5. Sandbags shall be made of a durable material that tears upon vehicular impact. Rubber (such as tire inner tubes) shall NOT be used.
6. Rubber ballasts designed for channelizing devices should not be used for ballast on portable sign supports. Sign supports designed and manufactured with rubber bases may be used when shown on the CWZTCD list.
7. Sandbags shall only be placed along or laid over the base supports of the traffic control device and shall not be suspended above ground level or hung with rope, wire, chains or other fasteners. Sandbags shall be placed along the length of the skids to weigh down the sign support.
8. Sandbags shall NOT be placed under the skid and shall not be used to level sign supports placed on slopes.

## FLAGS ON SIGNS

1. Flags may be used to draw attention to warning signs. When used the flag shall be 16 inches square or larger and shall be orange or fluorescent red-orange in color. Flags shall not be allowed to cover any portion of the sign face.



Texas Department of Transportation — Traffic Operations Division Standard

# BARRICADE AND CONSTRUCTION TEMPORARY SIGN NOTES

# BC(4)-14

| FILE: bc-14.dgn | DN: TxDOT | CK: TxDOT | DW: TxDOT | CK: TxDOT |
|---|---|---|---|---|
| © TxDOT November 2002 | CONT | SECT | JOB | HIGHWAY |
| REVISIONS 9-07 8-14 7-13 | DIST | | COUNTY | SHEET NO. 34 |

DATE:
FILE:

DISCLAIMER:
The use of this standard is governed by the "Texas Engineering Practice Act". No warranty of any kind is made by TxDOT for any purpose whatsoever. TxDOT assumes no responsibility for the conversion of this standard to other formats or for incorrect results or damages resulting from its use.

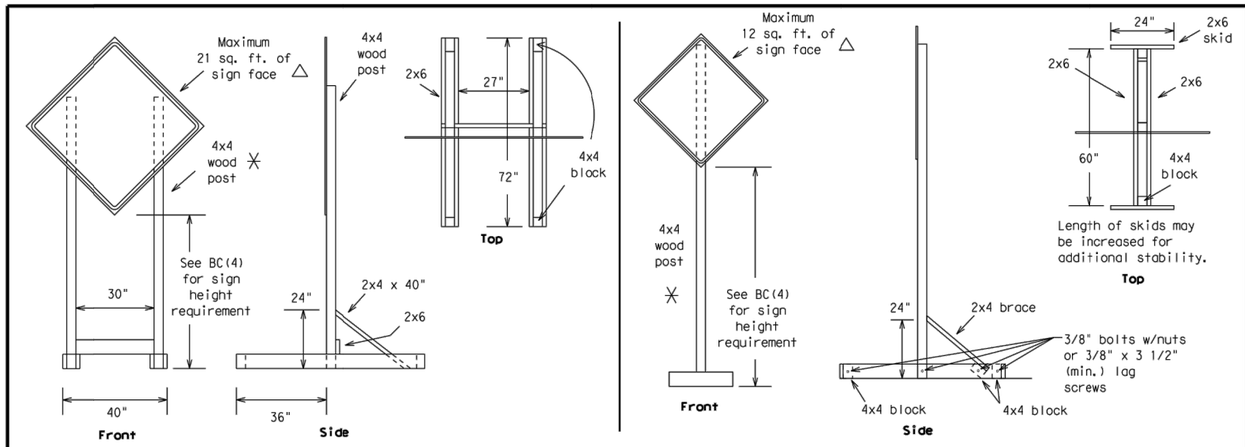


## SKID MOUNTED WOOD SIGN SUPPORTS

LONG/INTERMEDIATE TERM STATIONARY - PORTABLE SKID MOUNTED SIGN SUPPORTS □

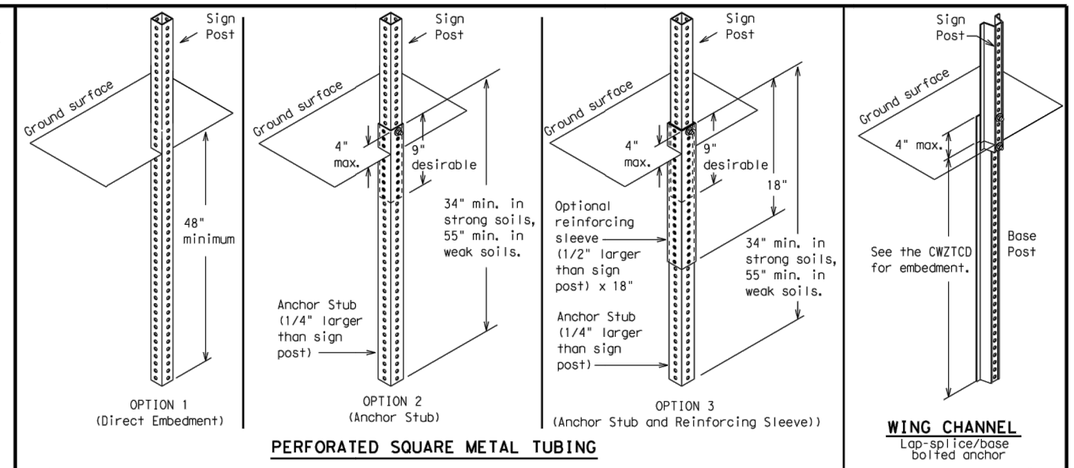


PERFORATED SQUARE METAL TUBING

WING CHANNEL
Lap-splice/base bolted anchor

## GROUND MOUNTED SIGN SUPPORTS

Refer to the CWZTCD and the manufacturer's installation procedure for each type sign support.
The maximum sign square footage shall adhere to the manufacturer's recommendation.
Two post installations can be used for larger signs.

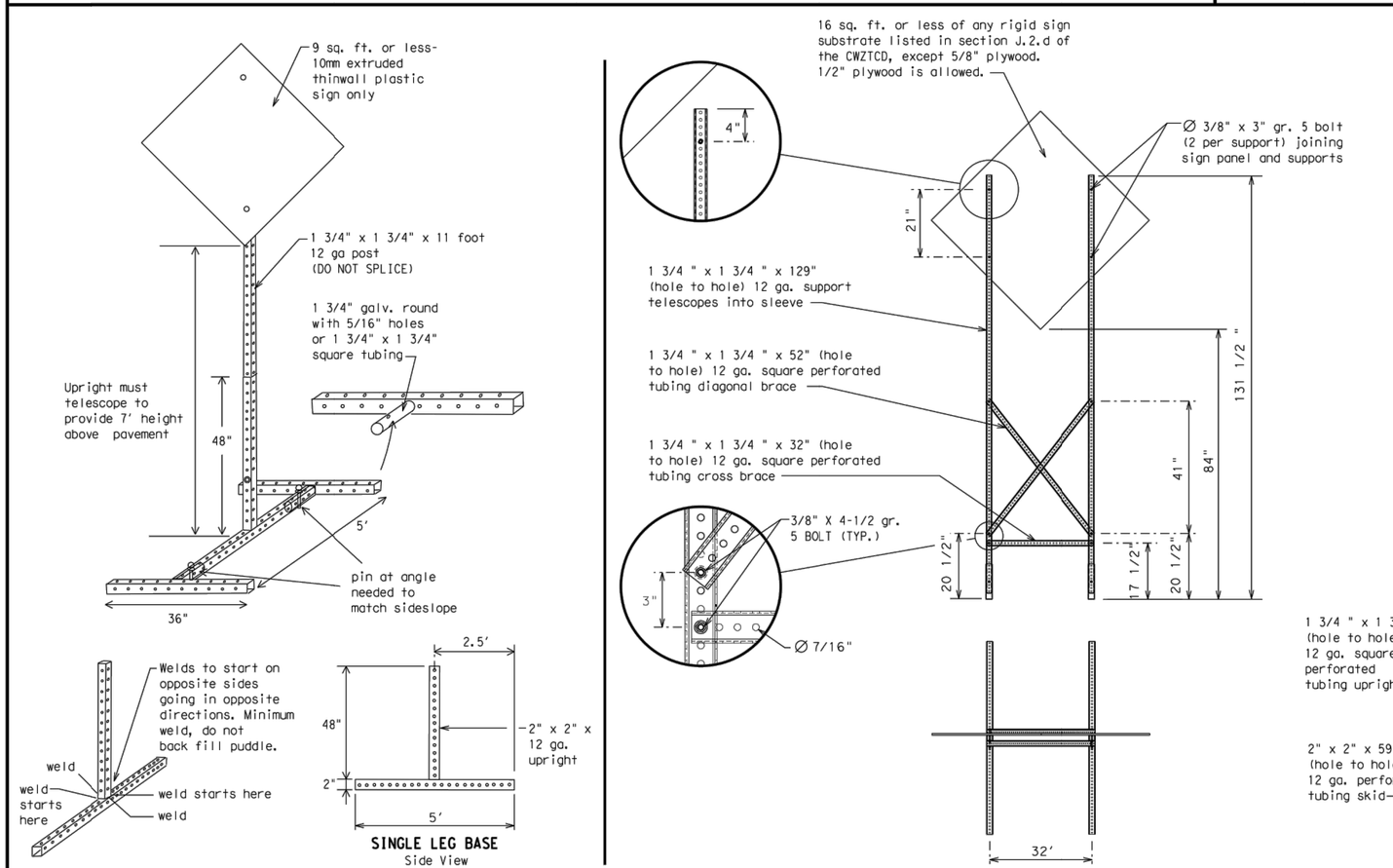


| Nominal Post Size | Number of Posts | Maximum Sq. feet of Sign Face | Minimum Soil Embedment | Drilled Hole(s) Required |
|---|---|---|---|---|
| 4 x 4 | 1 | 12 | 36" | NO |
| 4 x 4 | 2 | 21 | 36" | NO |
| 4 x 6 | 1 | 21 | 36" | YES |
| 4 x 6 | 2 | 36 | 36" | YES |

WOOD POST SYSTEM FOR GROUND MOUNTED SIGN SUPPORTS

## SKID MOUNTED PERFORATED SQUARE STEEL TUBING SIGN SUPPORTS

## WEDGE ANCHORS

Both steel and plastic Wedge Anchor Systems as shown on the SMD Standard Sheets may be used as temporary sign supports for signs up to 10 square feet of sign face. They may be set in concrete or in sturdy soils if approved by the Engineer. (See web address for "Traffic Engineering Standard Sheets" on BC(1)).

## OTHER DESIGNS

MORE DETAILS OF APPROVED LONG/INTERMEDIATE AND SHORT TERM SUPPORTS CAN BE FOUND ON THE CWZTCD LIST. SEE BC(1) FOR WEBSITE LOCATION.

## GENERAL NOTES

1. Nails may be used in the assembly of wooden sign supports, but 3/8" bolts with nuts or 3/8" x 3 1/2" lag screws must be used on every joint for final connection.
2. No more than 2 sign posts shall be placed within a 7 ft. circle, except for specific materials noted on the CWZTCD List.
3. When project is completed, all sign supports and foundations shall be removed from the project site. This will be considered subsidiary to Item 502.

□ See BC(4) for definition of "Work Duration."

✳ Wood sign posts MUST be one piece. Splicing will NOT be allowed. Posts shall be painted white.

△ See the CWZTCD for the type of sign substrate that can be used for each approved sign support.

SHEET 5 OF 12

Texas Department of Transportation — Traffic Operations Division Standard

# BARRICADE AND CONSTRUCTION TYPICAL SIGN SUPPORT

# BC(5)-14

| FILE: bc-14.dgn | DN: TxDOT | CK: TxDOT | DW: TxDOT | CK: TxDOT |
|---|---|---|---|---|
| © TxDOT November 2002 | CONT | SECT | JOB | HIGHWAY |
| REVISIONS 9-07 8-14 7-13 | DIST | | COUNTY | SHEET NO. 35 |

DATE:
FILE:

99

WHEN NOT IN USE, REMOVE THE PCMS FROM THE RIGHT-OF-WAY OR PLACE THE PCMS BEHIND BARRIER OR GUARDRAIL WITH SIGN PANEL TURNED PARALLEL TO TRAFFIC

## PORTABLE CHANGEABLE MESSAGE SIGNS

1. The Engineer/Inspector shall approve all messages used on portable changeable message signs (PCMS).
2. Messages on PCMS should contain no more than 8 words (about four to eight characters per word), not including simple words such as "TO," "FOR," "AT," etc.
3. Messages should consist of a single phase, or two phases that alternate. Three-phase messages are not allowed. Each phase of the message should convey a single thought, and must be understood by itself.
4. Use the word "EXIT" to refer to an exit ramp on a freeway; i.e., "EXIT CLOSED." Do not use the term "RAMP."
5. Always use the route or interstate designation (IH, US, SH, FM) along with the number when referring to a roadway.
6. When in use the bottom of a stationary PCMS message panel should be a minimum 7 feet above the roadway, where possible.
7. The message term "WEEKEND" should be used only if the work is to start on Saturday morning and end by Sunday evening at midnight. Actual days and hours of work should be displayed on the PCMS if work is to begin on Friday evening and/or continue into Monday morning.
8. The Engineer/Inspector may select one of two options which are available for displaying a two-phase message on a PCMS. Each phase may be displayed for either four seconds each or for three seconds each.
9. Do not "flash" messages or words included in a message. The message should be steady burn or continuous while displayed.
10. Do not present redundant information on a two-phase message; i.e., keeping two lines of the message the same and changing the third line.
11. Do not use the word "Danger" in message.
12. Do not display the message "LANES SHIFT LEFT" or "LANES SHIFT RIGHT" on a PCMS. Drivers do not understand the message.
13. Do not display messages that scroll horizontally or vertically across the face of the sign.
14. The following table lists abbreviated words and two-word phrases that are acceptable for use on a PCMS. Both words in a phrase must be displayed together. Words or phrases not on this list should not be abbreviated, unless shown in the TMUTCD.
15. PCMS character height should be at least 18 inches for trailer mounted units. They should be visible from at least 1/2 (.5) mile and the text should be legible from at least 600 feet at night and 800 feet in daylight. Truck mounted units must have a character height of 10 inches and must be legible from at least 400 feet.
16. Each line of text should be centered on the message board rather than left or right justified.
17. If disabled, the PCMS should default to an illegible display that will not alarm motorists and will only be used to alert workers that the PCMS has malfunctioned. A pattern such as a series of horizontal solid bars is appropriate.

| WORD OR PHRASE | ABBREVIATION |
|---|---|
| Access Road | ACCS RD |
| Alternate | ALT |
| Avenue | AVE |
| Best Route | BEST RTE |
| Boulevard | BLVD |
| Bridge | BRDG |
| Cannot | CANT |
| Center | CTR |
| Construction Ahead | CONST AHD |
| CROSSING | XING |
| Detour Route | DETOUR RTE |
| Do Not | DONT |
| East | E |
| Eastbound | (route) E |
| Emergency | EMER |
| Emergency Vehicle | EMER VEH |
| Entrance, Enter | ENT |
| Express Lane | EXP LN |
| Expressway | EXPWY |
| XXXX Feet | XXXX FT |
| Fog Ahead | FOG AHD |
| Freeway | FRWY, FWY |
| Freeway Blocked | FWY BLKD |
| Friday | FRI |
| Hazardous Driving | HAZ DRIVING |
| Hazardous Material | HAZMAT |
| High-Occupancy | HOV |
| Vehicle Highway | HWY |
| Hour(s) | HR, HRS |
| Information | INFO |
| It Is | ITS |
| Junction | JCT |
| Left | LFT |
| Left Lane | LFT LN |
| Lane Closed | LN CLOSED |
| Lower Level | LWR LEVEL |
| Maintenance | MAINT |

| WORD OR PHRASE | ABBREVIATION |
|---|---|
| Major | MAJ |
| Miles | MI |
| Miles Per Hour | MPH |
| Minor | MNR |
| Monday | MON |
| Normal | NORM |
| North | N |
| Northbound | (route) N |
| Parking | PKING |
| Road | RD |
| Right Lane | RT LN |
| Saturday | SAT |
| Service Road | SERV RD |
| Shoulder | SHLDR |
| Slippery | SLIP |
| South | S |
| Southbound | (route) S |
| Speed | SPD |
| Street | ST |
| Sunday | SUN |
| Telephone | PHONE |
| Temporary | TEMP |
| Thursday | THURS |
| To Downtown | TO DWNTN |
| Traffic | TRAF |
| Travelers | TRVLRS |
| Tuesday | TUES |
| Time Minutes | TIME MIN |
| Upper Level | UPR LEVEL |
| Vehicles (s) | VEH, VEHS |
| Warning | WARN |
| Wednesday | WED |
| Weight Limit | WT LIMIT |
| West | W |
| Westbound | (route) W |
| Wet Pavement | WET PVMT |
| Will Not | WONT |

Roadway designation # IH-number, US-number, SH-number, FM-number

DISCLAIMER:
The use of this standard is governed by the "Texas Engineering Practice Act". No warranty of any kind is made by TxDOT for any purpose whatsoever. TxDOT assumes no responsibility for the conversion of this standard to other formats or for incorrect results or damages resulting from its use.

DATE:
FILE:

# RECOMMENDED PHASES AND FORMATS FOR PCMS MESSAGES DURING ROADWORK ACTIVITIES

(The Engineer may approve other messages not specifically covered here.)

## Phase 1: Condition Lists

### Road/Lane/Ramp Closure List

| | |
|---|---|
| FREEWAY CLOSED X MILE | FRONTAGE ROAD CLOSED |
| ROAD CLOSED AT SH XXX | SHOULDER CLOSED XXX FT |
| ROAD CLSD AT FM XXXX | RIGHT LN CLOSED XXX FT |
| RIGHT X LANES CLOSED | RIGHT X LANES OPEN |
| CENTER LANE CLOSED | DAYTIME LANE CLOSURES |
| NIGHT LANE CLOSURES | I-XX SOUTH EXIT CLOSED |
| VARIOUS LANES CLOSED | EXIT XXX CLOSED X MILE |
| EXIT CLOSED | RIGHT LN TO BE CLOSED |
| MALL DRIVEWAY CLOSED | X LANES CLOSED TUE - FRI |
| XXXXXXXX BLVD CLOSED | |

### Other Condition List

| | |
|---|---|
| ROADWORK XXX FT | ROAD REPAIRS XXXX FT |
| FLAGGER XXXX FT | LANE NARROWS XXXX FT |
| RIGHT LN NARROWS XXXX FT | TWO-WAY TRAFFIC XX MILE |
| MERGING TRAFFIC XXXX FT | CONST TRAFFIC XXX FT |
| LOOSE GRAVEL XXXX FT | UNEVEN LANES XXXX FT |
| DETOUR X MILE | ROUGH ROAD XXXX FT |
| ROADWORK PAST SH XXXX | ROADWORK NEXT FRI-SUN |
| BUMP XXXX FT | US XXX EXIT X MILES |
| TRAFFIC SIGNAL XXXX FT | LANES SHIFT * |

* LANES SHIFT in Phase 1 must be used with STAY IN LANE in Phase 2.

## Phase 2: Possible Component Lists

### Action to Take/Effect on Travel List

| | |
|---|---|
| MERGE RIGHT | FORM X LINES RIGHT |
| DETOUR NEXT X EXITS | USE XXXXX RD EXIT |
| USE EXIT XXX | USE EXIT I-XX NORTH |
| STAY ON US XXX SOUTH | USE I-XX E TO I-XX N |
| TRUCKS USE US XXX N | WATCH FOR TRUCKS |
| WATCH FOR TRUCKS | EXPECT DELAYS |
| EXPECT DELAYS | PREPARE TO STOP |
| REDUCE SPEED XXX FT | END SHOULDER USE |
| USE OTHER ROUTES | WATCH FOR WORKERS |
| STAY IN LANE * | |

### Location List

AT FM XXXX
BEFORE RAILROAD CROSSING
NEXT X MILES
PAST US XXX EXIT
XXXXXXX TO XXXXXXX
US XXX TO FM XXXX

### Warning List

SPEED LIMIT XX MPH
MAXIMUM SPEED XX MPH
MINIMUM SPEED XX MPH
ADVISORY SPEED XX MPH
RIGHT LANE EXIT
USE CAUTION
DRIVE SAFELY
DRIVE WITH CARE

### ** Advance Notice List

TUE-FRI XX AM- X PM
APR XX- XX X PM-X AM
BEGINS MONDAY
BEGINS MAY XX
MAY X-X XX PM - XX AM
NEXT FRI-SUN
XX AM TO XX PM
NEXT TUE AUG XX
TONIGHT XX PM- XX AM

** See Application Guidelines Note 6.

## APPLICATION GUIDELINES

1. Only 1 or 2 phases are to be used on a PCMS.
2. The 1st phase (or both) should be selected from the "Road/Lane/Ramp Closure List" and the "Other Condition List".
3. A 2nd phase can be selected from the "Action to Take/Effect on Travel, Location, General Warning, or Advance Notice Phase Lists".
4. A Location Phase is necessary only if a distance or location is not included in the first phase selected.
5. If two PCMS are used in sequence, they must be separated by a minimum of 1000 ft. Each PCMS shall be limited to two phases, and should be understandable by themselves.
6. For advance notice, when the current date is within seven days of the actual work date, calendar days should be replaced with days of the week. Advance notification should typically be for no more than one week prior to the work.

## WORDING ALTERNATIVES

1. The words RIGHT, LEFT and ALL can be interchanged as appropriate.
2. Roadway designations IH, US, SH, FM and LP can be interchanged as appropriate.
3. EAST, WEST, NORTH and SOUTH (or abbreviations E, W, N and S) can be interchanged as appropriate.
4. Highway names and numbers replaced as appropriate.
5. ROAD, HIGHWAY and FREEWAY can be interchanged as needed.
6. AHEAD may be used instead of distances if necessary.
7. FT and MI, MILE and MILES interchanged as appropriate.
8. AT, BEFORE and PAST interchanged as needed.
9. Distances or AHEAD can be eliminated from the message if a location phase is used.

PCMS SIGNS WITHIN THE R.O.W. SHALL BE BEHIND GUARDRAIL OR CONCRETE BARRIER OR SHALL HAVE A MINIMUM OF FOUR (4) PLASTIC DRUMS PLACED PERPENDICULAR TO TRAFFIC ON THE UPSTREAM SIDE OF THE PCMS, WHEN EXPOSED TO ONE DIRECTION OF TRAFFIC. WHEN EXPOSED TO TWO WAY TRAFFIC, THE FOUR DRUMS SHOULD BE PLACED WITH ONE DRUM AT EACH OF THE FOUR CORNERS OF THE UNIT.

## FULL MATRIX PCMS SIGNS

1. When Full Matrix PCMS signs are used, the character height and legibility/visibility requirements shall be maintained as listed in Note 15 under "PORTABLE CHANGEABLE MESSAGE SIGNS" above.
2. When symbol signs, such as the "Flagger Symbol"(CW20-7) are represented graphically on the Full Matrix PCMS sign and, with the approval of the Engineer, it shall maintain the legibility/visibility requirement listed above.
3. When symbol signs are represented graphically on the Full Matrix PCMS, they shall only supplement the use of the static sign represented, and shall not substitute for, or replace that sign.
4. A full matrix PCMS may be used to simulate a flashing arrow board provided it meets the visibility, flash rate and dimming requirements on BC(7), for the same size arrow.



Texas Department of Transportation — Traffic Operations Division Standard

# BARRICADE AND CONSTRUCTION PORTABLE CHANGEABLE MESSAGE SIGN (PCMS)

## BC(6)-14

| FILE: bc-14.dgn | DN: TxDOT | CK: TxDOT | DW: TxDOT | CK: TxDOT |
|---|---|---|---|---|
| ©TxDOT November 2002 | CONT | SECT | JOB | HIGHWAY |
| REVISIONS 9-07 8-14 7-13 | DIST | COUNTY | | SHEET NO. 36 |

100

DISCLAIMER:
The use of this standard is governed by the "Texas Engineering Practice Act". No warranty of any kind is made by TxDOT for any purpose whatsoever. TxDOT assumes no responsibility for the conversion of this standard to other formats or for incorrect results or damages resulting from its use.

1. Barrier Reflectors shall be pre-qualified, and conform to the color and reflectivity requirements of DMS-8600. A list of prequalified Barrier Reflectors can be found at the Material Producer List web address shown on BC(1).
2. Color of Barrier Reflectors shall be as specified in the TMUTCD. The cost of the reflectors shall be considered subsidiary to Item 512.

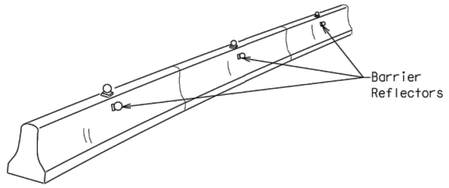


## CONCRETE TRAFFIC BARRIER (CTB)

3. Where traffic is on one side of the CTB, two (2) Barrier Reflectors shall be mounted in approximately the midsection of each section of CTB. An alternate mounting location is uniformly spaced at one end of each CTB. This will allow for attachment of a barrier grapple without damaging the reflector. The Barrier Reflector mounted on the side of the CTB shall be located directly below the reflector mounted on top of the barrier, as shown in the detail above.
4. Where CTB separates two-way traffic, three barrier reflectors shall be mounted on each section of CTB. The reflector unit on top shall have two yellow reflective faces (Bi-Directional)while the reflectors on each side of the barrier shall have one yellow reflective face, as shown in the detail above.
5. When CTB separates traffic traveling in the same direction, no barrier reflectors will be required on top of the CTB.
6. Barrier Reflector units shall be yellow or white in color to match the edgeline being supplemented.
7. Maximum spacing of Barrier Reflectors is forty (40) feet.
8. Pavement markers or temporary flexible-reflective roadway marker tabs shall NOT be used as CTB delineation.
9. Attachment of Barrier Reflectors to CTB shall be per manufacturer's recommendations.
10. Missing or damaged Barrier Reflectors shall be replaced as directed by the Engineer.
11. Single slope barriers shall be delineated as shown on the above detail.

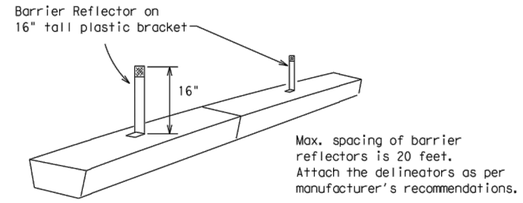


## LOW PROFILE CONCRETE BARRIER (LPCB)

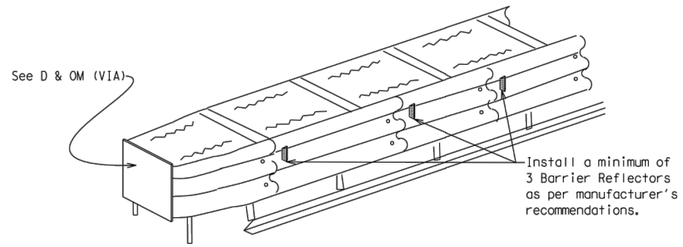


## DELINEATION OF END TREATMENTS

**END TREATMENTS FOR CTB'S USED IN WORK ZONES**

End treatments used on CTB's in work zones shall meet crashworthy standards as defined in the National Cooperative Highway Research Report 350. Refer to the CWZTCD List for approved end treatments and manufacturers.

# BARRIER REFLECTORS FOR CONCRETE TRAFFIC BARRIER AND ATTENUATORS

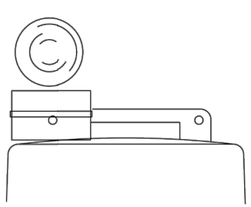

Type C Warning Light or approved substitute mounted on a drum adjacent to the travel way.

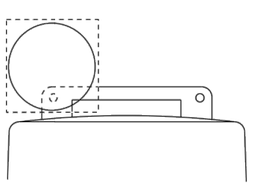

Warning reflector may be round or square.Must have a yellow reflective surface area of at least 30 square inches

## WARNING LIGHTS

1. Warning lights shall meet the requirements of the TMUTCD.
2. Warning lights shall NOT be installed on barricades.
3. Type A-Low Intensity Flashing Warning Lights are commonly used with drums. They are intended to warn of or mark a potentially hazardous area. Their use shall be as indicated on this sheet and/or other sheets of the plans by the designation "FL". The Type A Warning Lights shall not be used with signs manufactured with Type $B_{FL}$ or $C_{FL}$ Sheeting meeting the requirements of Departmental Material Specification DMS-8300.
4. Type-C and Type D 360 degree Steady Burn Lights are intended to be used in a series for delineation to supplement other traffic control devices. Their use shall be as indicated on this sheet and/or other sheets of the plans by the designation "SB".
5. The Engineer/Inspector or the plans shall specify the location and type of warning lights to be installed on the traffic control devices.
6. When required by the Engineer, the Contractor shall furnish a copy of the warning lights certification. The warning light manufacturer will certify the warning lights meet the requirements of the latest ITE Purchase Specifications for Flashing and Steady-Burn Warning Lights.
7. When used to delineate curves, Type-C and Type D Steady Burn Lights should only be placed on the outside of the curve, not the inside.
8. The location of warning lights and warning reflectors on drums shall be as shown elsewhere in the plans.

## WARNING LIGHTS MOUNTED ON PLASTIC DRUMS

1. Type A flashing warning lights are intended to warn drivers that they are approaching or are in a potentially hazardous area.
2. Type A random flashing warning lights are not intended for delineation and shall not be used in a series.
3. A series of sequential flashing warning lights placed on channelizing devices to form a merging taper may be used for delineation. If used, the successive flashing of the sequential warning lights should occur from the beginning of the taper to the end of the merging taper in order to identify the desired vehicle path. The rate of flashing for each light shall be 65 flashes per minute, plus or minus 10 flashes.
4. Type C and D steady-burn warning lights are intended to be used in a series to delineate the edge of the travel lane on detours, on lane changes, on lane closures, and on other similar conditions.
5. Type A, Type C and Type D warning lights shall be installed at locations as detailed on other sheets in the plans.
6. Warning lights shall not be installed on a drum that has a sign, chevron or vertical panel.
7. The maximum spacing for warning lights on drums should be identical to the channelizing device spacing.

## WARNING REFLECTORS MOUNTED ON PLASTIC DRUMS AS A SUBSTITUTE FOR TYPE C (STEADY BURN) WARNING LIGHTS

1. A warning reflector or approved substitute may be mounted on a plastic drum as a substitute for a Type C, steady burn warning light at the discretion of the Contractor unless otherwise noted in the plans.
2. The warning reflector shall be yellow in color and shall be manufactured using a sign substrate approved for use with plastic drums listed on the CWZTCD.
3. The warning reflector shall have a minimum retroreflective surface area (one-side) of 30 square inches.
4. Round reflectors shall be fully reflectorized, including the area where attached to the drum.
5. Square substrates must have a minimum of 30 square inches of reflectorized sheeting. They do not have to be reflectorized where it attaches to the drum.
6. The side of the warning reflector facing approaching traffic shall have sheeting meeting the color and retroreflectivity requirements for DMS 8300-Type B or Type C.
7. When used near two-way traffic, both sides of the warning reflector shall be reflectorized.
8. The warning reflector should be mounted on the side of the handle nearest approaching traffic.
9. The maximum spacing for warning reflectors should be identical to the channelizing device spacing requirements.

Arrow Boards may be located behind channelizing devices in place for a shoulder taper or merging taper, otherwise they shall be delineated with four (4) channelizing devices placed perpendicular to traffic on the upstream side of traffic.

1. The Flashing Arrow Board should be used for all lane closures on multi-lane roadways, or slow moving maintenance or construction activities on the travel lanes.
2. Flashing Arrow Boards should not be used on two-lane, two-way roadways, detours, diversions or work on shoulders unless the "CAUTION" display (see detail below) is used.
3. The Engineer/Inspector shall choose all appropriate signs, barricades and/or other traffic control devices that should be used in conjunction with the Flashing Arrow Board.
4. The Flashing Arrow Board should be able to display the following symbols:

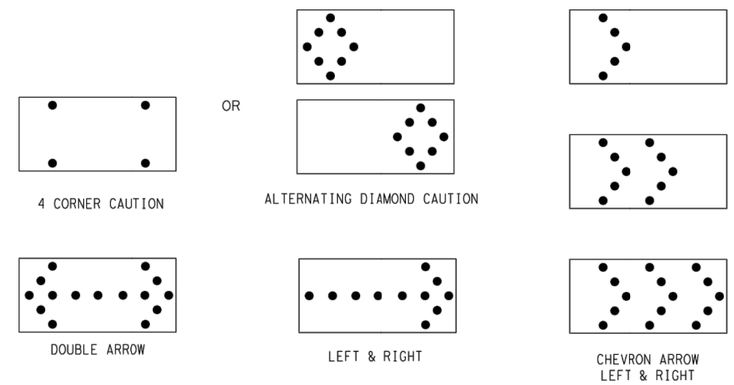


5. The "CAUTION" display consists of four corner lamps flashing simultaneously, or the Alternating Diamond Caution mode as shown.
6. The straight line caution display is NOT ALLOWED.
7. The Flashing Arrow Board shall be capable of minimum 50 percent dimming from rated lamp voltage. The flashing rate of the lamps shall not be less than 25 nor more than 40 flashes per minute.
8. Minimum lamp "on time" shall be approximately 50 percent for the flashing arrow and equal intervals of 25 percent for each sequential phase of the flashing chevron.
9. The sequential arrow display is NOT ALLOWED.
10. The flashing arrow display is the TxDOT standard; however, the sequential Chevron display may be used during daylight operations.
11. The Flashing Arrow Board shall be mounted on a vehicle, trailer or other suitable support.
12. A Flashing Arrow Board SHALL NOT BE USED to laterally shift traffic.
13. A full matrix PCMS may be used to simulate a Flashing Arrow Board provided it meets visibility, flash rate and dimming requirements on this sheet for the same size arrow.
14. Minimum mounting height of trailer mounted Arrow Boards should be 7 feet from roadway to bottom of panel.

**REQUIREMENTS**

| TYPE | MINIMUM SIZE | MINIMUM NUMBER OF PANEL LAMPS | MINIMUM VISIBILITY DISTANCE |
|---|---|---|---|
| B | 30 x 60 | 13 | 3/4 mile |
| C | 48 x 96 | 15 | 1 mile |

**ATTENTION**

Flashing Arrow Boards shall be equipped with automatic dimming devices.

WHEN NOT IN USE, REMOVE THE ARROW BOARD FROM THE RIGHT-OF-WAY OR PLACE THE ARROW BOARD BEHIND CONCRETE TRAFFIC BARRIER OR GUARDRAIL.

# FLASHING ARROW BOARDS



## TRUCK-MOUNTED ATTENUATORS

1. Truck-mounted attenuators (TMA) used on TxDOT facilities must meet the requirements outlined in the National Cooperative Highway Research Report No. 350 (NCHRP 350) or the Manual for Assessing Safety Hardware (MASH).
2. Refer to the CWZTCD for the requirements of Level 2 or Level 3 TMAs.
3. Refer to the CWZTCD for a list of approved TMAs.
4. TMAs are required on freeways unless otherwise noted in the plans.
5. A TMA should be used anytime that it can be positioned 30 to 100 feet in advance of the area of crew exposure without adversely affecting the work performance.
6. The only reason a TMA should not be required is when a work area is spread down the roadway and the work crew is an extended distance from the TMA.

Texas Department of Transportation

Traffic Operations Division Standard

# BARRICADE AND CONSTRUCTION ARROW PANEL, REFLECTORS, WARNING LIGHTS & ATTENUATOR

# BC(7)-14

| FILE: bc-14.dgn | DN: TxDOT | CK: TxDOT | DW: TxDOT | CK: TxDOT |
|---|---|---|---|---|
| © TxDOT November 2002 | CONT | SECT | JOB | HIGHWAY |
| REVISIONS 9-07 8-14 7-13 | DIST | | COUNTY | SHEET NO. 37 |

101

DATE:
FILE:

DISCLAIMER:
The use of this standard is governed by the "Texas Engineering Practice Act". No warranty of any kind is made by TxDOT for any purpose whatsoever. TxDOT assumes no responsibility for the conversion of this standard to other formats or for incorrect results or damages resulting from its use.

DATE:
FILE:

## GENERAL NOTES

1. For long term stationary work zones on freeways, drums shall be used as the primary channelizing device.
2. For intermediate term stationary work zones on freeways, drums should be used as the primary channelizing device but may be replaced in tangent sections by vertical panels, or 42" two-piece cones. In tangent sections one-piece cones may be used with the approval of the Engineer but only if personnel are present on the project at all times to maintain the cones in proper position and location.
3. For short term stationary work zones on freeways, drums are the preferred channelizing device but may be replaced in tapers, transitions and tangent sections by vertical panels, two-piece cones or one-piece cones as approved by the Engineer.
4. Drums and all related items shall comply with the requirements of the current version of the "Texas Manual on Uniform Traffic Control Devices" (TMUTCD) and the "Compliant Work Zone Traffic Control Devices List" (CWZTCD).
5. Drums, bases, and related materials shall exhibit good workmanship and shall be free from objectionable marks or defects that would adversely affect their appearance or serviceability.
6. The Contractor shall have a maximum of 24 hours to replace any plastic drums identified for replacement by the Engineer/Inspector. The replacement device must be an approved device.

## GENERAL DESIGN REQUIREMENTS

Pre-qualified plastic drums shall meet the following requirements:

1. Plastic drums shall be a two-piece design; the "body" of the drum shall be the top portion and the "base" shall be the bottom.
2. The body and base shall lock together in such a manner that the body separates from the base when impacted by a vehicle traveling at a speed of 20 MPH or greater but prevents accidental separation due to normal handling and/or air turbulence created by passing vehicles.
3. Plastic drums shall be constructed of lightweight flexible, and deformable materials. The Contractor shall NOT use metal drums or single piece plastic drums as channelization devices or sign supports.
4. Drums shall present a profile that is a minimum of 18 inches in width at the 36 inch height when viewed from any direction. The height of drum unit (body installed on base) shall be a minimum of 36 inches and a maximum of 42 inches.
5. The top of the drum shall have a built-in handle for easy pickup and shall be designed to drain water and not collect debris. The handle shall have a minimum of two widely spaced 9/16 inch diameter holes to allow attachment of a warning light, warning reflector unit or approved compliant sign.
6. The exterior of the drum body shall have a minimum of four alternating orange and white retroreflective circumferential stripes not less than 4 inches nor greater than 8 inches in width. Any non-reflectorized space between any two adjacent stripes shall not exceed 2 inches in width.
7. Bases shall have a maximum width of 36 inches, a maximum height of 4 inches, and a minimum of two footholds of sufficient size to allow base to be held down while separating the drum body from the base.
8. Plastic drums shall be constructed of ultra-violet stabilized, orange, high-density polyethylene (HDPE) or other approved material.
9. Drum body shall have a maximum unballasted weight of 11 lbs.
10. Drum and base shall be marked with manufacturer's name and model number.

## RETROREFLECTIVE SHEETING

1. The stripes used on drums shall be constructed of sheeting meeting the color and retroreflectivity requirements of Departmental Materials Specification DMS-8300, "Sign Face Materials." Type A reflective sheeting shall be supplied unless otherwise specified in the plans.
2. The sheeting shall be suitable for use on and shall adhere to the drum surface such that, upon vehicular impact, the sheeting shall remain adhered in-place and exhibit no delaminating, cracking, or loss of retroreflectivity other than that loss due to abrasion of the sheeting surface.

## BALLAST

1. Unballasted bases shall be large enough to hold up to 50 lbs. of sand. This base, when filled with the ballast material, should weigh between 35 lbs (minimum) and 50 lbs (maximum). The ballast may be sand in one to three sandbags separate from the base, sand in a sand-filled plastic base, or other ballasting devices as approved by the Engineer. Stacking of sandbags will be allowed, however height of sandbags above pavement surface may not exceed 12 inches.
2. Bases with built-in ballast shall weigh between 40 lbs. and 50 lbs. Built-in ballast can be constructed of an integral crumb rubber base or a solid rubber base.
3. Recycled truck tire sidewalls may be used for ballast on drums approved for this type of ballast on the CWZTCD list.
4. The ballast shall not be heavy objects, water, or any material that would become hazardous to motorists, pedestrians, or workers when the drum is struck by a vehicle.
5. When used in regions susceptible to freezing, drums shall have drainage holes in the bottoms so that water will not collect and freeze becoming a hazard when struck by a vehicle.
6. Ballast shall not be placed on top of drums.
7. Adhesives may be used to secure base of drums to pavement.

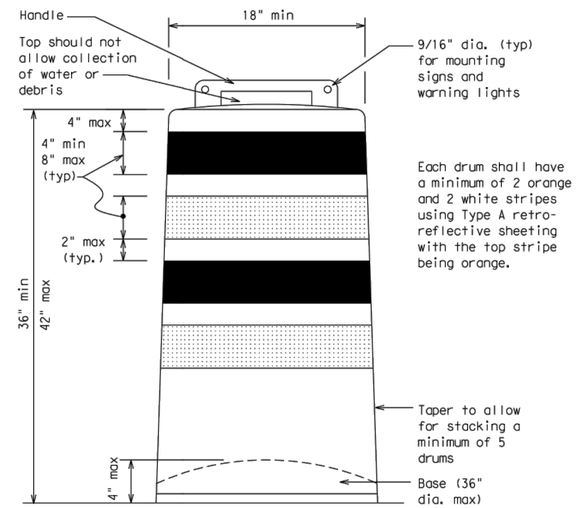


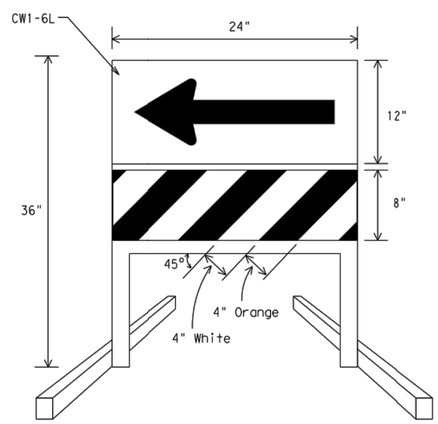


## DIRECTION INDICATOR BARRICADE

1. The Direction Indicator Barricade may be used in tapers, transitions, and other areas where specific directional guidance to drivers is necessary.
2. If used, the Direction Indicator Barricade should be used in series to direct the driver through the transition and into the intended travel lane.
3. The Direction Indicator Barricade shall consist of One-Direction Large Arrow (CW1-6) sign in the size shown with a black arrow on a background of Type $B_{FL}$ or Type $C_{FL}$ Orange retroreflective sheeting above a rail with Type A retroreflective sheeting in alternating 4" white and orange stripes sloping downward at an angle of 45 degrees in the direction road users are to pass. Sheeting types shall be as per DMS 8300.
4. Double arrows on the Direction Indicator Barricade will not be allowed.
5. Approved manufacturers are shown on the CWZTCD List. Ballast shall be as approved by the manufacturers instructions.

This detail is not intended for fabrication. See note 3 and the CWZTCD list for providers of approved Detectable Pedestrian Barricades

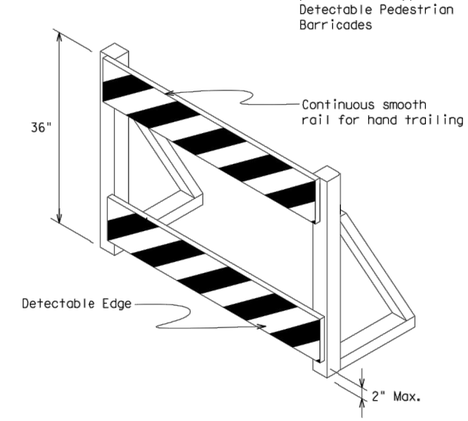


## DETECTABLE PEDESTRIAN BARRICADES

1. When existing pedestrian facilities are disrupted, closed, or relocated in a TTC zone, the temporary facilities shall be detectable and include accessibility features consistent with the features present in the existing pedestrian facility.
2. Where pedestrians with visual disabilities normally use the closed sidewalk, a device that is detectable by a person with a visual disability traveling with the aid of a long cane shall be placed across the full width of the closed sidewalk.
3. Detectable pedestrian barricades similar to the one pictured above, longitudinal channelizing devices, some concrete barriers, and wood or chain link fencing with a continuous detectable edging can satisfactorily delineate a pedestrian path.
4. Tape, rope, or plastic chain strung between devices are not detectable, do not comply with the design standards in the "Americans with Disabilities Act Accessibility Guidelines for Buildings and Facilities (ADAAG)" and should not be used as a control for pedestrian movements.
5. Warning lights shall not be attached to detectable pedestrian barricades.
6. Detectable pedestrian barricades may use 8" nominal barricade rails as shown on BC(10) provided that the top rail provides a smooth continuous rail suitable for hand trailing with no splinters, burrs, or sharp edges.

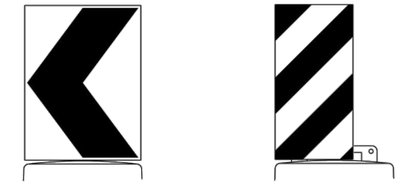

18" x 24" Sign (Maximum Sign Dimension) Chevron CW1-8, Opposing Traffic Lane Divider, Driveway sign D70a, Keep Right R4 series or other signs as approved by Engineer

12" x 24" Vertical Panel mount with diagonals sloping down towards travel way

**Plywood, Aluminum or Metal sign substrates shall NOT be used on plastic drums**

## SIGNS, CHEVRONS, AND VERTICAL PANELS MOUNTED ON PLASTIC DRUMS

1. Signs used on plastic drums shall be manufactured using substrates listed on the CWZTCD.
2. Chevrons and other work zone signs with an orange background shall be manufactured with Type $B_{FL}$ or Type $C_{FL}$ Orange sheeting meeting the color and retroreflectivity requirements of DMS-8300, "Sign Face Material," unless otherwise specified in the plans.
3. Vertical Panels shall be manufactured with orange and white sheeting meeting the requirements of DMS-8300 Type A Diagonal stripes on Vertical Panels shall slope down toward the intended traveled lane.
4. Other sign messages (text or symbolic) may be used as approved by the Engineer. Sign dimensions shall not exceed 18 inches in width or 24 inches in height, except for the R9 series signs discussed in note 8 below.
5. Signs shall be installed using a 1/2 inch bolt (nominal) and nut, two washers, and one locking washer for each connection.
6. Mounting bolts and nuts shall be fully engaged and adequately torqued. Bolts should not extend more than 1/2 inch beyond nuts.
7. Chevrons may be placed on drums on the outside of curves, on merging tapers or on shifting tapers. When used in these locations they may be placed on every drum or spaced not more than on every third drum. A minimum of three (3) should be used at each location called for in the plans.
8. R9-9, R9-10, R9-11 and R9-11a Sidewalk Closed signs which are 24 inches wide may be mounted on plastic drums, with approval of the Engineer.



Texas Department of Transportation — Traffic Operations Division Standard

# BARRICADE AND CONSTRUCTION CHANNELIZING DEVICES

# BC(8)-14

| FILE: bc-14.dgn | DN: TxDOT | CK: TxDOT | DW: TxDOT | CK: TxDOT |
|---|---|---|---|---|
| © TxDOT November 2002 | CONT | SECT | JOB | HIGHWAY |
| REVISIONS | | | | |
| 4-03 7-13 | DIST | | COUNTY | SHEET NO. |
| 9-07 8-14 | | | | 38 |

102

DISCLAIMER:
The use of this standard is governed by the "Texas Engineering Practice Act". No warranty of any kind is made by TxDOT for any purpose whatsoever. TxDOT assumes no responsibility for the conversion of this standard to other formats or for incorrect results or damages resulting from its use.

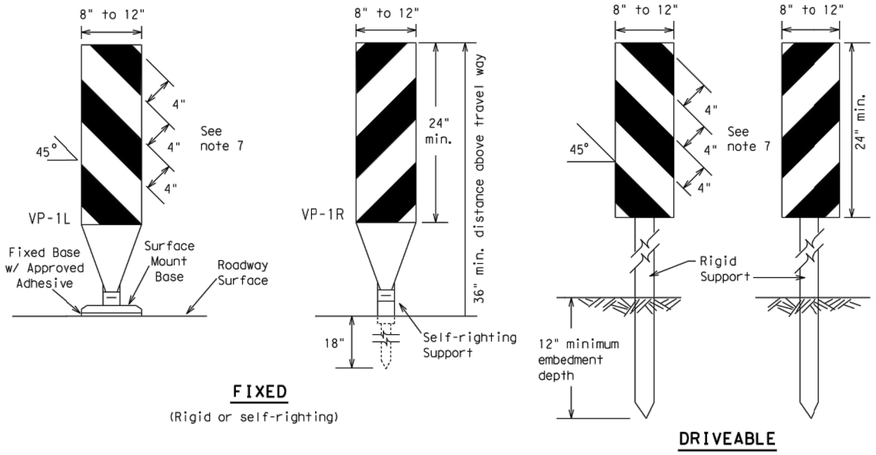


**FIXED**

(Rigid or self-righting)

**DRIVEABLE**

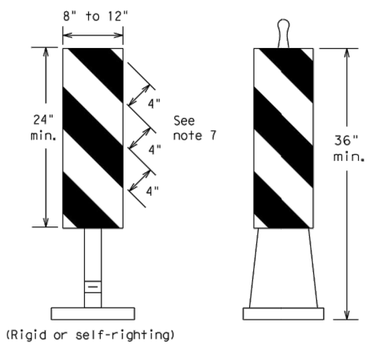


(Rigid or self-righting)

**PORTABLE**

1. Vertical Panels (VP's) are normally used to channelize traffic or divide opposing lanes of traffic.
2. VP's may be used in daytime or nighttime situations. They may be used at the edge of shoulder drop-offs and other areas such as lane transitions where positive daytime and nighttime delineation is required. The Engineer/Inspector shall refer to the Roadway Design Manual Appendix B "Treatment of Pavement Drop-offs in Work Zones" for additional guidelines on the use of VP's for drop-offs.
3. VP's should be mounted back to back if used at the edge of cuts adjacent to two-way two lane roadways. Stripes are to be reflective orange and reflective white and should always slope downward toward the travel lane.
4. VP's used on expressways and freeways or other high speed roadways, may have more than 270 square inches of retroreflective area facing traffic.
5. Self-righting supports are available with portable base. See "Compliant Work Zone Traffic Control Devices List" (CWZTCD).
6. Sheeting for the VP's shall be retroreflective Type A conforming to Departmental Material Specification DMS-8300, unless noted otherwise.
7. Where the height of reflective material on the vertical panel is 36 inches or greater, a panel stripe of 6 inches shall be used.

## VERTICAL PANELS (VPs)

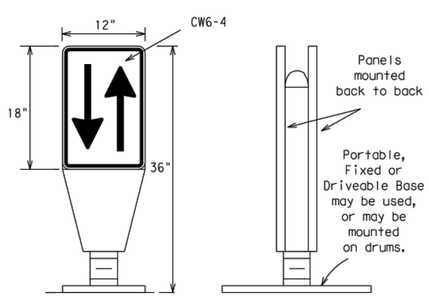


1. Opposing Traffic Lane Dividers (OTLD) are delineation devices designed to convert a normal one-way roadway section to two-way operation. OTLD's are used on temporary centerlines. The upward and downward arrows on the sign's face indicate the direction of traffic on either side of the divider. The base is secured to the pavement with an adhesive or rubber weight to minimize movement caused by a vehicle impact or wind gust.
2. The OTLD may be used in combination with 42" cones or VPs.
3. Spacing between the OTLD shall not exceed 500 feet. 42" cones or VPs placed between the OTLD's should not exceed 100 foot spacing.
4. The OTLD shall be orange with a black non-reflective legend. Sheeting for the OTLD shall be retroreflective Type $B_{FL}$ or Type $C_{FL}$ conforming to Departmental Material Specification DMS-8300, unless noted otherwise. The legend shall meet the requirements of DMS-8300.

## OPPOSING TRAFFIC LANE DIVIDERS (OTLD)

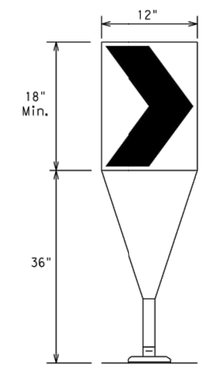


Fixed Base w/ Approved Adhesive (Driveable Base, or Flexible Support can be used)

1. The chevron shall be a vertical rectangle with a minimum size of 12 by 18 inches.
2. Chevrons are intended to give notice of a sharp change of alignment with the direction of travel and provide additional emphasis and guidance for vehicle operators with regard to changes in horizontal alignment of the roadway.
3. Chevrons, when used, shall be erected on the outside of a sharp curve or turn, or on the far side of an intersection. They shall be in line with and at right angles to approaching traffic. Spacing should be such that the motorist always has three in view, until the change in alignment eliminates its need.
4. To be effective, the chevron should be visible for at least 500 feet.
5. Chevrons shall be orange with a black nonreflective legend. Sheeting for the chevron shall be retroreflective Type $B_{FL}$ or Type $C_{FL}$ conforming to Departmental Material Specification DMS-8300, unless noted otherwise. The legend shall meet the requirements of DMS-8300.
6. For Long Term Stationary use on tapers or transitions on freeways and divided highways self-righting chevrons may be used to supplement plastic drums but not to replace plastic drums.

## CHEVRONS

## GENERAL NOTES

1. Work Zone channelizing devices illustrated on this sheet may be installed in close proximity to traffic and are suitable for use on high or low speed roadways. The Engineer/Inspector shall ensure that spacing and placement is uniform and in accordance with the "Texas Manual on Uniform Traffic Control Devices" (TMUTCD).
2. Channelizing devices shown on this sheet may have a driveable, fixed or portable base. The requirement for self-righting channelizing devices must be specified in the General Notes or other plan sheets.
3. Channelizing devices on self-righting supports should be used in work zone areas where channelizing devices are frequently impacted by errant vehicles or vehicle related wind gusts making alignment of the channelizing devices difficult to maintain. Locations of these devices shall be detailed elsewhere in the plans. These devices shall conform to the TMUTCD and the "Compliant Work Zone Traffic Control Devices List" (CWZTCD).
4. The Contractor shall maintain devices in a clean condition and replace damaged, nonreflective, faded, or broken devices and bases as required by the Engineer/Inspector. The Contractor shall be required to maintain proper device spacing and alignment.
5. Portable bases shall be fabricated from virgin and/or recycled rubber. The portable bases shall weigh a minimum of 30 lbs.
6. Pavement surfaces shall be prepared in a manner that ensures proper bonding between the adhesives, the fixed mount bases and the pavement surface. Adhesives shall be prepared and applied according to the manufacturer's recommendations.
7. The installation and removal of channelizing devices shall not cause detrimental effects to the final pavement surfaces, including pavement surface discoloration or surface integrity. Driveable bases shall not be permitted on final pavement surfaces. The Engineer/Inspector shall approve all application and removal procedures of fixed bases.

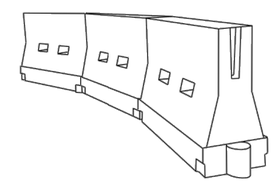

## LONGITUDINAL CHANNELIZING DEVICES (LCD)

1. LCDs are crashworthy, lightweight, deformable devices that are highly visible, have good target value and can be connected together. They are not designed to contain or redirect a vehicle on impact.
2. LCDs may be used instead of a line of cones or drums.
3. LCDs shall be placed in accordance to application and installation requirements specific to the device, and used only when shown on the CWZTCD list.
4. LCDs should not be used to provide positive protection for obstacles, pedestrians or workers.
5. LCDs shall be supplemented with retroreflective delineation as required for temporary barriers on BC(7) when placed roughly parallel to the travel lanes.
6. LCDs used as barricades placed perpendicular to traffic should have at least one row of reflective sheeting meeting the requirements for barricade rails as shown on BC(10) placed near the top of the LCD along the full length of the device.

## WATER BALLASTED SYSTEMS USED AS BARRIERS

1. Water ballasted systems used as barriers shall not be used solely to channelize road users, but also to protect the work space per the appropriate NCHRP 350 crashworthiness requirements based on roadway speed and barrier application.
2. Water ballasted systems used to channelize vehicular traffic shall be supplemented with retroreflective delineation or channelizing devices to improve daytime/nighttime visibility. They may also be supplemented with pavement markings.
3. Water ballasted systems used as barriers shall be placed in accordance to application and installation requirements specific to the device, and used only when shown on the CWZTCD list.
4. Water ballasted systems used as barriers should not be used for a merging taper except in low speed (less than 45 MPH) urban areas. When used on a taper in a low speed urban area, the taper shall be delineated and the taper length should be designed to optimize road user operations considering the available geometric conditions.
5. When water ballasted systems used as barriers have blunt ends exposed to traffic, they should be attenuated as per manufacturer recommendations or flared to a point outside the clear zone.

If used to channelize pedestrians, longitudinal channelizing devices or water ballasted systems must have a continuous detectable bottom for users of long canes and the top of the unit shall not be less than 32 inches in height.

## HOLLOW OR WATER BALLASTED SYSTEMS USED AS LONGITUDINAL CHANNELIZING DEVICES OR BARRIERS

| Posted Speed * | Formula | Minimum Desirable Taper Lengths ** | | | Suggested Maximum Spacing of Channelizing Devices | |
|---|---|---|---|---|---|---|
| | | 10' Offset | 11' Offset | 12' Offset | On a Taper | On a Tangent |
| 30 | $L = \frac{WS^2}{60}$ | 150' | 165' | 180' | 30' | 60' |
| 35 | | 205' | 225' | 245' | 35' | 70' |
| 40 | | 265' | 295' | 320' | 40' | 80' |
| 45 | L = WS | 450' | 495' | 540' | 45' | 90' |
| 50 | | 500' | 550' | 600' | 50' | 100' |
| 55 | | 550' | 605' | 660' | 55' | 110' |
| 60 | | 600' | 660' | 720' | 60' | 120' |
| 65 | | 650' | 715' | 780' | 65' | 130' |
| 70 | | 700' | 770' | 840' | 70' | 140' |
| 75 | | 750' | 825' | 900' | 75' | 150' |
| 80 | | 800' | 880' | 960' | 80' | 160' |

** Taper lengths have been rounded off.
L=Length of Taper (FT.) W=Width of Offset (FT.)
S=Posted Speed (MPH)

## SUGGESTED MAXIMUM SPACING OF CHANNELIZING DEVICES AND MINIMUM DESIRABLE TAPER LENGTHS



Texas Department of Transportation — Traffic Operations Division Standard

# BARRICADE AND CONSTRUCTION CHANNELIZING DEVICES

# BC(9)-14

| FILE: bc-14.dgn | DN: TxDOT | CK: TxDOT | DW: TxDOT | CK: TxDOT |
|---|---|---|---|---|
| © TxDOT November 2002 | CONT | SECT | JOB | HIGHWAY |
| REVISIONS 9-07 8-14 7-13 | DIST | | COUNTY | SHEET NO. 39 |



DATE:
FILE:

DISCLAIMER:
The use of this standard is governed by the "Texas Engineering Practice Act". No warranty of any kind is made by TxDOT for any purpose whatsoever. TxDOT assumes no responsibility for the conversion of this standard to other formats or for incorrect results or damages resulting from its use.

## TYPE 3 BARRICADES

1. Refer to the Compliant Work Zone Traffic Control Devices List (CWZTCD) for details of the Type 3 Barricades and a list of all materials used in the construction of Type 3 Barricades.
2. Type 3 Barricades shall be used at each end of construction projects closed to all traffic.
3. Barricades extending across a roadway should have stripes that slope downward in the direction toward which traffic must turn in detouring. When both right and left turns are provided, the chevron striping may slope downward in both directions from the center of the barricade. Where no turns are provided at a closed road striping should slope downward in both directions toward the center of roadway.
4. Striping of rails, for the right side of the roadway, should slope downward to the left. For the left side of the roadway, striping should slope downward to the right.
5. Identification markings may be shown only on the back of the barricade rails. The maximum height of letters and/or company logos used for identification shall be 1".
6. Barricades shall not be placed parallel to traffic unless an adequate clear zone is provided.
7. Warning lights shall NOT be installed on barricades.
8. Where barricades require the use of weights to keep from turning over, the use of sandbags with dry, cohesionless sand is recommended. The sandbags will be tied shut to keep the sand from spilling and to maintain a constant weight. Sand bags shall not be stacked in a manner that covers any portion of a barricade rails reflective sheeting. Rock, concrete, iron, steel or other solid objects will NOT be permitted. Sandbags should weigh a minimum of 35 lbs and a maximum of 50 lbs. Sandbags shall be made of a durable material that tears upon vehicular impact. Rubber (such as tire inner tubes) shall not be used for sandbags. Sandbags shall only be placed along or upon the base supports of the device and shall not be suspended above ground level or hung with rope, wire, chains or other fasteners.
9. Sheeting for barricades shall be retroreflective Type A conforming to Departmental Material Specification DMS-8300 unless otherwise noted.

Barricades shall NOT be used as a sign support.

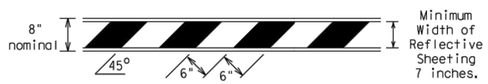


### TYPICAL STRIPING DETAIL FOR BARRICADE RAIL

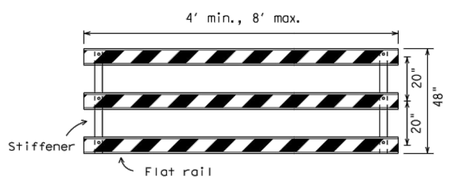


Stiffener may be inside or outside of support, but no more than 2 stiffeners shall be allowed on one barricade.

### TYPICAL PANEL DETAIL FOR SKID OR POST TYPE BARRICADES

Each roadway of a divided highway shall be barricaded in the same manner.

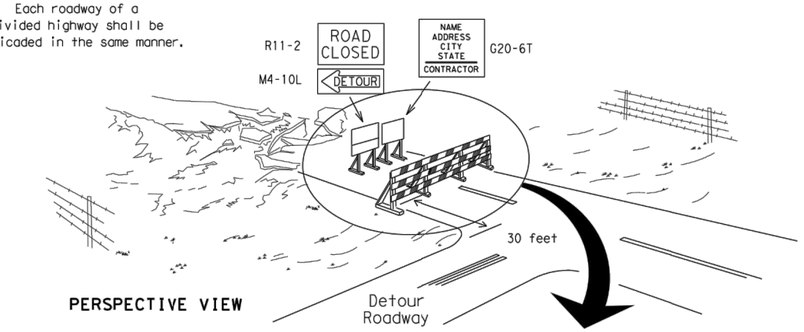


PERSPECTIVE VIEW

The three rails on Type 3 barricades shall be reflectorized orange and reflective white stripes on one side facing one-way traffic and both sides for two-way traffic.
Barricade striping should slant downward in the direction of detour.

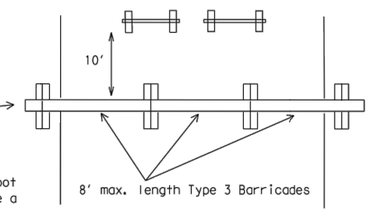


PLAN VIEW

1. Signs should be mounted on independent supports at a 7 foot mounting height in center of roadway. The signs should be a minimum of 10 feet behind Type 3 Barricades.
2. Advance signing shall be as specified elsewhere in the plans.

### TYPE 3 BARRICADE (POST AND SKID) TYPICAL APPLICATION

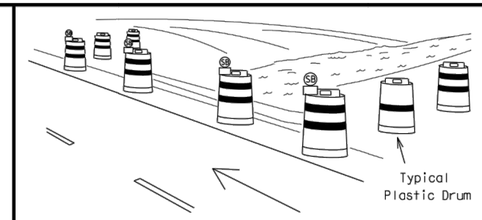


PERSPECTIVE VIEW

1. Where positive redirectional capability is provided, drums may be omitted.
2. Plastic construction fencing may be used with drums for safety as required in the plans.
3. Vertical Panels on flexible support may be substituted for drums when the shoulder width is less than 4 feet.
4. When the shoulder width is greater than 12 feet, steady-burn lights may be omitted if drums are used.
5. Drums must extend the length of the culvert widening.

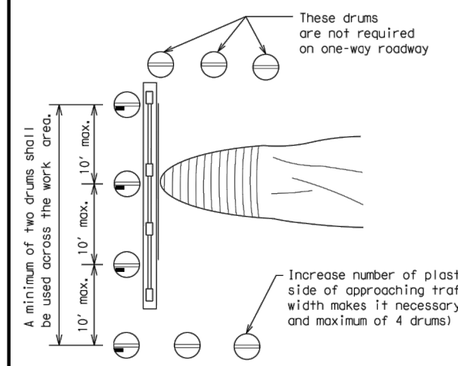


PLAN VIEW

| LEGEND | |
|---|---|
| | Plastic drum |
| | Plastic drum with steady burn light or yellow warning reflector |
| SB | Steady burn warning light or yellow warning reflector |

### CULVERT WIDENING OR OTHER ISOLATED WORK WITHIN THE PROJECT LIMITS

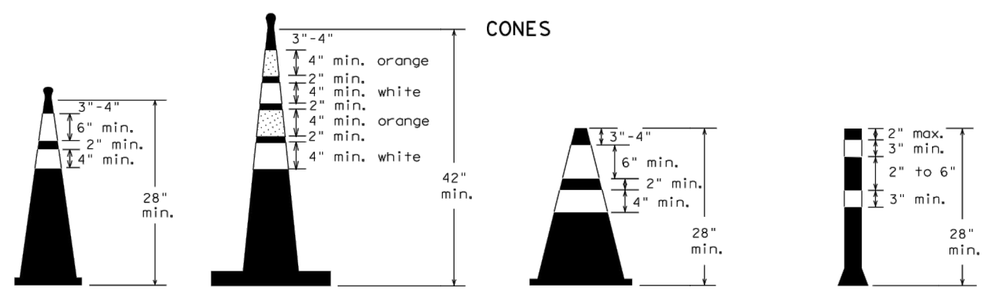


Two-Piece cones | One-Piece cones | Tubular Marker

28" Cones shall have a minimum weight of 9 1/2 lbs.

42" 2-piece cones shall have a minimum weight of 30 lbs. including base.

1. Traffic cones and tubular markers shall be predominantly orange, and meet the height and weight requirements shown above.
2. One-piece cones have the body and base of the cone molded in one consolidated unit. Two-piece cones have a cone shaped body and a separate rubber base, or ballast, that is added to keep the device upright and in place.
3. Two-piece cones may have a handle or loop extending up to 8" above the minimum height shown, in order to aid in retrieving the device.
4. Cones or tubular markers used at night shall have white or white and orange reflective bands as shown above. The reflective bands shall have a smooth, sealed outer surface and meet the requirements of Departmental Material Specification DMS-8300 Type A.
5. 28" cones and tubular markers are generally suitable for short duration and short-term stationary work as defined on BC(4). These should not be used for intermediate-term or long-term stationary work unless personnel is on-site to maintain them in their proper upright position.
6. 42" two-piece cones, vertical panels or drums are suitable for all work zone durations.
7. Cones or tubular markers used on each project should be of the same size and shape.

THIS DEVICE SHALL NOT BE USED ON PROJECTS LET AFTER MARCH 2014.

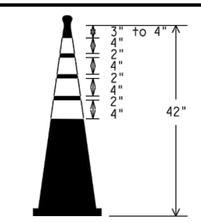


EDGELINE CHANNELIZER

1. This device is intended only for use in place of a vertical panel to channelize traffic by indicating the edge of the travel lane. It is not intended to be used in transitions or tapers.
2. This device shall not be used to separate lanes of traffic (opposing or otherwise) or warn of objects.
3. This device is based on a 42 inch, two-piece cone with an alternate striping pattern: four 4 inch retroreflective bands, with an approximate 2 inch gap between bands. The color of the band should correspond to the color of the edgeline (yellow for left edgeline, white for right edgeline) for which the device is substituted or for which it supplements. The reflectorized bands shall be retroreflective Type A conforming to Departmental Material Specification DMS-8300, unless otherwise noted.
4. The base must weigh a minimum of 30 lbs.

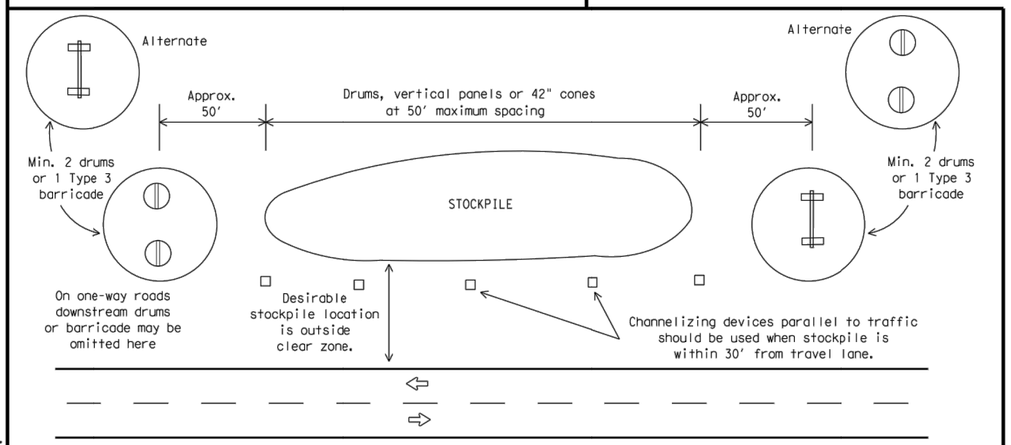


### TRAFFIC CONTROL FOR MATERIAL STOCKPILES

SHEET 10 OF 12

Texas Department of Transportation — Traffic Operations Division Standard

# BARRICADE AND CONSTRUCTION CHANNELIZING DEVICES

## BC(10)-14

| FILE: bc-14.dgn | DN: TxDOT | CK: TxDOT | DW: TxDOT | CK: TxDOT |
|---|---|---|---|---|
| © TxDOT November 2002 | CONT | SECT | JOB | HIGHWAY |
| REVISIONS 9-07 8-14 7-13 | DIST | | COUNTY | SHEET NO. 40 |

DATE:
FILE:

DISCLAIMER:
The use of this standard is governed by the "Texas Engineering Practice Act". No warranty of any kind is made by TxDOT for any purpose whatsoever. TxDOT assumes no responsibility for the conversion of this standard to other formats or for incorrect results or damages resulting from its use.

DATE:
FILE:

# WORK ZONE PAVEMENT MARKINGS

## GENERAL

1. The Contractor shall be responsible for maintaining work zone and existing pavement markings, in accordance with the standard specifications and special provisions, on all roadways open to traffic within the CSJ limits unless otherwise stated in the plans.
2. Color, patterns and dimensions shall be in conformance with the "Texas Manual on Uniform Traffic Control Devices" (TMUTCD).
3. Additional supplemental pavement marking details may be found in the plans or specifications.
4. Pavement markings shall be installed in accordance with the TMUTCD and as shown on the plans.
5. When short term markings are required on the plans, short term markings shall conform with the TMUTCD, the plans and details as shown on the Standard Plan Sheet WZ(STPM).
6. When standard pavement markings are not in place and the roadway is opened to traffic, DO NOT PASS signs shall be erected to mark the beginning of the sections where passing is prohibited and PASS WITH CARE signs at the beginning of sections where passing is permitted.
7. All work zone pavement markings shall be installed in accordance with Item 662, "Work Zone Pavement Markings."

## RAISED PAVEMENT MARKERS

1. Raised pavement markers are to be placed according to the patterns on BC(12).
2. All raised pavement markers used for work zone markings shall meet the requirements of Item 672, "RAISED PAVEMENT MARKERS" and Departmental Material Specification DMS-4200 or DMS-4300.

## PREFABRICATED PAVEMENT MARKINGS

1. Removable prefabricated pavement markings shall meet the requirements of DMS-8241.
2. Non-removable prefabricated pavement markings (foil back) shall meet the requirements of DMS-8240.

## MAINTAINING WORK ZONE PAVEMENT MARKINGS

1. The Contractor will be responsible for maintaining work zone pavement markings within the work limits.
2. Work zone pavement markings shall be inspected in accordance with the frequency and reporting requirements of work zone traffic control device inspections as required by Form 599.
3. The markings should provide a visible reference for a minimum distance of 300 feet during normal daylight hours and 160 feet when illuminated by automobile low-beam headlights at night, unless sight distance is restricted by roadway geometrics.
4. Markings failing to meet this criteria within the first 30 days after placement shall be replaced at the expense of the Contractor as per Specification Item 662.

## REMOVAL OF PAVEMENT MARKINGS

1. Pavement markings that are no longer applicable, could create confusion or direct a motorist toward or into the closed portion of the roadway shall be removed or obliterated before the roadway is opened to traffic.
2. The above shall not apply to detours in place for less than three days, where flaggers and/or sufficient channelizing devices are used in lieu of markings to outline the detour route.
3. Pavement markings shall be removed to the fullest extent possible, so as not to leave a discernable marking. This shall be by any method approved by TxDOT Specification Item 677 for "Eliminating Existing Pavement Markings and Markers".
4. The removal of pavement markings may require resurfacing or seal coating portions of the roadway as described in Item 677.
5. Subject to the approval of the Engineer, any method that proves to be successful on a particular type pavement may be used.
6. Blast cleaning may be used but will not be required unless specifically shown in the plans.
7. Over-painting of the markings SHALL NOT BE permitted.
8. Removal of raised pavement markers shall be as directed by the Engineer.
9. Removal of existing pavement markings and markers will be paid for directly in accordance with Item 677, "ELIMINATING EXISTING PAVEMENT MARKINGS AND MARKERS," unless otherwise stated in the plans.
10. Black-out marking tape may be used to cover conflicting existing markings for periods less than two weeks when approved by the Engineer.

# Temporary Flexible-Reflective Roadway Marker Tabs

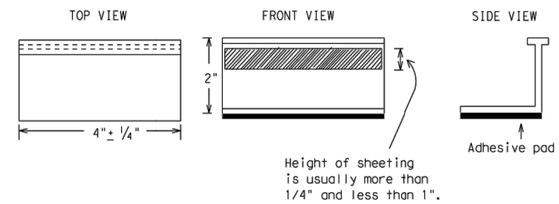


**STAPLES OR NAILS SHALL NOT BE USED TO SECURE TEMPORARY FLEXIBLE-REFLECTIVE ROADWAY MARKER TABS TO THE PAVEMENT SURFACE**

1. Temporary flexible-reflective roadway marker tabs used as guidemarks shall meet the requirements of DMS-8242.
2. Tabs detailed on this sheet are to be inspected and accepted by the Engineer or designated representative. Sampling and testing is not normally required, however at the option of the Engineer, either "A" or "B" below may be imposed to assure quality before placement on the roadway.
   A. Select five (5) or more tabs at random from each lot or shipment and submit to the Construction Division, Materials and Pavement Section to determine specification compliance.
   B. Select five (5) tabs and perform the following test. Affix five (5) tabs at 24 inch intervals on an asphaltic pavement in a straight line. Using a medium size passenger vehicle or pickup, run over the markers with the front and rear tires at a speed of 35 to 40 miles per hour, four (4) times in each direction. No more than one (1) out of the five (5) reflective surfaces shall be lost or displaced as a result of this test.
3. Small design variances may be noted between tab manufacturers.
4. See Standard Sheet WZ(STPM) for tab placement on new pavements. See Standard Sheet TCP(7-1) for tab placement on seal coat work.

## RAISED PAVEMENT MARKERS USED AS GUIDEMARKS

1. Raised pavement markers used as guidemarks shall be from the approved product list, and meet the requirements of DMS-4200.
2. All temporary construction raised pavement markers provided on a project shall be of the same manufacturer.
3. Adhesive for guidemarks shall be bituminous material hot applied or butyl rubber pad for all surfaces, or thermoplastic for concrete surfaces.

Guidemarks shall be designated as:
YELLOW - (two amber reflective surfaces with yellow body).
WHITE - (one silver reflective surface with white body).

| DEPARTMENTAL MATERIAL SPECIFICATIONS | |
|---|---|
| PAVEMENT MARKERS (REFLECTORIZED) | DMS-4200 |
| TRAFFIC BUTTONS | DMS-4300 |
| EPOXY AND ADHESIVES | DMS-6100 |
| BITUMINOUS ADHESIVE FOR PAVEMENT MARKERS | DMS-6130 |
| PERMANENT PREFABRICATED PAVEMENT MARKINGS | DMS-8240 |
| TEMPORARY REMOVABLE, PREFABRICATED PAVEMENT MARKINGS | DMS-8241 |
| TEMPORARY FLEXIBLE, REFLECTIVE ROADWAY MARKER TABS | DMS-8242 |

A list of prequalified reflective raised pavement markers, non-reflective traffic buttons, roadway marker tabs and other pavement markings can be found at the Material Producer List web address shown on BC(1).



Texas Department of Transportation — Traffic Operations Division Standard

# BARRICADE AND CONSTRUCTION PAVEMENT MARKINGS

## BC(11)-14

| FILE: bc-14.dgn | DN: TxDOT | CK: TxDOT | DW: TxDOT | CK: TxDOT |
|---|---|---|---|---|
| © TxDOT February 1998 | CONT | SECT | JOB | HIGHWAY |
| REVISIONS 2-98 9-07, 1-02 7-13, 11-02 8-14 | DIST | COUNTY | | SHEET NO. 41 |

105

# PAVEMENT MARKING PATTERNS

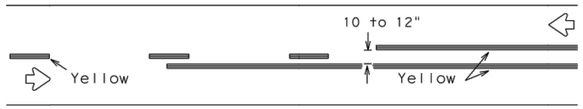


REFLECTORIZED PAVEMENT MARKINGS - PATTERN A

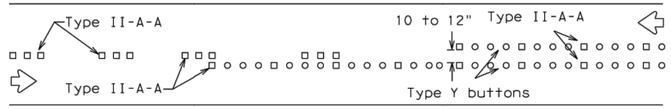


RAISED PAVEMENT MARKERS - PATTERN A

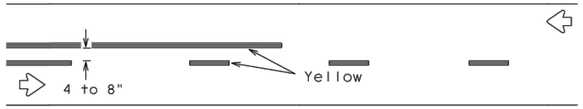


REFLECTORIZED PAVEMENT MARKINGS - PATTERN B

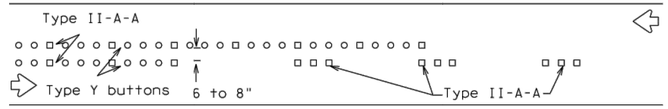


RAISED PAVEMENT MARKERS - PATTERN B

Pattern A is the TXDOT Standard, however Pattern B may be used if approved by the Engineer.
Prefabricated markings may be substituted for reflectorized pavement markings.

## CENTER LINE & NO-PASSING ZONE BARRIER LINES FOR TWO-LANE, TWO-WAY HIGHWAYS

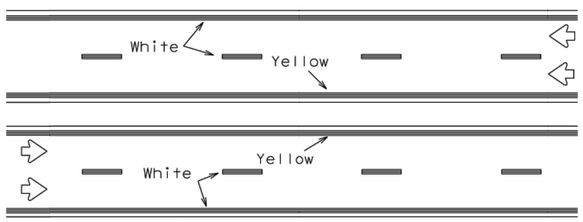


REFLECTORIZED PAVEMENT MARKINGS

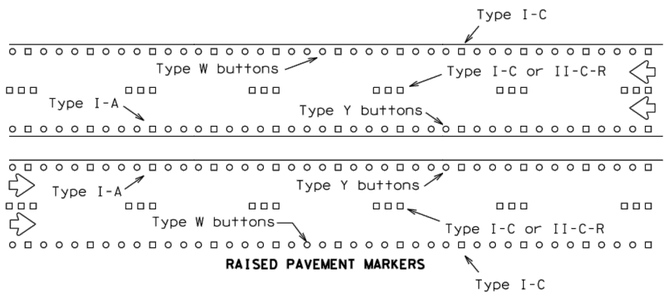


RAISED PAVEMENT MARKERS

Prefabricated markings may be substituted for reflectorized pavement markings.

## EDGE & LANE LINES FOR DIVIDED HIGHWAY

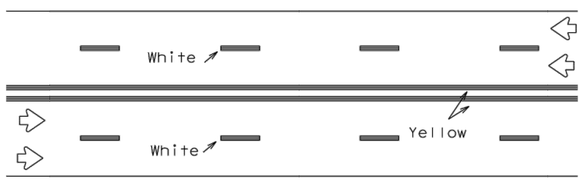


REFLECTORIZED PAVEMENT MARKINGS

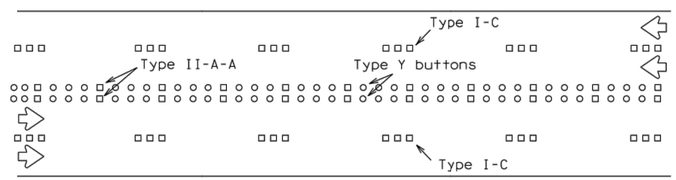


RAISED PAVEMENT MARKERS

Prefabricated markings may be substituted for reflectorized pavement markings.

## LANE & CENTER LINES FOR MULTILANE UNDIVIDED HIGHWAYS

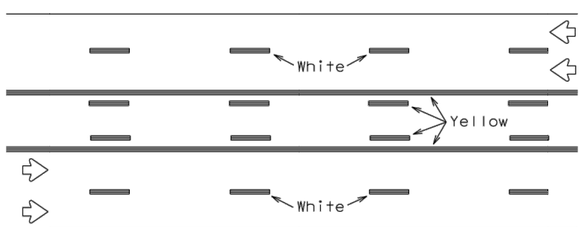


REFLECTORIZED PAVEMENT MARKINGS

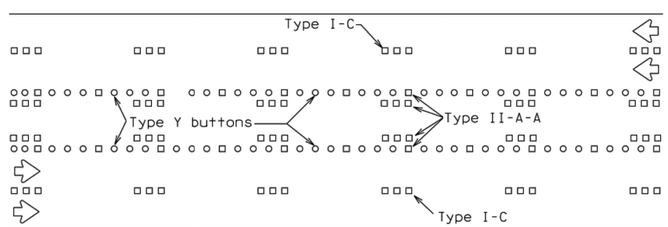


RAISED PAVEMENT MARKERS

Prefabricated markings may be substituted for reflectorized pavement markings.

## TWO-WAY LEFT TURN LANE

# STANDARD WORK ZONE PAVEMENT MARKINGS DETAILS

### SOLID LINES

**DOUBLE NO-PASSING LINE**

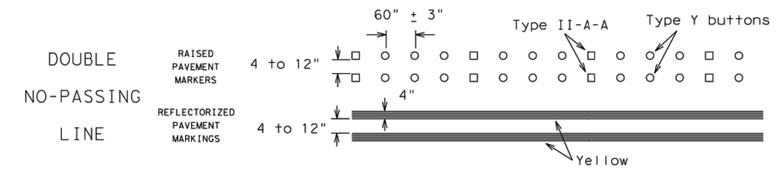


**EDGE LINE OR SINGLE NO-PASSING LINE**

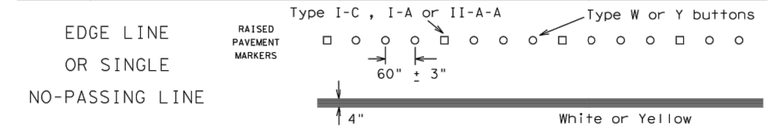


**WIDE LINE**

(FOR LEFT TURN CHANNELIZING LINE OR CHANNELIZING LINE USED TO DISCOURAGE LANE CHANGING.)

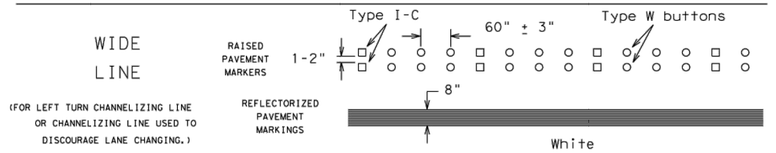


### BROKEN LINES

**CENTER LINE OR LANE LINE**

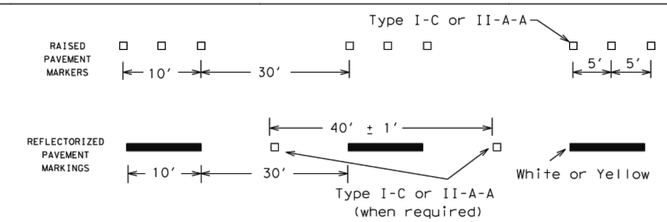


**AUXILIARY OR LANEDROP LINE**

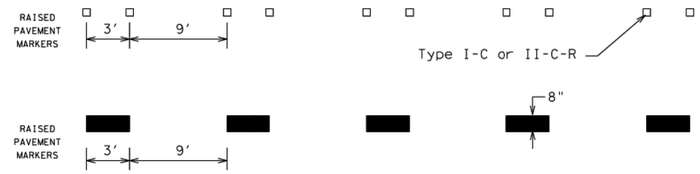


**REMOVABLE MARKINGS WITH RAISED PAVEMENT MARKERS**

If raised pavement markers are used to supplement REMOVABLE markings, the markers shall be applied to the top of the tape at the approximate mid length of tape used for broken lines or at 20 foot spacing for solid lines. This allows an easier removal of raised pavement markers and tape.

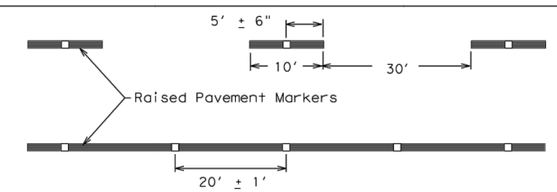


Centerline only - not to be used on edge lines

SHEET 12 OF 12

Raised pavement markers used as standard pavement markings shall be from the approved products list and meet the requirements of Item 672 "RAISED PAVEMENT MARKERS."

Texas Department of Transportation — Traffic Operations Division Standard

# BARRICADE AND CONSTRUCTION PAVEMENT MARKING PATTERNS

## BC(12)-14

| FILE: bc-14.dgn | DN: TxDOT | CK: TxDOT | DW: TxDOT | CK: TxDOT |
|---|---|---|---|---|
| © TxDOT February 1998 | CONT | SECT | JOB | HIGHWAY |
| REVISIONS 1-97 9-07, 2-98 7-13, 11-02 8-14 | DIST | | COUNTY | SHEET NO. 42 |

106

DISCLAIMER:
The use of this standard is governed by the "Texas Engineering Practice Act". No warranty of any kind is made by TxDOT for any purpose whatsoever. TxDOT assumes no responsibility for the conversion of this standard to other formats or for incorrect results or damages resulting from its use.

DATE:
FILE:

DISCLAIMER: The use of this standard is governed by the "Texas Engineering Practice Act". No warranty of any kind is made by TxDOT for any purpose whatsoever. TxDOT assumes no responsibility for the conversion of this standard to other formats or for incorrect results or damages resulting from its use.

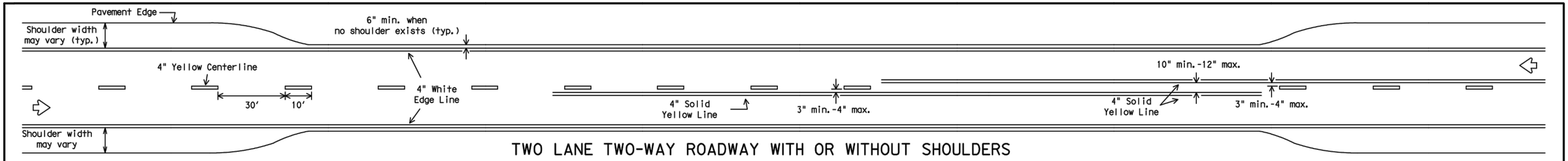


## TWO LANE TWO-WAY ROADWAY WITH OR WITHOUT SHOULDERS

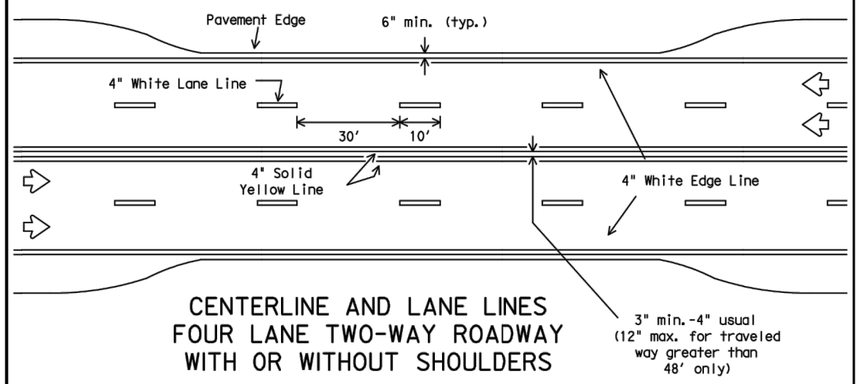


## CENTERLINE AND LANE LINES FOUR LANE TWO-WAY ROADWAY WITH OR WITHOUT SHOULDERS

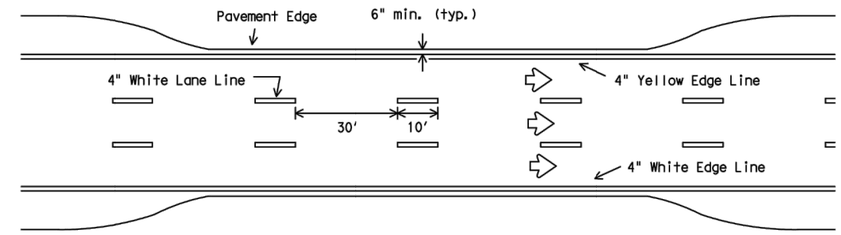


## EDGE LINE AND LANE LINES ONE-WAY ROADWAY WITH OR WITHOUT SHOULDERS

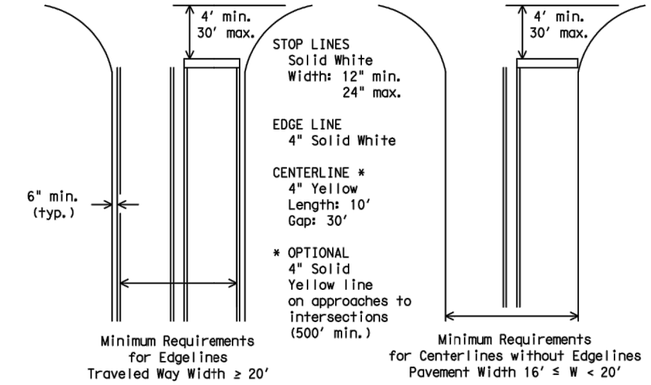


## GUIDE FOR PLACEMENT OF STOP LINES, EDGE LINE & CENTERLINE

Based on Traveled Way and Pavement Widths for Undivided Highways

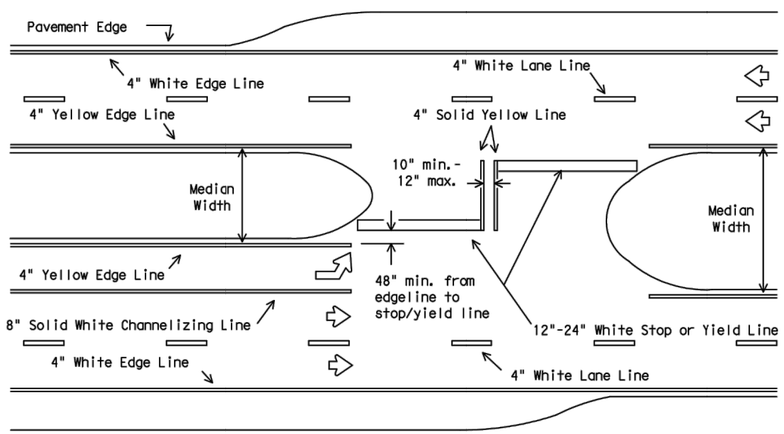


All medians shall be field measured to determine the location of necessary striping. Stop/Yield bars and centerlines shall be placed when the median width is greater than 30 ft. The median width is defined as the area between two roadways of a divided highway measured from edge of traveled way to edge of traveled way. The median excludes turn lanes. The median width might be different between intersections, interchanges and of opposite approaches of the same intersection. The narrow median width will be the controlling width to determine if markings are required.

## FOUR LANE DIVIDED ROADWAY INTERSECTIONS

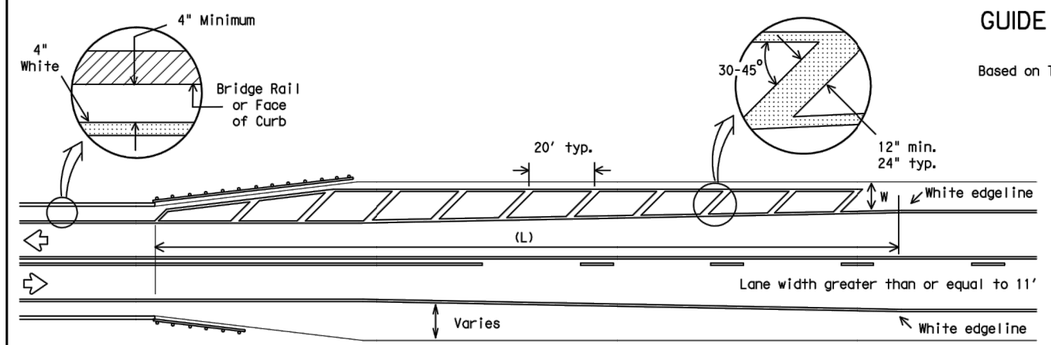


NOTES:

1. No-passing zone on bridge approach is optional but if used, it shall be a minimum 500 feet long.
2. For crosshatching length (L) see Table 1.
3. The width of the offset (W) and the required crosshatching width is the full shoulder width in advance of the bridge.
4. The crosshatching is not required if delineators or barrier reflectors are used along the structure.
5. For guard fence details, refer elsewhere in the plans.

## ROADWAYS WITH REDUCED SHOULDER WIDTHS ACROSS BRIDGE OR CULVERT

### TABLE 1 - TYPICAL LENGTH (L)

| Posted Speed * | Formula |
|---|---|
| ≤ 40 | $L = \frac{WS^2}{60}$ |
| ≥ 45 | L=WS |

* 85th Percentile Speed may be used on roads where traffic speeds normally exceed the posted speed limit. Crosshatching length should be rounded up to nearest 5 foot increment.

L=Length of Crosshatching (FT.) W=Width of Offset (FT.)
S=Posted Speed (MPH)

EXAMPLES:

An 8 foot shoulder in advance of a bridge reduces to 4 feet on a 70 MPH roadway. The length of the crosshatching should be:

$L = 8 \times 70 = 560$ ft.

A 4 foot shoulder in advance of a bridge reduces to 2 feet on a 40 MPH roadway. The length of the crosshatching should be:

$L = 4(40)^2 / 60 = 106.67$ ft. rounded to 110 ft.

### GENERAL NOTES

1. Edgeline striping shall be as shown in the plans or as directed by the Engineer. The edgeline should typically be placed a minimum of 6 inches from the edge of pavement. This distance may vary due to pavement raveling or other conditions. Edgelines are not required in curb and gutter sections of roadways.
2. The traveled way includes only that portion of the roadway used for vehicular travel and not the parking lanes, sidewalks, berms and shoulders. The traveled ways shall be measured from the inside of edgeline to inside of edgeline of a two lane roadway.

| MATERIAL SPECIFICATIONS | |
|---|---|
| PAVEMENT MARKERS (REFLECTORIZED) | DMS-4200 |
| EPOXY AND ADHESIVES | DMS-6100 |
| BITUMINOUS ADHESIVE FOR PAVEMENT MARKERS | DMS-6130 |
| TRAFFIC PAINT | DMS-8200 |
| HOT APPLIED THERMOPLASTIC | DMS-8220 |
| PERMANENT PREFABRICATED PAVEMENT MARKINGS | DMS-8240 |

All pavement marking materials shall meet the required Departmental Material Specifications as specified by the plans.

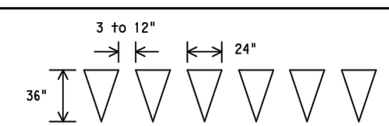


FOR POSTED SPEED ON ROAD BEING MARKED EQUAL TO OR GREATER THAN 45 MPH

FOR POSTED SPEED ON ROAD BEING MARKED EQUAL TO OR LESS THAN 40 MPH

## YIELD LINES

Texas Department of Transportation
Traffic Operations Division

# TYPICAL STANDARD PAVEMENT MARKINGS

PM(1)-12

© TxDOT November 1978

| DN: TXDOT | CK: TXDOT | DW: TXDOT | CK: TXDOT |
|---|---|---|---|
| CONT | SECT | JOB | HIGHWAY |
| DIST | | COUNTY | SHEET NO. |
| | | | 43 |

REVISIONS
8-95 2-12
5-00
8-00
3-03
22A

DATE:
FILE:

DISCLAIMER: The use of this standard is governed by the "Texas Engineering Practice Act". No warranty of any kind is made by TxDOT for any purpose whatsoever. TxDOT assumes no responsibility for the conversion of this standard to other formats or for incorrect results or damages resulting from its use.

# REFLECTIVE RAISED PAVEMENT MARKERS FOR VEHICLE POSITIONING GUIDANCE

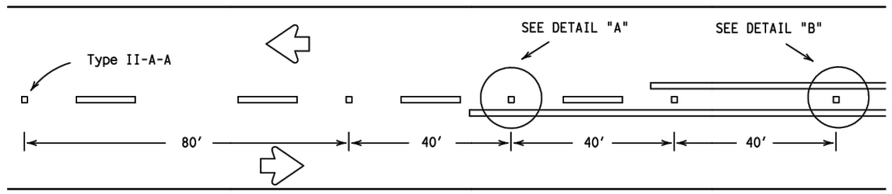


## CENTERLINE FOR ALL TWO LANE ROADWAYS

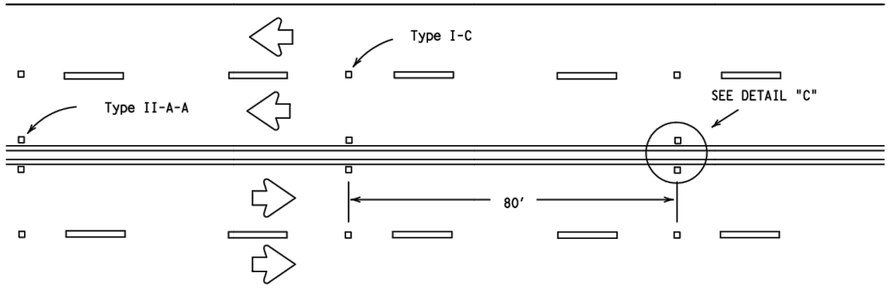


## CENTERLINE & LANE LINES FOR FOUR LANE TWO-WAY HIGHWAYS

Raised pavement marker Type I-C, clear face toward normal traffic, shall be placed on 80-foot centers.

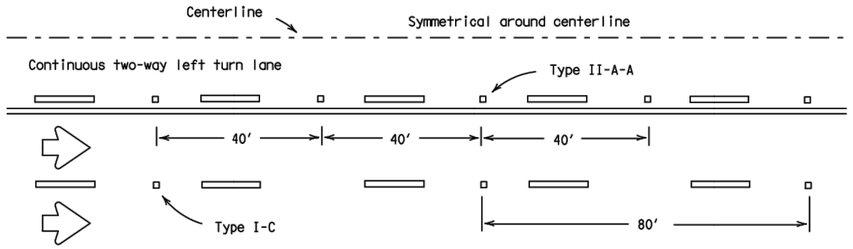


## CENTERLINE AND LANE LINES FOR TWO-WAY LEFT TURN LANE

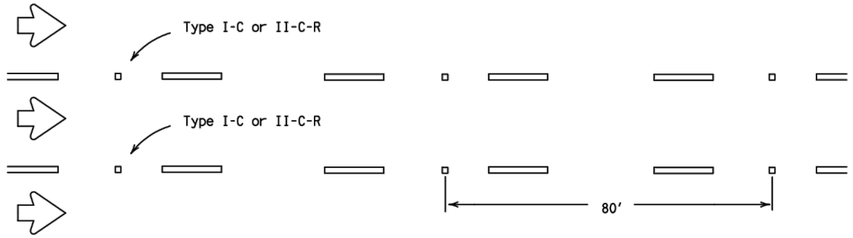


## LANE LINES FOR ONE-WAY ROADWAY (NON-FREEWAY FACILITIES)

Raised pavement markers Type II-C-R shall have clear face toward normal traffic and red face toward wrong-way traffic.

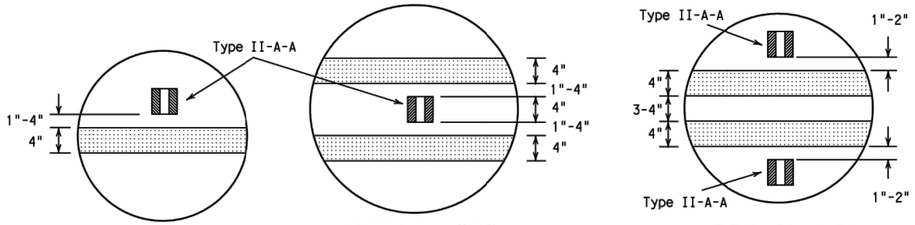


DETAIL "A" DETAIL "B" DETAIL "C"

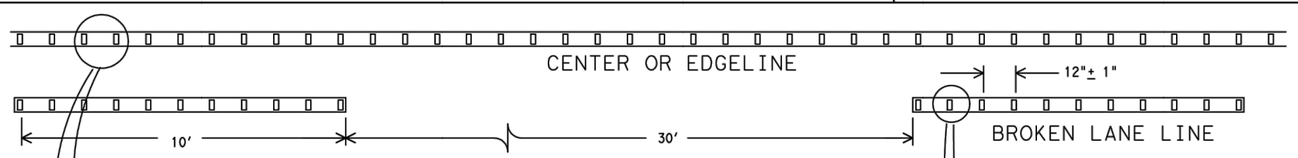


## REFLECTORIZED PROFILE PATTERN DETAIL

USING REFLECTIVE PROFILE PAVEMENT MARKINGS

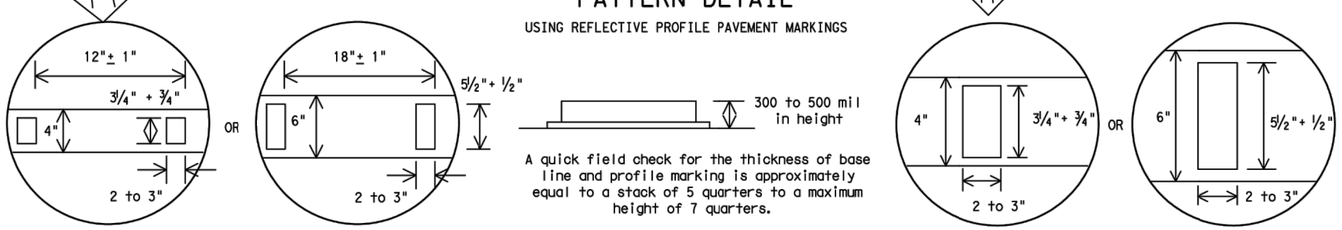


4" EDGE LINE OR CENTERLINE

OPTIONAL 6" EDGE LINE OR CENTERLINE

A quick field check for the thickness of base line and profile marking is approximately equal to a stack of 5 quarters to a maximum height of 7 quarters.

4" LANE LINE

OPTIONAL 6" LANE LINE

**NOTE:**

Profile markings shall not be placed on roadways with a posted speed limit of 45 MPH or less.

## GENERAL NOTES

1. All raised pavement markers placed in broken lines shall be placed in line with and midway between the stripes.
2. On concrete pavements the raised pavement markers should be placed to one side of the longitudinal joints.

| MATERIAL SPECIFICATIONS | |
|---|---|
| PAVEMENT MARKERS (REFLECTORIZED) | DMS-4200 |
| EPOXY AND ADHESIVES | DMS-6100 |
| BITUMINOUS ADHESIVE FOR PAVEMENT MARKERS | DMS-6130 |
| TRAFFIC PAINT | DMS-8200 |
| HOT APPLIED THERMOPLASTIC | DMS-8220 |
| PERMANENT PREFABRICATED PAVEMENT MARKINGS | DMS-8240 |

All pavement marking materials shall meet the required Departmental Material Specifications as specified by the plans.

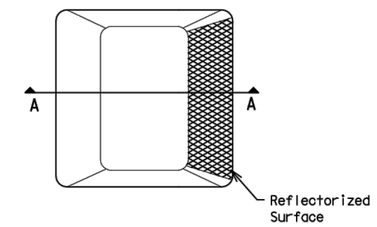


Type I (Top View)

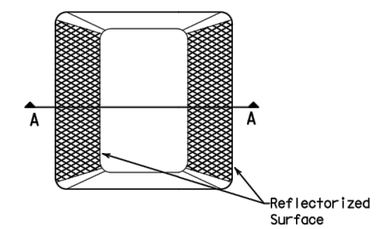


Type II (Top View)

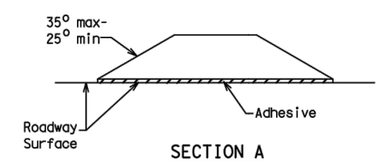


SECTION A

## RAISED PAVEMENT MARKERS

Texas Department of Transportation
Traffic Operations Division

# POSITION GUIDANCE USING RAISED MARKERS
# REFLECTORIZED PROFILE MARKINGS

PM(2)-12

© TxDOT April 1977

| DN: TXDOT | CK: TXDOT | DW: TXDOT | CK: TXDOT |
|---|---|---|---|

REVISIONS
4-92 2-10
5-00 2-12
8-00
2-08

| CONT | SECT | JOB | HIGHWAY |
|---|---|---|---|
| | | | |

| DIST | COUNTY | SHEET NO. |
|---|---|---|
| | | 44 |

DATE:
FILE:

22B

DISCLAIMER: The use of this standard is governed by the "Texas Engineering Practice Act". No warranty of any kind is made by TxDOT for any purpose whatsoever. TxDOT assumes no responsibility for the conversion of this standard to other formats or for incorrect results or damages resulting from its use.

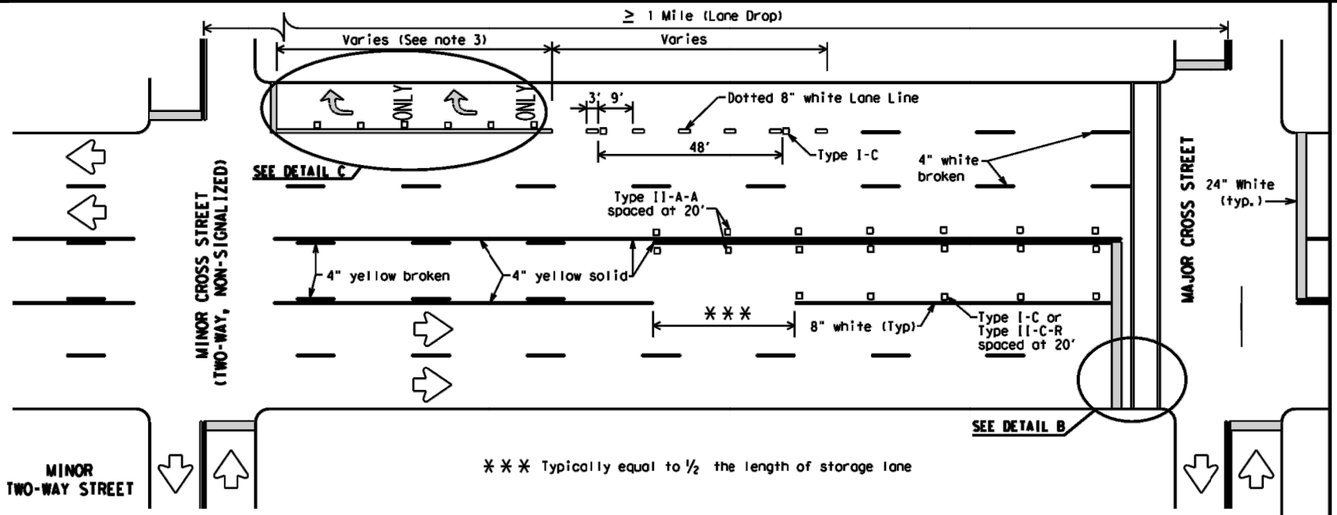


TYPICAL TWLTL AT TWO-WAY CROSS STREET AND RIGHT TURN LANE DROP

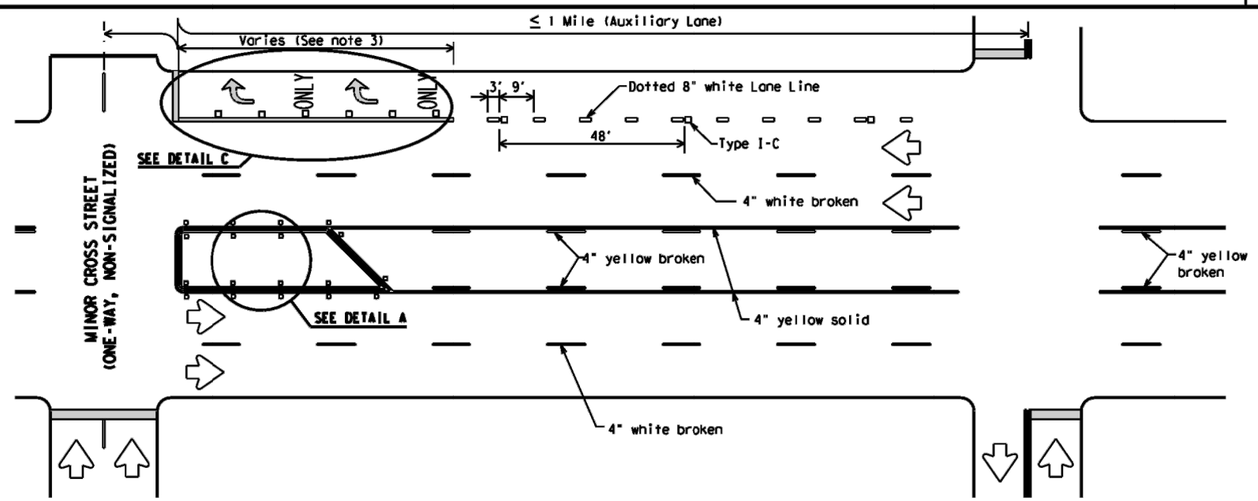


TYPICAL TWLTL AT ONE-WAY STREET AND RIGHT TURN AUXILIARY LANE

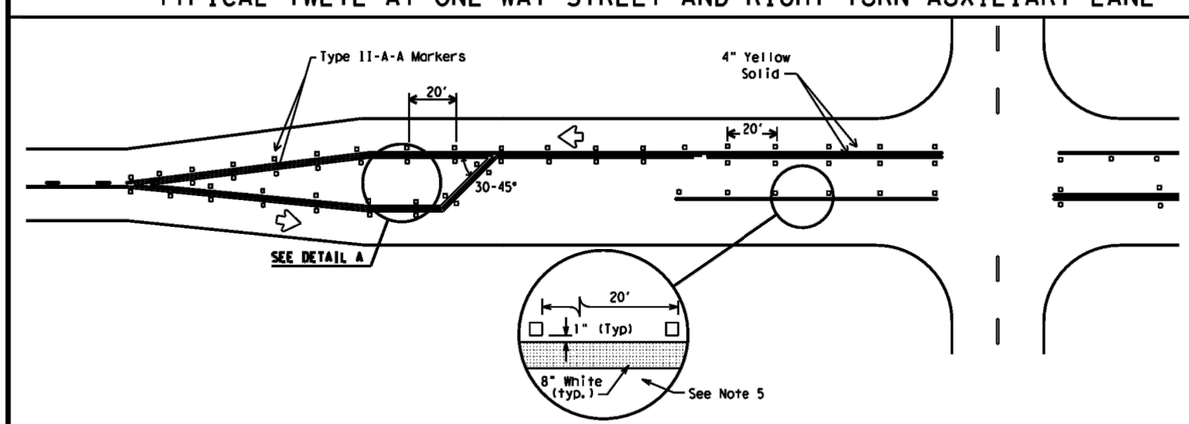


TYPICAL TWO-LANE HIGHWAY INTERSECTION WITH LEFT TURN BAYS

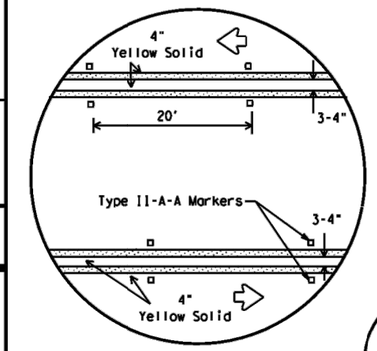


DETAIL A

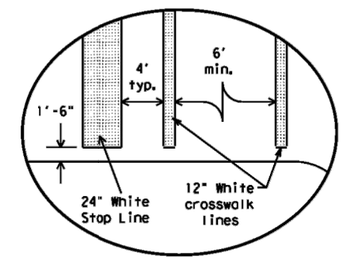


Final placement of Stop Bar and Crosswalk shall be approved by the Engineer in the field.

DETAIL B

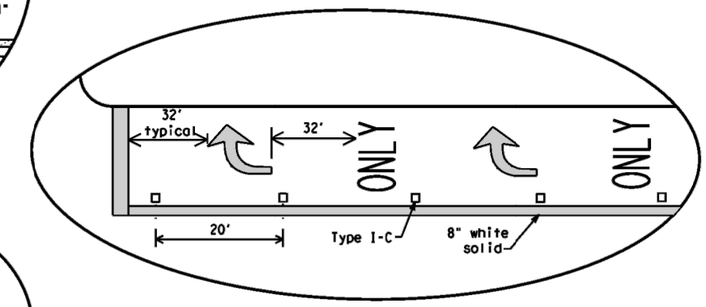


DETAIL C

| MATERIAL SPECIFICATIONS | |
|---|---|
| PAVEMENT MARKERS (REFLECTORIZED) | DMS-4200 |
| EPOXY AND ADHESIVES | DMS-6100 |
| BITUMINOUS ADHESIVE FOR PAVEMENT MARKERS | DMS-6130 |
| TRAFFIC PAINT | DMS-8200 |
| HOT APPLIED THERMOPLASTIC | DMS-8220 |
| PERMANENT PREFABRICATED PAVEMENT MARKINGS | DMS-8240 |

All pavement marking materials shall meet the required Departmental Material Specifications as specified by the plans.

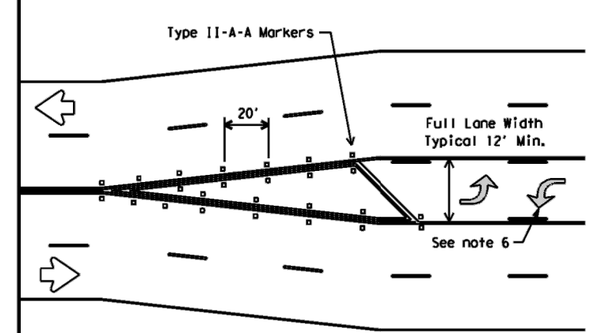


TYPICAL TRANSITION FOR TWLTL AND DIVIDED HIGHWAY

## GENERAL NOTES

1. Refer elsewhere in plans for additional RPM placement and details.
2. Lane use word and arrow markings shall be used where through lanes approaching an intersection become mandatory turn lanes. Lane use word and arrow markings should be used in auxiliary lanes of substantial length. Lane use arrow markings or word and arrow markings may be used in other lanes and turn bays for emphasis. Details for words and arrows as shown in the Standard Highway Sign Designs for Texas.
3. When lane used word and arrow markings are used, two sets of arrows should be used if the length of the bay is greater than 180 feet. When a single lane use arrow or word and arrow marking is used for a short turn lane, it should be located at or near the upstream end of the full-width turn lane.
4. Other crosswalk patterns as shown in the "Texas Manual on Uniform Traffic Control Devices" may be used.
5. Raised pavement marker Type I-C with undivided highways, flush medians and two way left turn lanes. Raised pavement marker Type II-C-R with divided highways and raised medians.
6. A two-way left-turn (TWLT) lane-use arrow pavement marking should be used at or just downstream from the beginning of a two-way left-turn lane within a corridor. Repeating the marking after each intersection or dedicated turn bay is not required unless stated elsewhere in the plans.

Texas Department of Transportation
Traffic Operations Division

# PAVEMENT MARKINGS FOR TWO-WAY LEFT TURN LANES DIVIDED HIGHWAYS AND RURAL LEFT TURN BAYS

PM(3)-12

© TxDOT April 1998

| REVISIONS | DN: TXDOT | CK: TXDOT | DW: TXDOT | CK: TXDOT |
|---|---|---|---|---|
| 5-00 2-12 | CONT | SECT | JOB | HIGHWAY |
| 8-00 | | | | |
| 3-03 | DIST | | COUNTY | SHEET NO. |
| 2-10 | | | | 45 |

22C

DATE:
FILE:

DISCLAIMER:
The use of this standard is governed by the "Texas Engineering Practice Act". No warranty of any kind is made by TxDOT for any purpose whatsoever. TxDOT assumes no responsibility for the conversion of this standard to other formats or for incorrect results or damages resulting from its use.

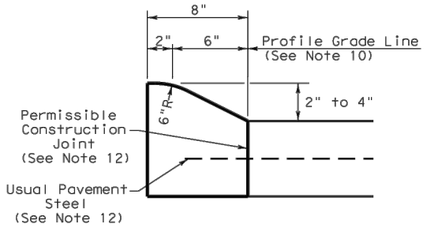


TYPE I CURB (MONOLITHIC)
2" - 4" HEIGHT

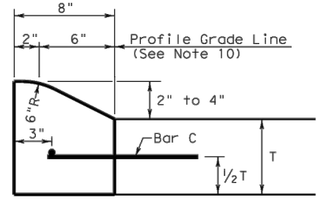


TYPE I CURB
2" - 4" HEIGHT

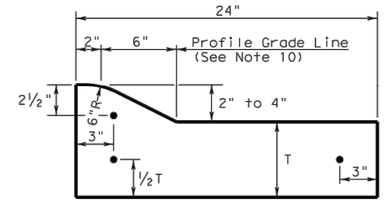


TYPE I CURB AND GUTTER
2" - 4" HEIGHT

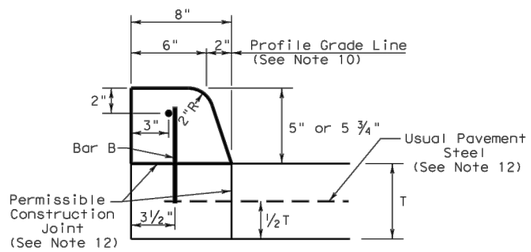


TYPE II CURB (MONOLITHIC)
5" - 5 ¾" HEIGHT

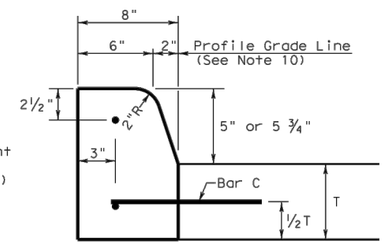


TYPE II CURB
5" - 5 ¾" HEIGHT

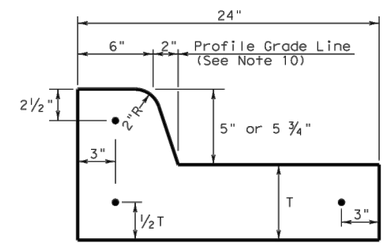


TYPE II CURB AND GUTTER
5" - 5 ¾" HEIGHT

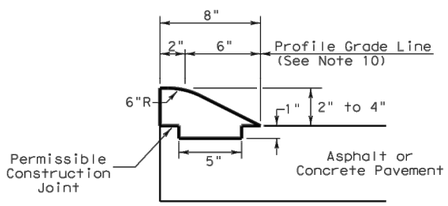


TYPE III CURB (KEYED)
2" - 4" HEIGHT

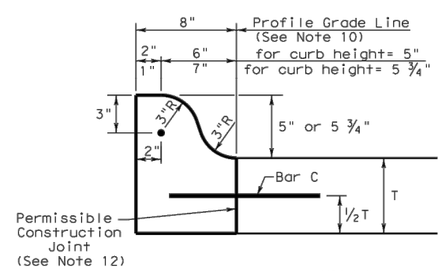


TYPE IIa CURB
5" - 5 ¾" HEIGHT

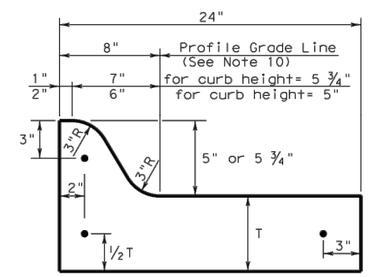


TYPE IIa CURB AND GUTTER
5" - 5 ¾" HEIGHT

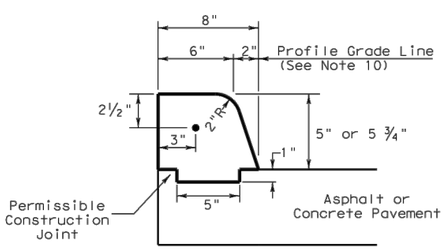


TYPE IV CURB (KEYED)
5" - 5 ¾" HEIGHT

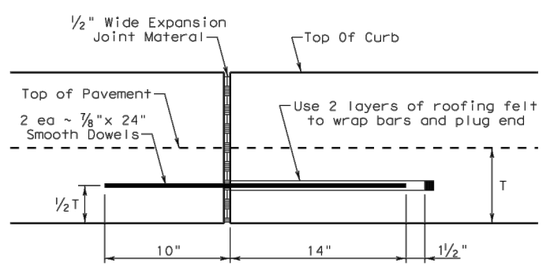


EXPANSION JOINT DETAIL

Curb Transition Note:
Field conditions may require a longer or shorter transition, and shall be shown elsewhere in the plans, or as directed by the Engineer.

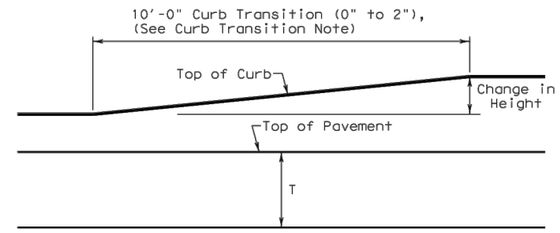


CURB TRANSITION
Note: To be paid for as Highest Curb

## General Notes

1. All materials and construction shall be in accordance with Item 529, "Concrete Curb, Gutter, and Combined Curb and Gutter."
2. Concrete shall be Class A.
3. When reinforcing bars are used, they shall be No.4 unless otherwise shown. The use of synthetic fiber in lieu of steel reinforcing is acceptable, provided the fiber producer is on the Department Producer List (MPL), maintained by TxDOT, Construction Division.
4. Round exposed sharp edges with a rounding tool, to a minimum radius of ¼ inch.
5. All existing curbs and driveways to be removed shall be sawed or removed at existing joints.
6. Where concrete curb is placed on existing concrete pavement, the pavement shall be drilled and the reinforcing bars grouted in place.
7. Expansion and contraction joints shall be constructed to match pavement joints in all curbs and curb and gutter adjacent to jointed concrete pavement. Where placement of curb or curb and gutter is not adjacent to concrete pavement, expansion joints shall be provided at structures, curb returns at streets, and at locations directed by The Engineer.
8. Vertical and horizontal dowel bars and transverse reinforcing bars shall be placed at four feet C~C.
9. Dimension 'T' shown is the thickness of concrete pavement. When curb is installed adjacent to flexible pavement dimension 'T' is 8" maximum.
10. Usual profile grade line. Refer to typical sections and plan-profile sheets for exact locations.
11. One-half inch expansion joint material shall be provided where curb or curb and gutter is adjacent to sidewalk or riprap.
12. When vertical permissible construction joints are used, resulting in a longitudinal construction joint in the pavement, the longitudinal pavement steel shall be placed in accordance with pavement details shown elsewhere in the plans for longitudinal construction joints. Reinforcing steel for curb section shall then conform to that required for concrete curb.

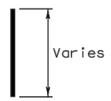


BAR B

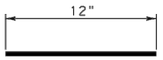


BAR C

Texas Department of Transportation — Design Division Standard

# CONCRETE CURB AND CURB AND GUTTER

## CCCG-12

| | | | | | |
|---|---|---|---|---|---|
| FILE: cccg12 | DN: TxDOT | CK: AM | DW: VP | CK: | |
| ©TxDOT 1995 | CONT | SECT | JOB | HIGHWAY | |
| REVISIONS | | | | | |
| | DIST | COUNTY | | SHEET NO. | |
| | WACO | MCLENNAN | | 46 | |

DATE:
FILE:

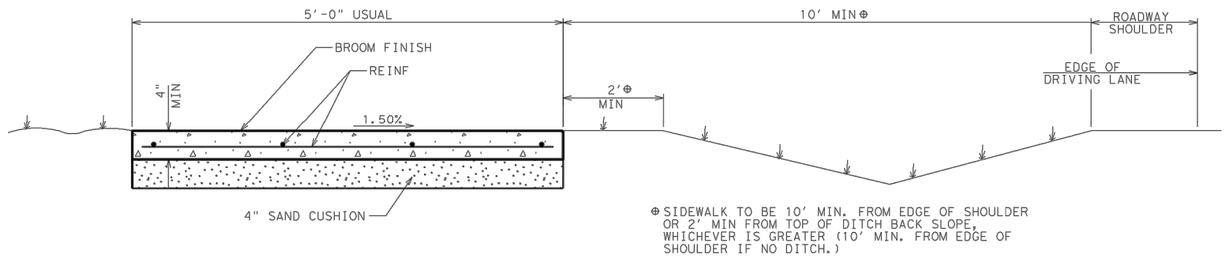


CONCRETE SIDEWALK
(ROADWAY W/O CURB)

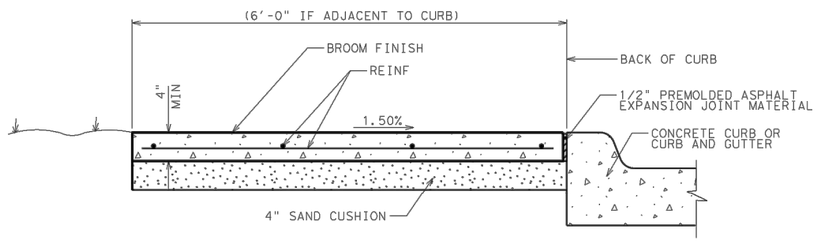


CONCRETE SIDEWALK
(ADJACENT TO CURB)

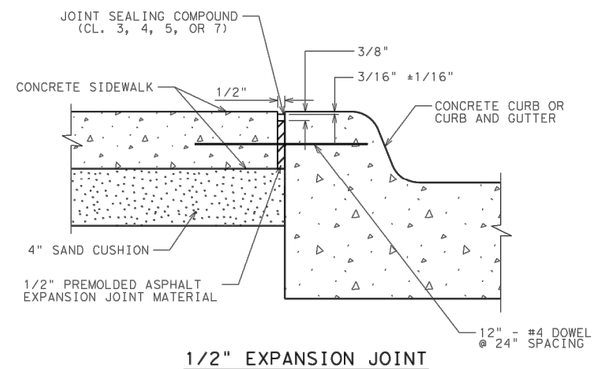


1/2" EXPANSION JOINT
(SIDEWALK ADJACENT TO CURB)

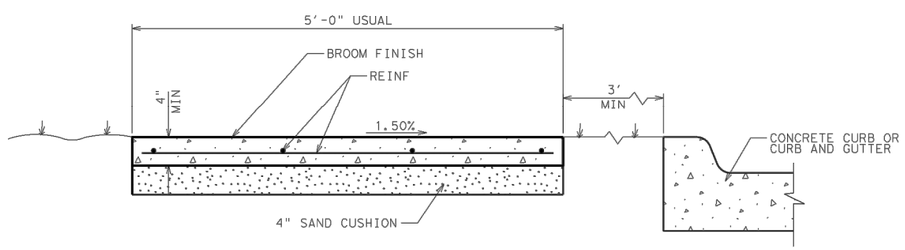


CONCRETE SIDEWALK
(OFFSET FROM CURB)

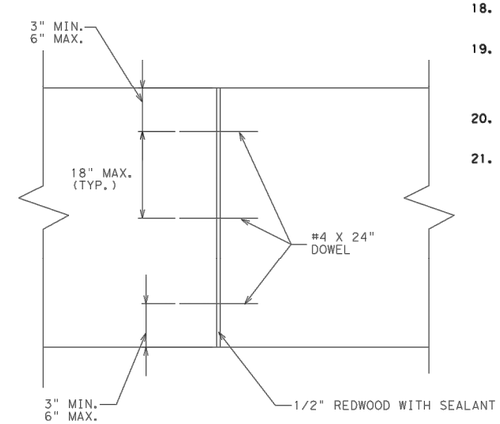


TRANSVERSE EXPANSION JOINT

## GENERAL NOTES

1. SEE PLAN SHEETS FOR LOCATIONS OF SIDEWALKS AND RETAINING WALLS.
2. SEE TXDOT PED STANDARD FOR ADDITIONAL PEDESTRIAN ELEMENT CRITERIA.
3. CONSTRUCT SIDEWALK IN ACCORDANCE WITH ITEM #531.
4. UNLESS SPECIFIED ELSEWHERE IN THE PLANS TO BE ONLY REINFORCING BARS, THE REINFORCEMENT MAY BE COMPOSED OF REINFORCING BARS, WELDED WIRE REINFORCEMENT (WWR) OR ANY SUITABLE COMBINATION OF BOTH TYPES. UNLESS SPECIFIED ELSEWHERE IN THE PLANS, REINFORCING BARS SHALL BE #3 @ 18" C-C, GRADE 40 WITH LAP SPLICES 40 BAR DIAMETERS LONG. WELDED WIRE REINFORCEMENT (WWR) SHALL BE 6x6-#6 WIRE MESH.
5. ALL DOWELS SHALL BE ADEQUATELY SUPPORTED TO RETAIN PROPER ALIGNMENT.
6. REBAR CHAIRS SHALL BE PLACED ON 4" MAXIMUM SPACING EACH WAY.
7. DRILL & DOWEL INTO EXISTING CURB & GUTTER #4 BARS, 12" @ 24" SPACING.
8. CURING MEMBRANE SHALL BE APPLIED ACCORDING TO MANUFACTURER'S RECOMMENDATIONS.
9. PLACE EXPANSION JOINTS EVERY 40'.
10. EXPANSION JOINTS SHALL ALIGN WITH CURB AND GUTTER JOINTS.
11. PLACE CONTRACTION OR DUMMY JOINTS AT A SPACING EQUAL TO THE WIDTH OF THE WALK.
12. TYPICAL SIDEWALKS SHALL BE FORMED AND POURED AT A MAXIMUM CROSS-SLOPE OF 1.5%. ANY CROSS-SLOPES EXCEEDING 2% WILL NOT BE ACCEPTED.
13. LOGITUDINAL SLOPE OF SIDEWALKS SHALL NOT EXCEED 5% EXCEPT IN CASES WHERE THE ADJACENT ROADWAY SLOPE EXCEEDS 5%. IF ROADWAY SLOPE EXCEEDS 5%, LONGITUDINAL SLOPE OF SIDEWALKS MAY MATCH THAT OF ROADWAY.
14. CHANGES IN LEVEL GREATER THAN 1/4 INCH ARE NOT PERMITTED ALONG SIDEWALKS.
15. NEW SIDEWALK SHALL BE CONNECTED TO ALL EXISTING ADJACENT WALKS AND STEPS.
16. MINIMUM COVER OVER REINF SHOULD BE 2". MAXIMUM LATERAL COVER OVER REINF IS 3".
17. WHERE SIDEWALK OR WHEELCHAIR RAMP ADJOINS BACK OF CURB, INLET, POLE OR ANY STRUCTURE, APPROVED EXPANSION MATERIAL SHALL BE USED.
18. IF SIDEWALK WIDTH IS LESS THAN 5', PROVIDE 5' X 5' PASSING AREAS AT INTERVALS NOT TO EXCEED 200' SPACING.
19. WHERE SIDEWALK WITH RETAINING WALL IS SPECIFIED, RETAINING WALL WILL BE SUBSIDIARY TO THE ITEM, "CONCRETE SIDEWALK (SPECIAL)(RETAINING WALL)", WITH LIMITS OF PAY AS SHOWN HEREON.
20. SIDEWALK EXPANSION JOINTS SHOULD EXTEND THROUGH ADJACENT CONCRETE STRUCTURES SUCH AS CURB AND CURB AND GUTTERS.
21. BRICK SAND UNDER SIDEWALK WILL BE UNACCEPTABLE.

© Texas Department of Transportation 2014, all rights reserved

WACO DISTRICT STANDARD

CONCRETE SIDEWALK DETAILS

SHEET 1 OF 3

| FED.RD. DIV.NO. | FEDERAL AID PROJECT NO. | | SHEET NO. |
|---|---|---|---|
| 6 | X | | 47 |
| STATE | DIST. | COUNTY | |
| TEXAS | WACO | MCLENNAN | |
| CONT. | SECT. | JOB | HIGHWAY NO. |
| | | | X |

# CONCRETE SIDEWALK DETAILS

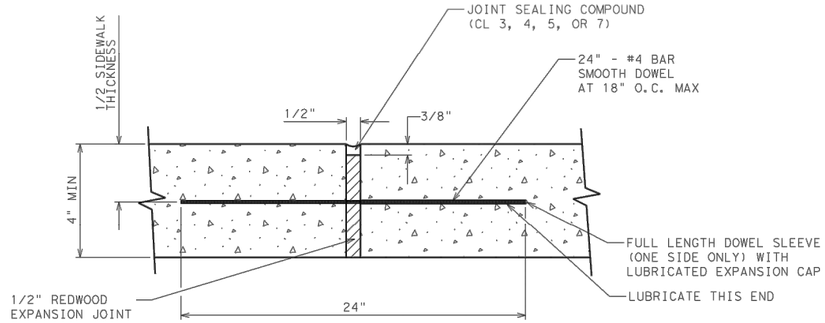


EXPANSION JOINT
(SIDEWALK)

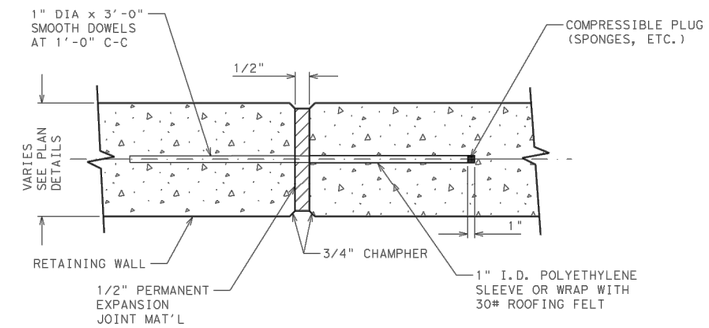


EXPANSION JOINT
(RETAINING WALL)

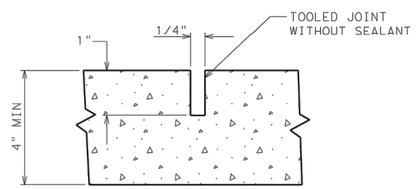


CONTRACTION JOINT

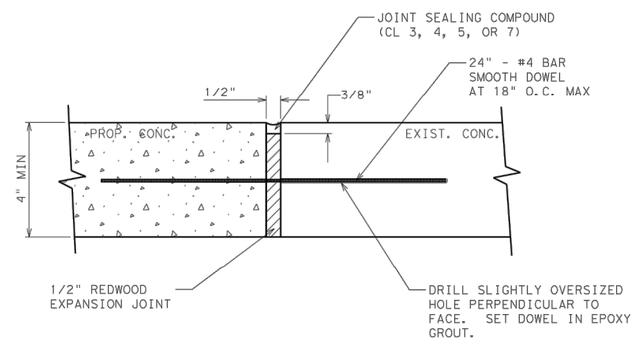


DOWEL TO EXISTING DETAIL

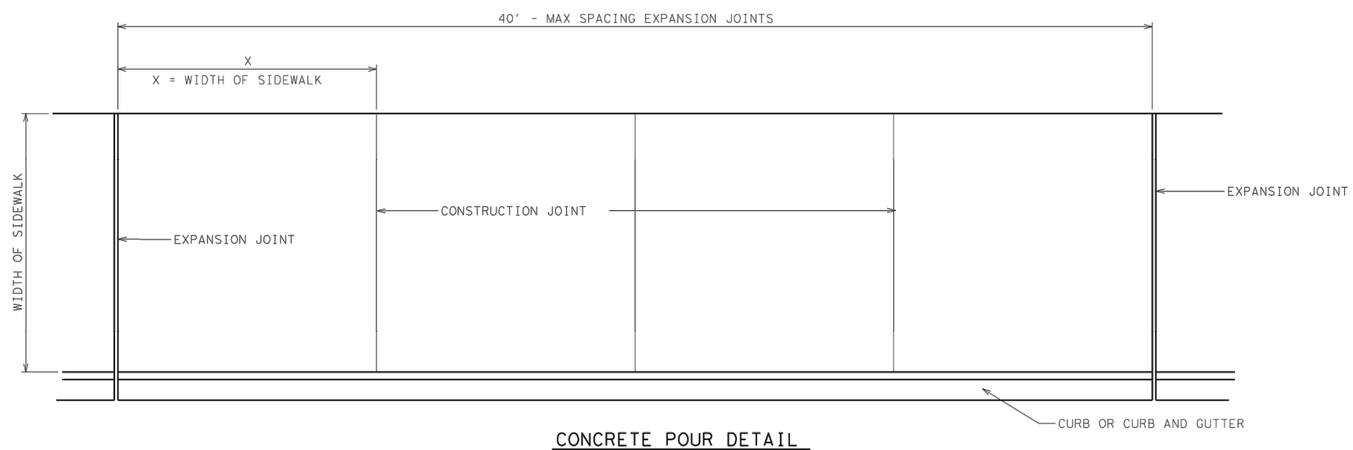


CONCRETE POUR DETAIL

© Texas Department of Transportation 2014, all rights reserved

WACO DISTRICT STANDARD

# CONCRETE SIDEWALK DETAILS

SHEET 2 OF 3

| FED. RD. DIV. NO. | FEDERAL AID PROJECT NO. | | SHEET NO. |
|---|---|---|---|
| 6 | X | | 48 |
| STATE | DIST. | COUNTY | |
| TEXAS | WACO | MCLENNAN | |
| CONT. | SECT. | JOB | HIGHWAY NO. |
| | | | X |

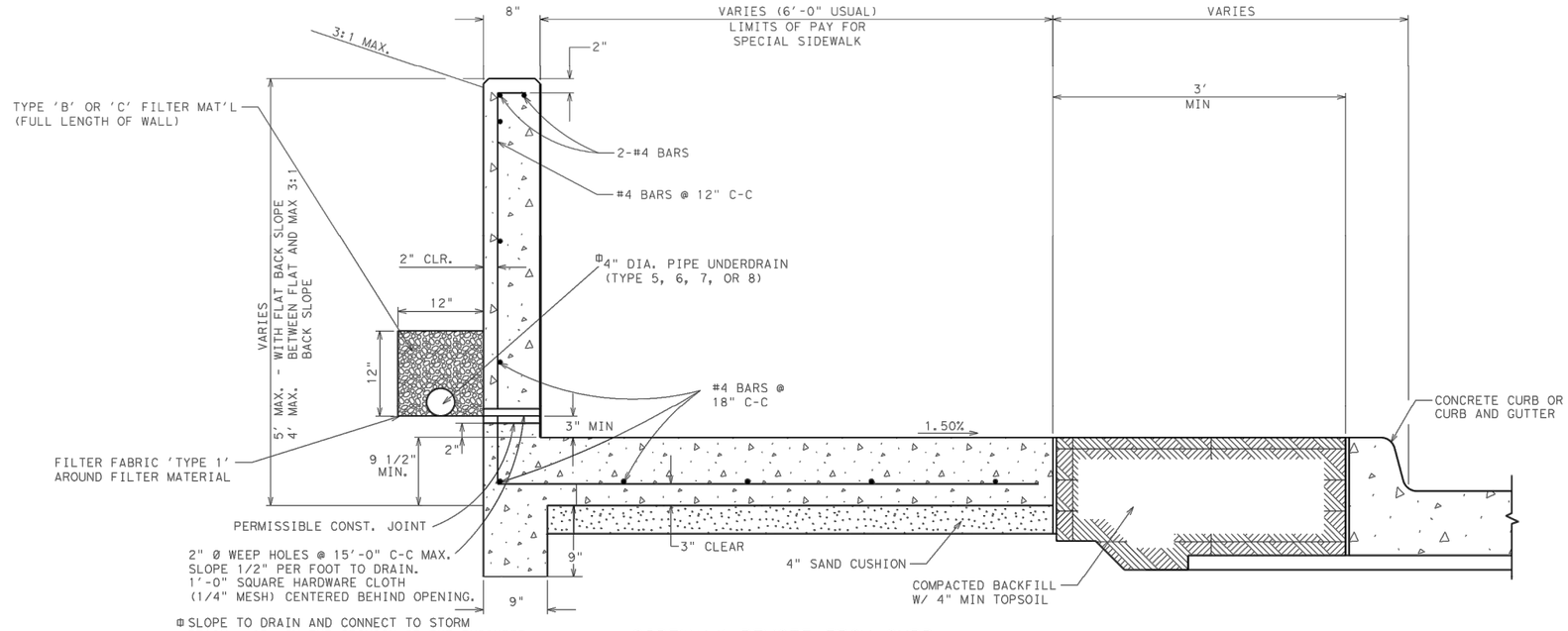


SIDEWALK REMOTE FROM CURB

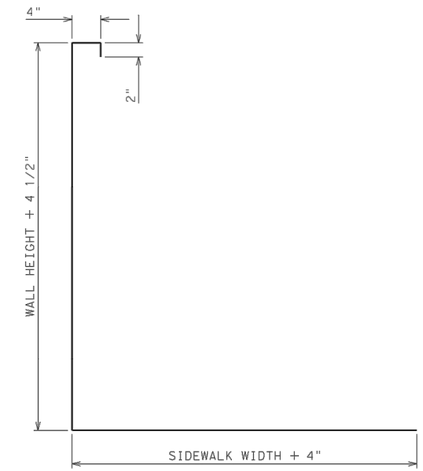


REINFORCING STEEL DETAIL

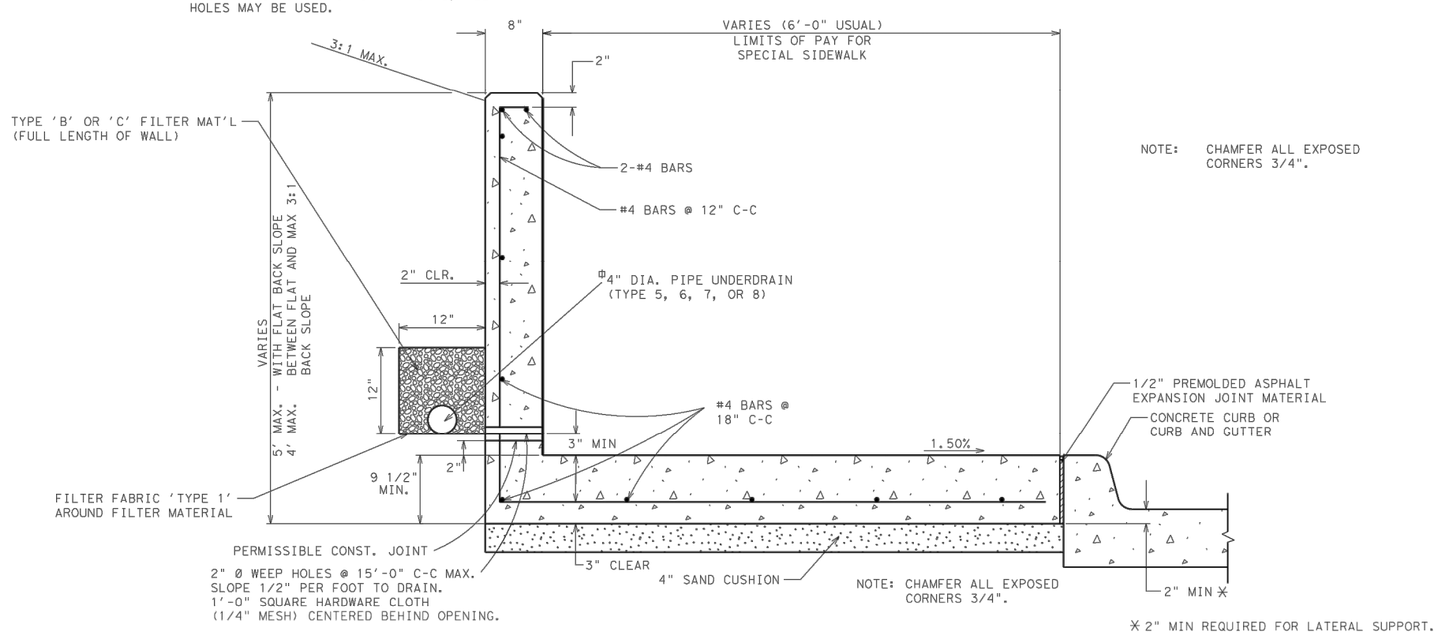


NOTE: CHAMFER ALL EXPOSED CORNERS 3/4".

NOTE: CHAMFER ALL EXPOSED CORNERS 3/4".

✳ 2" MIN REQUIRED FOR LATERAL SUPPORT.

SIDEWALK ADJACENT TO CURB

# SPECIAL CONCRETE SIDEWALK W/RETAINING WALL

© Texas Department of Transportation 2014, all rights reserved

WACO DISTRICT STANDARD

## CONCRETE SIDEWALK DETAILS

SHEET 3 OF 3

| FED. RD. DIV. NO. | FEDERAL AID PROJECT NO. | | SHEET NO. |
|---|---|---|---|
| 6 | STP 2016 (106) TP ETC. | | 49 |
| STATE | DIST. | COUNTY | |
| TEXAS | WACO | MCLENNAN | |
| CONT. | SECT. | JOB | HIGHWAY NO. |
| | | | X |

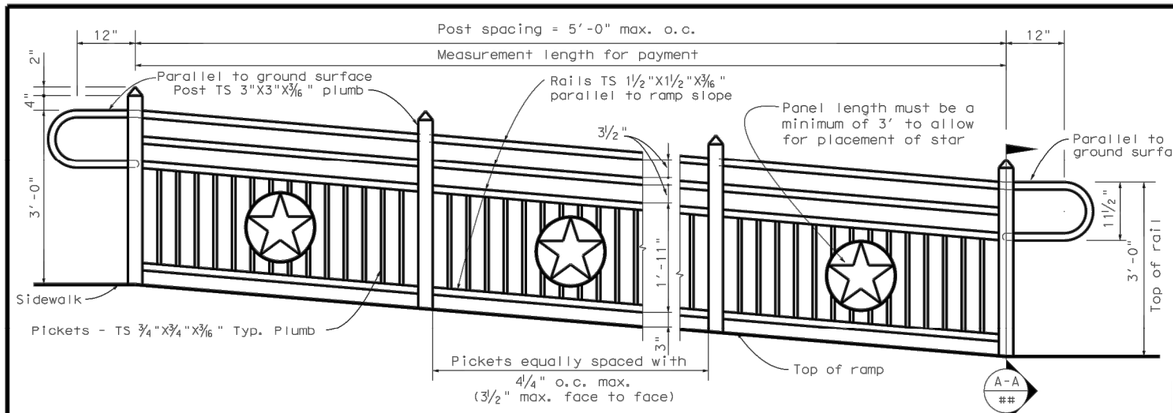


## TYPE A HANDRAIL ON RAMP

( Used in all cases unless the use will create a site obstruction)

✳ Type D Handrai eliminates the grasping bar and rail returns. All other elements remain he same. Type D Handrail shall be used only for a barrier.

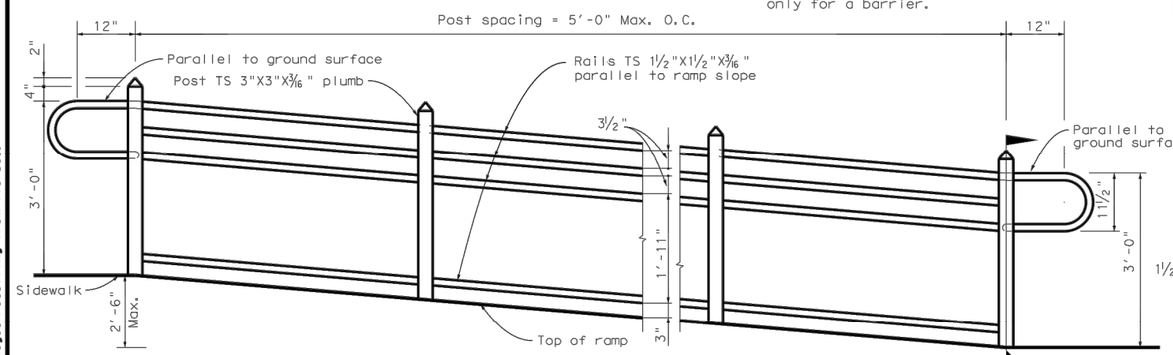


## TYPE B HANDRAIL ON RAMP

(Used where ramp or sidewalk is less than 2'-6" above adjacent surface and where Type A rail creates a sight obstruction.)

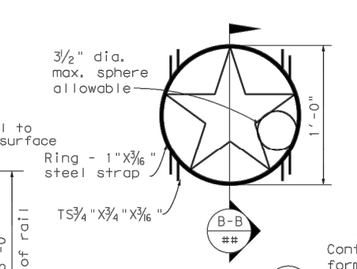


## STAR DETAIL

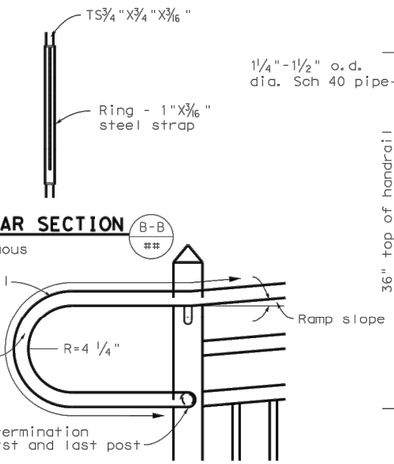


## STAR SECTION

## RAIL RETURN DETAIL ✳

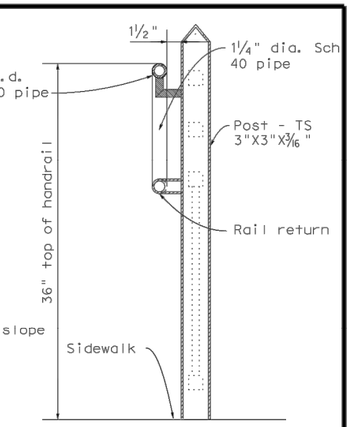


## POST SECTION

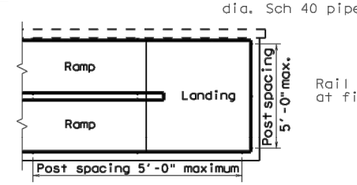


PLAN

## MULTI-LEVEL RAMP

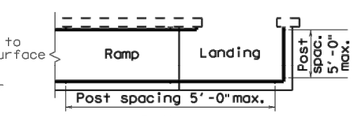


PLAN

## SINGLE-LEVEL RAMP

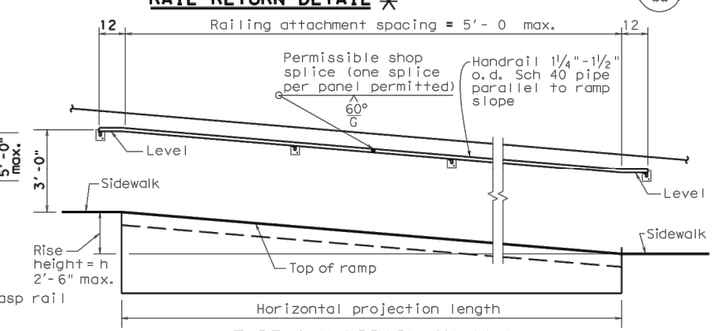


## TYPE C HANDRAIL ON WALL

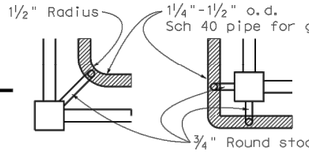


INSIDE CORNER

OUTSIDE CORNER

## HANDRAIL ATTACHMENT DETAIL

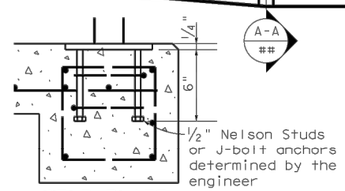


## WELD PLATE ANCHOR

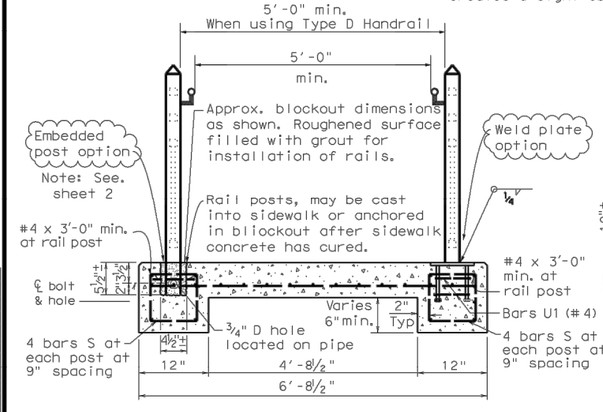


## ELEVATION

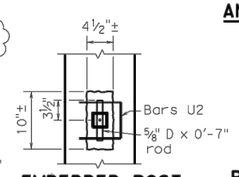


## EMBEDDED POST ANCHOR

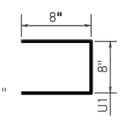


## BARS U (#4)

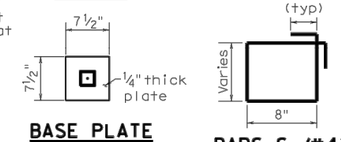


## BASE PLATE DETAILS

## BARS S (#4)

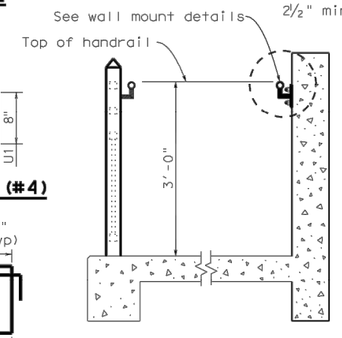


## COMBINATION OF HANDRAIL ON WALL AND RAMP

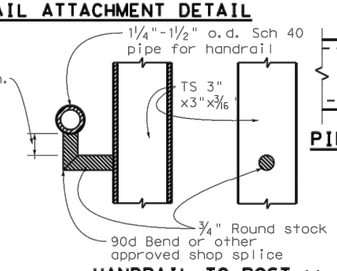


## HANDRAIL TO POST ✳ MOUNT DETAILS

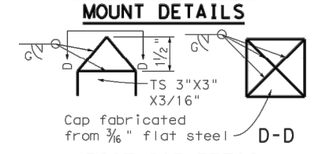


## POST CAP DETAIL

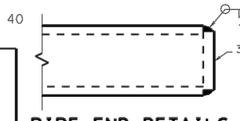


## PIPE END DETAILS

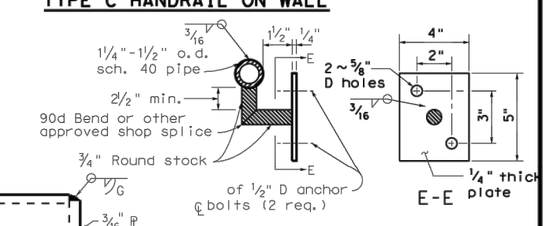


## WALL MOUNT DETAILS

R = Radius
D = Diameter

Added type D handrail 02-28-12

Texas Department of Transportation

# ✳ WACO DISTRICT HANDRAIL DETAIL

SHEET 1 OF 2

| FILE: | DN: | CK: | DW: | CK: | NEG: |
|---|---|---|---|---|---|
| ©TxDOT 2006 | DIST | FED REG | FEDERAL AID PROJECT • | | SHEET |
| REVISIONS | WACO | 6 | | | 50 |
| | COUNTY | | CONTROL | SECT | JOB | HIGHWAY |
| | MCLENNAN | | | | |

DISCLAIMER:
The use of this standard is governed by the "Texas Engineering Practice Act". No warranty of any kind is made by TxDOT for any purpose whatsoever. TxDOT assumes no responsibility for the conversion of this standard to other formats or for incorrect results or damages resulting from its use.

LEVELS DISPLAYED

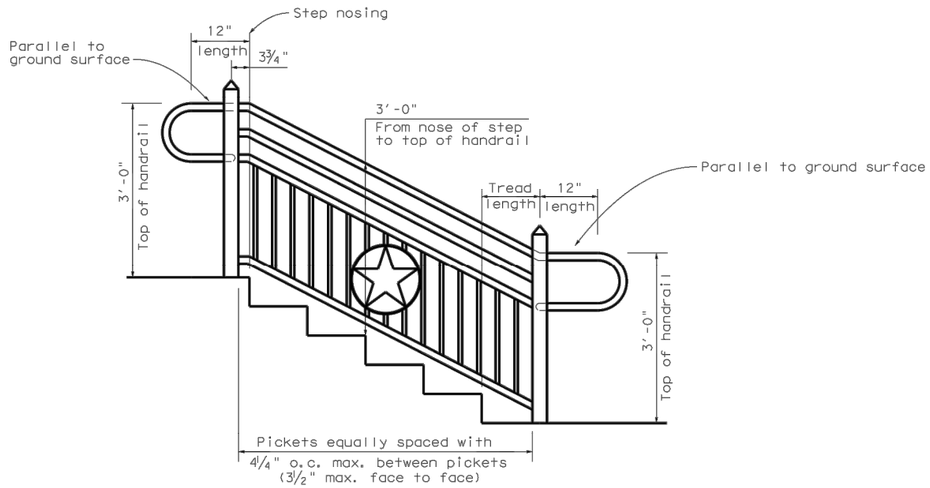


## GENERAL NOTES

1. The designer should carefully evaluate the site conditions to determine the necessity and extent of the warrant for handrail.
2. The designer should use careful judgment in specifying the type of handrail to be used.
3. Type 'A' handrail is to be used in all cases, unless its use will create a site obstruction, or it is adjacent to the wall of a building or a retaining wall.
4. Type handrail is to be used in cases where the Type 'A' handrail creates a site obstruction. If Type 'B' handrail is used, the ramp and/or sidewalk height above any adjacent surface shall not be more than 2'-6". Type 'B' handrail can be used adjacent to Concrete Block Retaining Walls ("Keystone ®" or similar type wall construction).
5. △2 Type D handrail is to be used only as a barrier.
6. Where handrail is placed adjacent to the wall of a building, Type 'B' handrail is to be used unless there is an agreement with the building owner to use Type 'A' handrail.
7. Handrail 'C' is to be used on concrete retaining walls, provided the retaining wall is TxDOT property. Otherwise, use handrail 'B', or for screening purposes, use handrail 'A'.
8. If handrail is placed on a retaining wall or the wall of a building, and the wall surface is irregular, ensure there is a minimum of 1½" clearance between the wall surface and the handrail.
9. If handrail is used on a ramp for its intended purpose of accessibility assistance, it must be placed on both sides of the ramp. If handrail is used only as a drop off or fall barrier to pedestrian traffic, it may be used as necessary on only one side of a ramp or sidewalk.
10. Design conforms to Texas Department of Licensing and Regulation (TDLR) Texas Accessibility Standards (TAS), Americans with Disabilities Act Accessibility guidelines (ADAAG), and AASHTO Specifications. Handrail must be installed in compliance with these standards and guidelines.
11. Handrails shall not rotate within their fittings.
12. Handrails shall be at a consistent height above ramp surface.
13. See Sidewalk and Ramp details and/or plan drawings for ramp slopes, dimensions, configurations, and reinforcing steel. This standard shows additional reinforcing steel required for handrail.
14. Posts are to be attached to the concrete utilizing weld plates or embedded posts. Bolt down anchor plates are not acceptable. Weld plates are specifically to be used where there is a high possibility the handrail can be damaged by vehicles.
15. Measurement for payment will be the dimension between the centerline of the outside posts. The dimension of the rail return will not be included in the measurement for payment, but will be considered subsidiary to Item 450.
16. Material for posts and handrails shall be ASTM A53 Gr B, or A501. Weld plates shall be A36.
17. If the rail return creates a hazard or obstruction, it may be turned outward 90° to the direction of the handrail.
18. △1 All components shall be painted in strict accordance to TxDOT specification Item 446, Cleaning and Painting Steel, System II, Class A Blast Cleaning. The paint shall be acrylic latex. Primer and paint shall be from the same manufacturer. The surface preparation shall meet the requirements of SSPC-SP 10. The paint color shall be selected by the TxDOT District Landscape Architect. A list of pre-approved structural steel paint manufacturers can be found on TxDOT's website.
18. All welds shall be 3/16" x 3/16" fillet full perimeter on all connections, unless otherwise shown on the plans.
19. Anchor bolts for handrail attached to a retaining wall shall be placed using an adhesive doweling system approved by the engineer. Anchor bolts shall have an allowable capacity of 2400 lbs in tension and 2300 lbs in shear. Installation of the anchor bolts, including hole depth and diameter, shall be in accordance with the manufacturer's recommendation. If required by the engineer, 3 of the first 10 anchors, and 5% of the remaining anchors shall be tested to 70% of the minimum yield. The contractor shall provide a suitable ram, pump, pressure gauge, and reaction system.
20. Anchor bolts for the attachment of handrail to concrete retaining wall shall conform to ASTM A36 or approved equal. Nuts for anchor bolts shall conform to ASTM A563 Gr A or better heavy hex. Threads for anchor bolts and nuts shall be rolled or cut threads of unified national coarse (UNC) thread series. Bolts and nuts shall have class 2A and 2B fit tolerances. Washers shall be included with each bolt.
21. Exposed edges of handrail and posts shall be rounded or chamfered to approximately 1/8" by grinding. Finished handrail system shall have no burrs.
22. Weld plates, other anchoring systems, rail returns, post caps, star emblem, and painting are to be included in the unit bid price for railing.
23. Erection drawings showing panel lengths, splice locations, rail post spacing, star emblem placement, and anchoring selection shall be submitted to the engineer for approval prior to installation of any handrail component. Any handrail component installation prior to approval of erection drawings will be subject to rejection.

△2 - CHANGED ON 2/28/2012
△1 - CHANGED ON 4/7/2006

Texas Department of Transportation

# WACO DISTRICT HANDRAIL DETAIL

SHEET 2 OF 2

| FILE: | DN: | CK: | DW: | CK: | NEG: | |
|---|---|---|---|---|---|---|
| © TxDOT 2006 | DIST | FED REG | FEDERAL AID PROJECT ● | | | SHEET |
| REVISIONS 4/7/2006 - NOTE #17 CHANGED (BRL) | WACO | 6 | | | | 51 |
| | COUNTY | | CONTROL | SECT | JOB | HIGHWAY |
| | MCLENNAN | | | | | |

DISCLAIMER:
The use of this standard is governed by the "Texas Engineering Practice Act". No warranty of any kind is made by TxDOT for any purpose whatsoever. TxDOT assumes no responsibility for the conversion of this standard to other formats or for incorrect results or damages resulting from its use.

LEVELS DISPLAYED
1 3 4 5 6 7 8 9 10 11 12 13 14 15 16
17 18 19 20 22 23 24 26 27 28 29 30 31 32
33 34 35 36 37 38 39 40 42 43 44 45 46 47 48
50 51 52 53 54 55 56 57 58 59 60 61 62 63

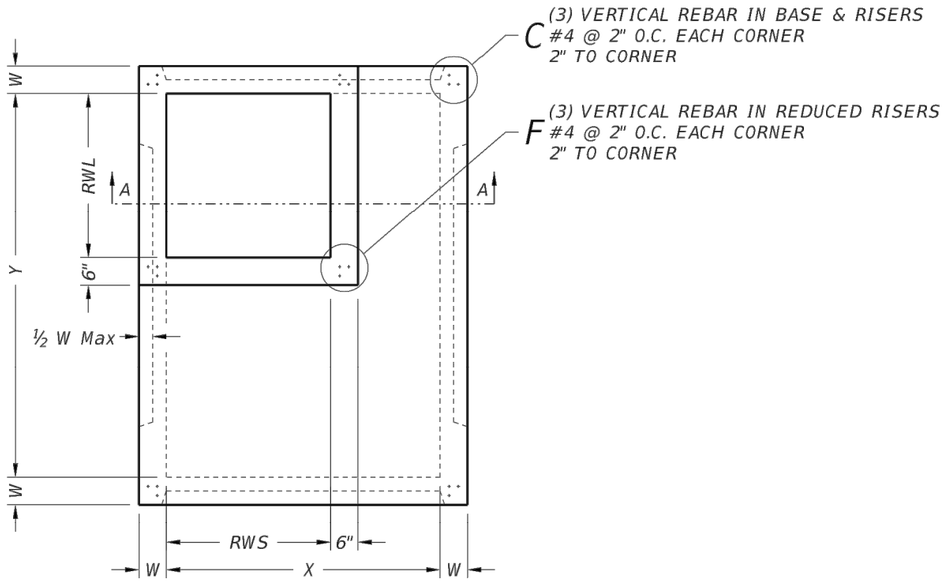


## PLAN VIEW "A"

SQUARE REDUCED RISER OPTION

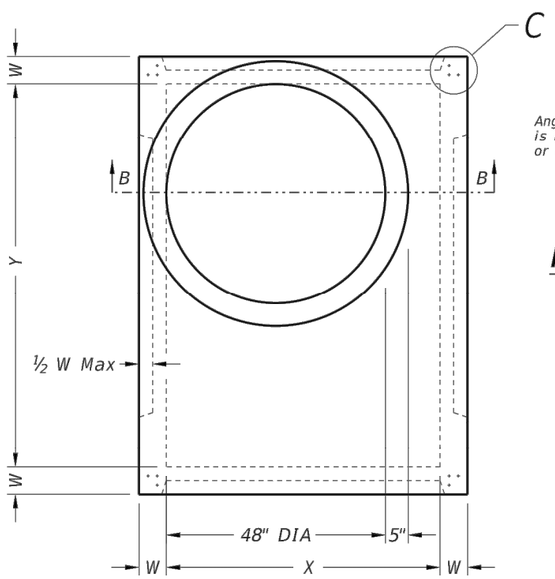


## PLAN VIEW "B"

ROUND REDUCED RISER OPTION

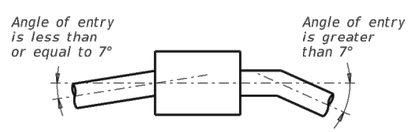


## PIPE CONNECTION DETAIL

Connect pipes within 7° of normal to PB wall.
If necessary, use pipe elbow or curved
approach alignment to stay within this limit.

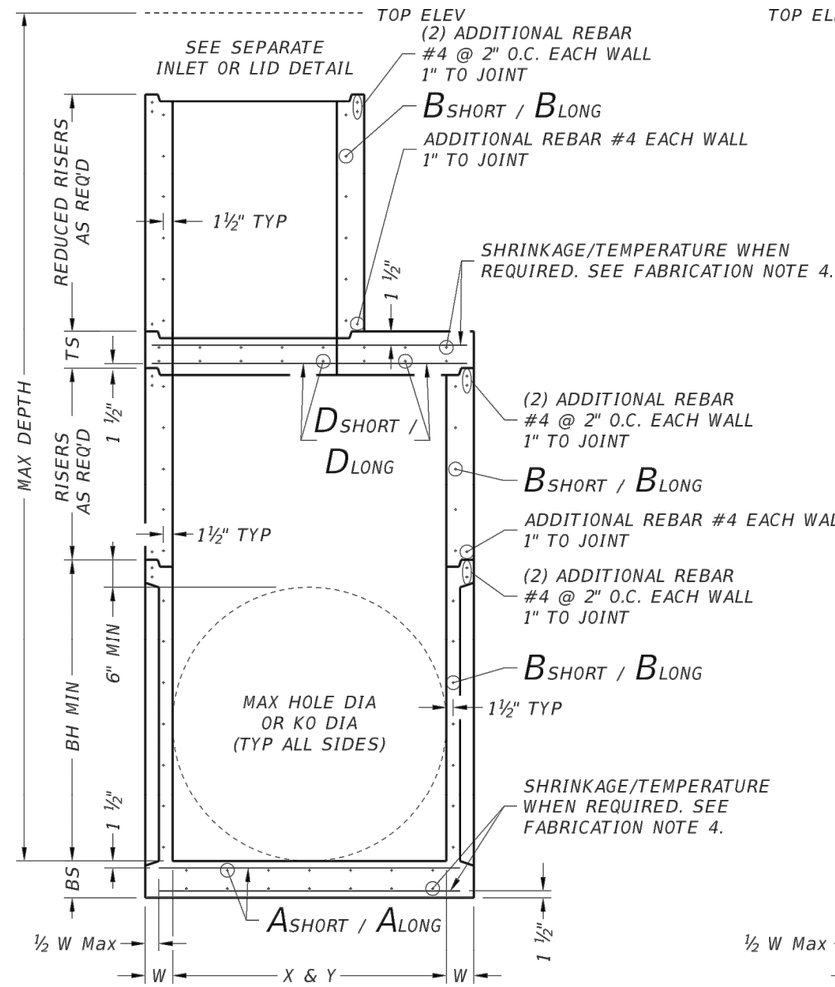


## SECTION A-A

SQUARE REDUCED RISER OPTION

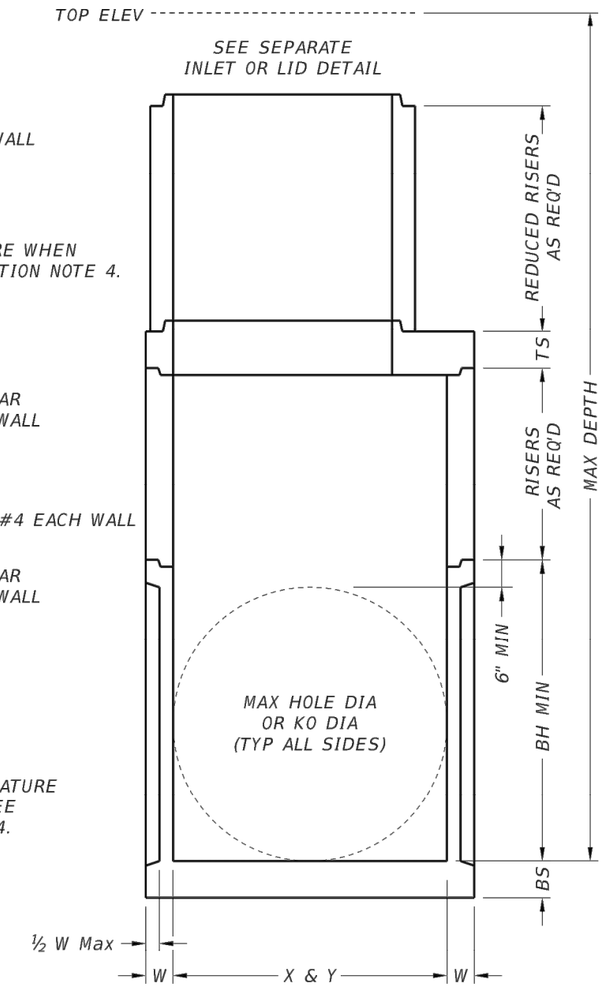


## SECTION B-B

ROUND REDUCED RISER OPTION

### FABRICATION NOTES:

1. Provide Class "H" concrete in accordance with Item 421 and having a minimum compressive strength of 5,000 psi.
2. Provide Grade 60 reinforcing steel or equivalent area of WWR.
3. Provide typical clear cover of 1 ½" to reinforcing steel at interior or exterior walls.
4. Walls or slabs with a thickness of 8" or greater require shrinkage and temperature reinforcing steel. Provide steel area = 0.11 in²/ft each way.
5. No substitution is allowed for vertical and horizontal #4 bars in corners.
6. Manufacture base and risers to nearest 3" increment.
7. Design tongue and groove joints for full closure on both shoulders. Minimum spigot depth is ¾".
8. Provide lifting devices in conformance with Manufacturer's recommendations.
9. See sheet PDD for sizes, dimensions, and reinforcing steel not shown.

Cover dimensions are clear dimensions, unless noted otherwise.

### INSTALLATION NOTES:

1. Inverts (benching) to be provided by Contractor. Concrete or mortar used for invert is subsidiary to specified inlet or manhole.
2. Seal tongue and groove joints with preformed or bulk mastic in conformance with Manufacturer's recommendations. Tongue and groove joints may be grouted no more than 1" between each section, or ½ the joint depth, whichever is greater.
3. Do not grout rubber gasket joints without Manufacturer's recommendation.
4. For rigid pipe, cut hole in thin wall panel (KO) 4" Max, 2" Min larger than pipe OD.
5. For flexible pipe, consult boot/seal Manufacturer's specification for placement tolerance and hole size. Center pipe in hole and install boot/seal per Manufacturer's specification.

### GENERAL NOTES:

1. Precast Base consists of base slab, base unit, risers (as required), reducing slab (as required), and reduced risers (as required). See sheet PDD for sizes.
2. Designed according to ASTM C913.
3. Payment for precast base is subsidiary to the specified inlet, per Item 465, "Junction Boxes, Manholes, and Inlets."

HL93 LOADING

Texas Department of Transportation — Bridge Division Standard

# PRECAST BASE

PB

| FILE: prestd01.dgn | DN: TxDOT | CK: TxDOT | DW: TxDOT | CK: TxDOT |
|---|---|---|---|---|
| ©TxDOT January 2015 | CONT | SECT | JOB | HIGHWAY |
| REVISIONS | DIST | | COUNTY | SHEET NO. |
| | WACO | | MCLENNAN | 52 |

DISCLAIMER:
The use of this standard is governed by the "Texas Engineering Practice Act". No warranty of any kind is made by TxDOT for any purpose whatsoever. TxDOT assumes no responsibility for the conversion of this standard to other formats or for incorrect results or damages resulting from its use.

DATE:
FILE:

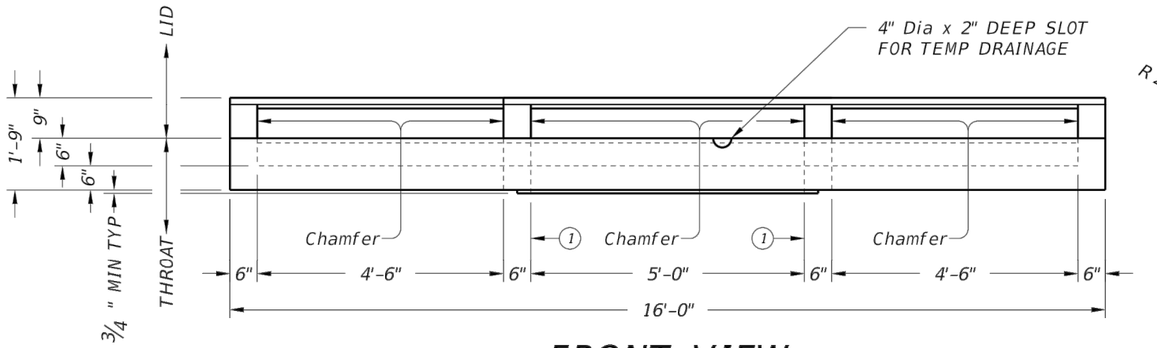


## FRONT VIEW

(SHOWING LEFT AND RIGHT EXTENSIONS)

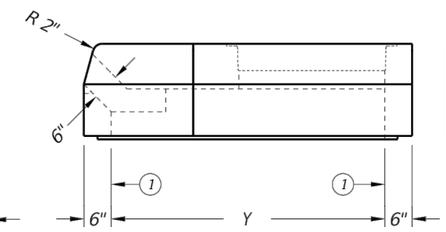


## RIGHT VIEW

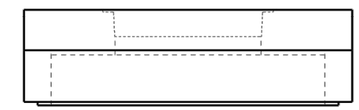

## REAR VIEW

(EXTENSIONS NOT SHOWN)

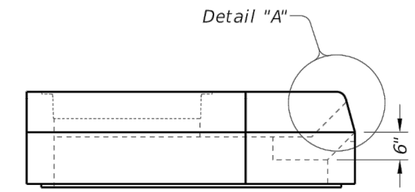


## LEFT VIEW

(1) Matches inside face of wall of precast base or riser below inlet.

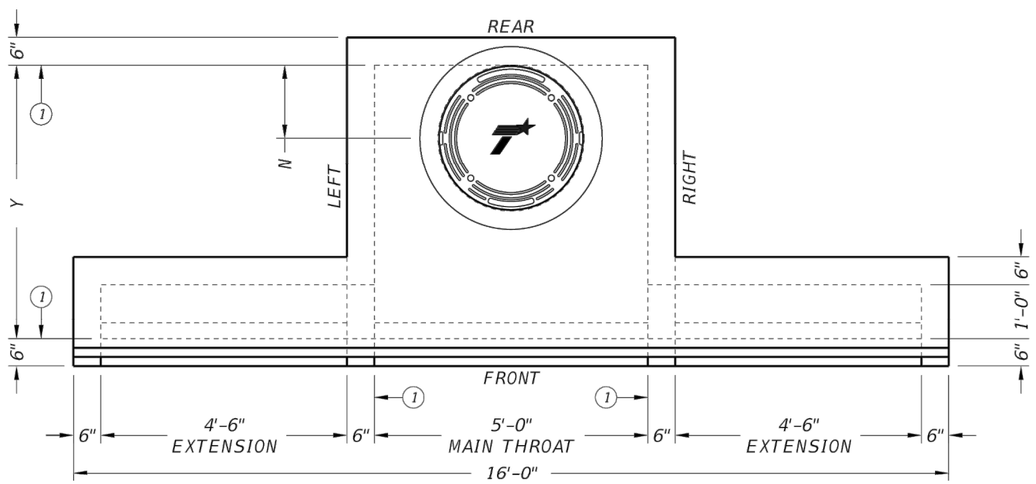


## PLAN VIEW

(SHOWING LEFT AND RIGHT EXTENSIONS)

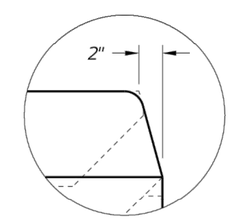


## DETAIL "A"

HS20 LOADING

SHEET 1 OF 2

Texas Department of Transportation

Bridge Division Standard

# PRECAST CURB INLET OUTSIDE ROADWAY

PCO

| | | | | |
|---|---|---|---|---|
| FILE: prestd03.dgn | DN: TxDOT | CK: TxDOT | DW: TxDOT | CK: TxDOT |
| ©TxDOT January 2015 | CONT | SECT | JOB | HIGHWAY |
| REVISIONS | | | | |
| | DIST | COUNTY | | SHEET NO. |
| | WACO | MCLENNAN | | 53 |

DISCLAIMER:
The use of this standard is governed by the "Texas Engineering Practice Act". No warranty of any kind is made by TxDOT for any purpose whatsoever. TxDOT assumes no responsibility for the conversion of this standard to other formats or for incorrect results or damages resulting from its use.

DATE:
FILE:

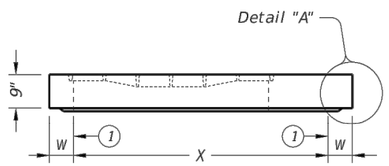


STYLE 'FG'

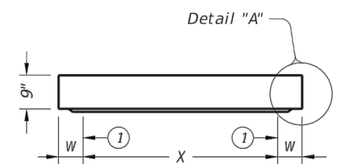


ELEVATION VIEW

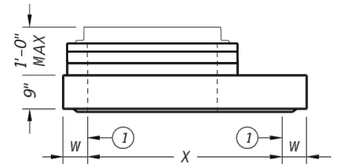


ELEVATION VIEW

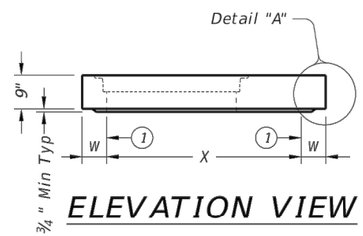


ELEVATION VIEW

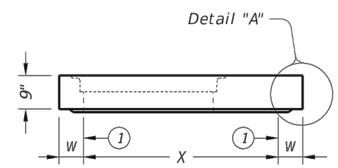


ELEVATION VIEW

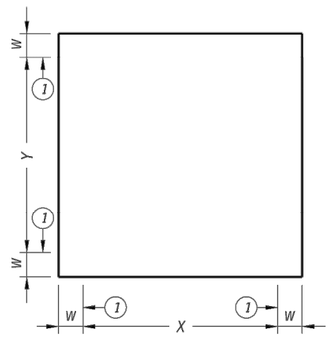


PLAN VIEW

NO OPENINGS

STYLE 'SL'

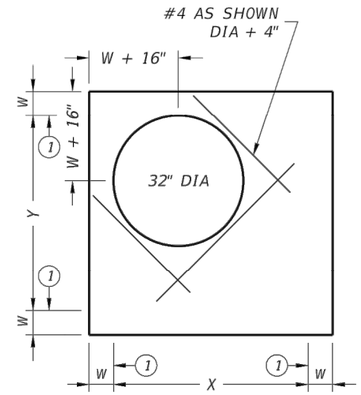


PLAN VIEW

SHIP LOOSE RING & COVER

STYLE 'RH'

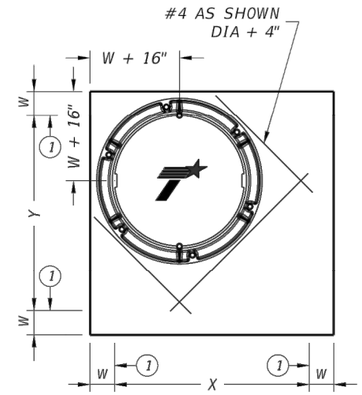


PLAN VIEW

32" DIA CAST-IN RING & COVER

STYLE 'RC'

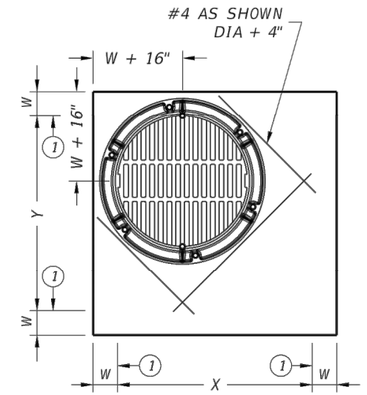


PLAN VIEW

32" DIA CAST-IN RING & GRATE

STYLE 'RG'

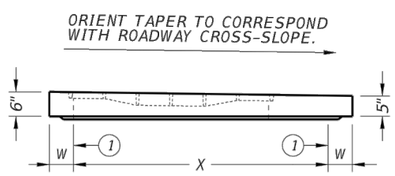


STYLE 'SFG'

ELEVATION VIEW

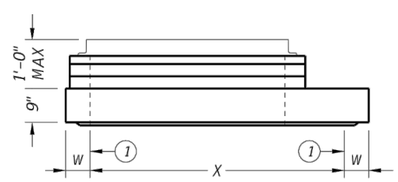


ELEVATION VIEW

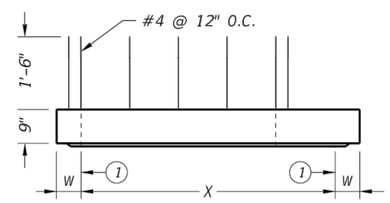


ELEVATION VIEW

1 Matches inside face of wall of precast base or riser below inlet.

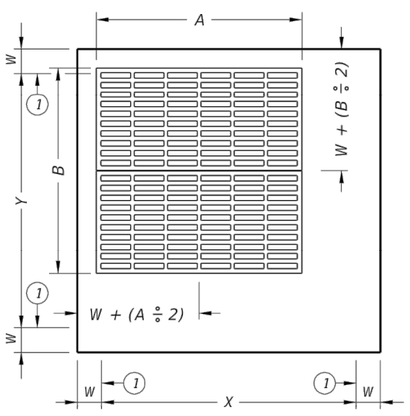


PLAN VIEW

CAST-IN FRAME & GRATE

STYLES 'FG' & 'SFG'

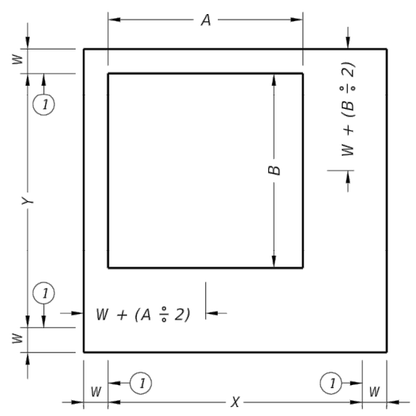


PLAN VIEW

SHIP LOOSE FRAME & GRATE

STYLE 'SH'

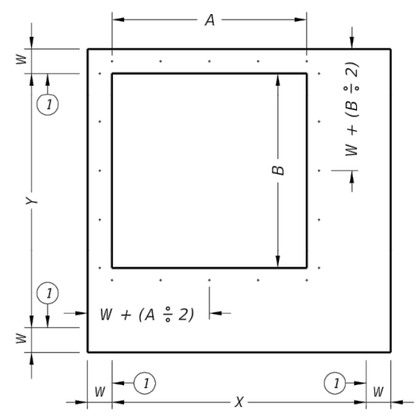


PLAN VIEW

EXPOSED REBAR

STYLE 'S1'

HL93 LOADING

SHEET 1 OF 2

Texas Department of Transportation

Bridge Division Standard

# PRECAST SLAB LID

PSL

| FILE: prestd05.dgn | DN: TxDOT | CK: TxDOT | DW: TxDOT | CK: TxDOT |
|---|---|---|---|---|
| ©TxDOT January 2015 | CONT | SECT | JOB | HIGHWAY |
| REVISIONS | | | | |
| | DIST | | COUNTY | SHEET NO. |
| | WACO | | MCLENNAN | 54 |

DISCLAIMER:
The use of this standard is governed by the "Texas Engineering Practice Act". No warranty of any kind is made by TxDOT for any purpose whatsoever. TxDOT assumes no responsibility for the conversion of this standard to other formats or for incorrect results or damages resulting from its use.

DATE:
FILE:

| | | MAX DEPTH = 15 ft. to top of BASE SLAB | | | | | | | | | | MAX DEPTH = 25 ft. to top of BASE SLAB | | | | | | | | | | | | |
|---|---|---|---|---|---|---|---|---|---|---|---|---|---|---|---|---|---|---|---|---|---|---|---|---|
| | | Base Slab | | | Base Unit or Riser Walls | | | Below Grade Slab (w/PJB) Reducing Slab (w/PB) | | | | Base Slab | | | Base Unit or Riser Walls | | | Below Grade Slab (w/PJB) Reducing Slab (w/PB) | | | | | | |
| | Size | Short Span Reinf Steel Area | Long Span Reinf Steel Area | Thickness | Short Span Reinf Steel Area | Long Span Reinf Steel Area | Thickness | Reduced Riser Size | Short Span Reinf Steel Area | Long Span Reinf Steel Area | Thickness | Short Span Reinf Steel Area | Long Span Reinf Steel Area | Thickness | Short Span Reinf Steel Area | Long Span Reinf Steel Area | Thickness | Reduced Riser Size | Short Span Reinf Steel Area | Long Span Reinf Steel Area | Thickness | Min Height (See Gen Note 3) | Max HOLE DIA (See Fab Note 2) | Max KO DIA (See Fab Note 2) |
| | X x Y | Ashort | Along | BS | Bshort | Blong | W | RWSxRWL or ID | Dshort | Dlong | TS | Ashort | Along | BS | Bshort | Blong | W | RWSxRWL or ID | Dshort | Dlong | TS | BH MIN | HOLE DIA | KO DIA |
| | ft. | $in^2/ft$ | $in^2/ft$ | in. | $in^2/ft$ | $in^2/ft$ | in. | ft. ** | $in^2/ft$ | $in^2/ft$ | in. | $in^2/ft$ | $in^2/ft$ | in. | $in^2/ft$ | $in^2/ft$ | in. | ft. ** | $in^2/ft$ | $in^2/ft$ | in. | ft. | in. | in. |
| Precast Junction Box (PJB) | 3x3 | 0.23 | 0.23 | 6 | 0.19 | 0.19 | 6 | N/A | 0.37 | 0.37 | 9 | 0.29 | 0.29 | 6 | 0.24 | 0.24 | 6 | N/A | 0.37 | 0.37 | 9 | 3.5 | 36 | 36 |
| | 4x4 | 0.29 | 0.29 | 6 | 0.24 | 0.24 | 6 | N/A | 0.41 | 0.41 | 9 | 0.47 | 0.47 | 6 | 0.38 | 0.38 | 6 | N/A | 0.41 | 0.41 | 9 | 4.5 | 48 | 48 |
| | 3x5 | 0.29 | 0.18 | 6 | 0.19 | 0.35 | 6 | N/A | 0.48 | 0.48 | 9 | 0.39 | 0.18 | 6 | 0.23 | 0.59 | 6 | N/A | 0.48 | 0.48 | 9 | 3.5 | 36/60 | 36/60 |
| | 4x5 | 0.36 | 0.18 | 6 | 0.22 | 0.34 | 6 | N/A | 0.42 | 0.42 | 9 | 0.53 | 0.26 | 6 | 0.39 | 0.59 | 6 | N/A | 0.42 | 0.42 | 9 | 4.5 | 48/60 | 48/60 |
| | 5x5 | 0.36 | 0.36 | 6 | 0.34 | 0.34 | 6 | N/A | 0.43 | 0.43 | 9 | 0.62 | 0.62 | 6 | 0.59 | 0.59 | 6 | N/A | 0.43 | 0.43 | 9 | 5.5 | 60 | 60 |
| | 5x6 | 0.27 | 0.27 | 9 | 0.34 | 0.45 | 6 | N/A | 0.48 | 0.48 | 9 | 0.47 | 0.45 | 9 | 0.38 | 0.54 | 8 | N/A | 0.48 | 0.48 | 9 | 5.5 | 60/72 | 60/72 |
| | 6x6 | 0.27 | 0.27 | 9 | 0.45 | 0.45 | 6 | N/A | 0.56 | 0.56 | 9 | 0.52 | 0.52 | 9 | 0.54 | 0.54 | 8 | N/A | 0.56 | 0.56 | 9 | 6.5 | 72 | 72 |
| | 8x8 | 0.46 | 0.46 | 9 | 0.51 | 0.51 | 8 | N/A | 0.45 | 0.45 | 12 | 0.87 | 0.87 | 9 | 0.59 | 0.59 | 10 | N/A | 0.45 | 0.45 | 12 | 8.5 | 96 | 72 |
| Precast Base (PB) | 3x3 | 0.23 | 0.23 | 6 | 0.19 | 0.19 | 6 | N/A | N/A | N/A | N/A | 0.29 | 0.29 | 6 | 0.24 | 0.24 | 6 | N/A | N/A | N/A | N/A | 3.5 | 36 | 36 |
| | 4x4 | 0.29 | 0.29 | 6 | 0.24 | 0.24 | 6 | N/A | N/A | N/A | N/A | 0.47 | 0.47 | 6 | 0.38 | 0.38 | 6 | N/A | N/A | N/A | N/A | 4.5 | 48 | 48 |
| | 3x5 | 0.29 | 0.18 | 6 | 0.19 | 0.35 | 6 | 3x3 | 0.30 | 0.34 | 9 | 0.39 | 0.18 | 6 | 0.23 | 0.59 | 6 | 3x3 | 0.40 | 0.40 | 9 | 3.5 | 36/60 | 36/60 |
| | 4x5 | 0.36 | 0.18 | 6 | 0.22 | 0.34 | 6 | 3x3 | 0.30 | 0.30 | 9 | 0.53 | 0.26 | 6 | 0.39 | 0.59 | 6 | 3x3 | 0.46 | 0.37 | 9 | 4.5 | 48/60 | 48/60 |
| | 4x5 | 0.36 | 0.18 | 6 | 0.22 | 0.34 | 6 | 4x4 | 0.30 | 0.30 | 9 | 0.53 | 0.26 | 6 | 0.39 | 0.59 | 6 | 4x4 | 0.39 | 0.39 | 9 | 4.5 | 48/60 | 48/60 |
| | 4x5 | 0.36 | 0.18 | 6 | 0.22 | 0.34 | 6 | 48" | 0.39 | 0.39 | 9 | 0.53 | 0.26 | 6 | 0.39 | 0.59 | 6 | 48" | 0.47 | 0.47 | 9 | 4.5 | 48/60 | 48/60 |
| | 4x5 | 0.36 | 0.18 | 6 | 0.22 | 0.34 | 6 | 3x5 | 0.33 | 0.40 | 9 | 0.53 | 0.26 | 6 | 0.39 | 0.59 | 6 | 3x5 | 0.48 | 0.48 | 9 | 4.5 | 48/60 | 48/60 |
| | 5x5 | 0.36 | 0.36 | 6 | 0.34 | 0.34 | 6 | 3x3 | 0.34 | 0.34 | 9 | 0.62 | 0.62 | 6 | 0.59 | 0.59 | 6 | 3x3 | 0.53 | 0.53 | 9 | 5.5 | 60 | 60 |
| | 5x5 | 0.36 | 0.36 | 6 | 0.34 | 0.34 | 6 | 4x4 | 0.36 | 0.36 | 9 | 0.62 | 0.62 | 6 | 0.59 | 0.59 | 6 | 4x4 | 0.64 | 0.64 | 9 | 5.5 | 60 | 60 |
| | 5x5 | 0.38 | 0.38 | 6 | 0.34 | 0.34 | 6 | 48" | 0.36 | 0.36 | 9 | 0.62 | 0.62 | 6 | 0.59 | 0.59 | 6 | 48" | 0.64 | 0.64 | 9 | 5.5 | 60 | 60 |
| | 5x5 | 0.36 | 0.36 | 6 | 0.34 | 0.34 | 6 | 3x5 | 0.34 | 0.40 | 9 | 0.62 | 0.62 | 6 | 0.59 | 0.59 | 6 | 3x5 | 0.53 | 0.53 | 9 | 5.5 | 60 | 60 |
| | 5x6 | 0.31 | 0.31 | 9 | 0.34 | 0.45 | 6 | 3x3 | 0.34 | 0.34 | 9 | 0.47 | 0.45 | 9 | 0.38 | 0.54 | 8 | 3x3 | 0.61 | 0.50 | 9 | 5.5 | 60/72 | 60/72 |
| | 5x6 | 0.27 | 0.27 | 9 | 0.34 | 0.45 | 6 | 4x4 | 0.36 | 0.45 | 9 | 0.47 | 0.45 | 9 | 0.38 | 0.54 | 8 | 4x4 | 0.74 | 0.57 | 9 | 5.5 | 60/72 | 60/72 |
| | 5x6 | 0.29 | 0.29 | 9 | 0.34 | 0.45 | 6 | 48" | 0.36 | 0.45 | 9 | 0.47 | 0.45 | 9 | 0.38 | 0.54 | 8 | 48" | 0.74 | 0.57 | 9 | 5.5 | 60/72 | 60/72 |
| | 5x6 | 0.29 | 0.29 | 9 | 0.34 | 0.45 | 6 | 3x5 | 0.45 | 0.45 | 9 | 0.47 | 0.45 | 9 | 0.38 | 0.54 | 8 | 3x5 | 0.61 | 0.61 | 9 | 5.5 | 60/72 | 60/72 |
| | 6x6 | 0.29 | 0.29 | 9 | 0.45 | 0.45 | 6 | 3x3 | 0.41 | 0.41 | 9 | 0.52 | 0.52 | 9 | 0.54 | 0.54 | 8 | 3x3 | 0.74 | 0.74 | 9 | 6.5 | 72 | 72 |
| | 6x6 | 0.27 | 0.27 | 9 | 0.45 | 0.45 | 6 | 4x4 | 0.45 | 0.45 | 9 | 0.52 | 0.52 | 9 | 0.54 | 0.54 | 8 | 4x4 | 0.87 | 0.87 | 9 | 6.5 | 72 | 72 |
| | 6x6 | 0.29 | 0.29 | 9 | 0.45 | 0.45 | 6 | 48" | 0.45 | 0.45 | 9 | 0.52 | 0.52 | 9 | 0.54 | 0.54 | 8 | 48" | 0.87 | 0.87 | 9 | 6.5 | 72 | 72 |
| | 6x6 | 0.29 | 0.29 | 9 | 0.45 | 0.45 | 6 | 3x5 | 0.45 | 0.45 | 9 | 0.52 | 0.52 | 9 | 0.54 | 0.54 | 8 | 3x5 | 0.87 | 0.87 | 9 | 6.5 | 72 | 72 |
| | 8x8 | 0.52 | 0.52 | 9 | 0.51 | 0.51 | 8 | 3x3 | 0.61 | 0.61 | 12 | 0.91 | 0.91 | 9 | 0.70 | 0.70 | 10 | 3x3 | 0.85 | 0.85 | 12 | 8.5 | 96 | 72 |
| | 8x8 | 0.52 | 0.52 | 9 | 0.51 | 0.51 | 8 | 4x4 | 0.70 | 0.70 | 12 | 0.87 | 0.87 | 9 | 0.70 | 0.70 | 10 | 4x4 | 1.01 | 1.01 | 12 | 8.5 | 96 | 72 |
| | 8x8 | 0.52 | 0.52 | 9 | 0.51 | 0.51 | 8 | 48" | 0.70 | 0.70 | 12 | 0.87 | 0.87 | 9 | 0.70 | 0.70 | 10 | 48" | 1.01 | 1.01 | 12 | 8.5 | 96 | 72 |
| | 8x8 | 0.52 | 0.52 | 9 | 0.51 | 0.51 | 8 | 3x5 | 0.70 | 0.85 | 12 | 0.87 | 0.87 | 9 | 0.70 | 0.70 | 10 | 3x5 | 1.01 | 1.01 | 12 | 8.5 | 96 | 72 |

** Unless otherwise indicated.

FABRICATION NOTES:
1. Maximum spacing of reinforcement is 8".
2. At manufacturer's option, provide cast or cored holes or thin wall panels (KO) to the maximum diameter shown for each. When no penetration is required, it is acceptable to provide a wall with no sectional reduction.

GENERAL NOTES:
1. Precast Junction Box consists of base slab, base unit, risers (as required), and below grade slab. See sheet PJB for details.
2. Precast Base consists of base slab, base unit, risers (as required), reducing slab (as required), and reduced risers (as required). See sheet PB for details.
3. Min Height shown is for stock base units. Use stock base units whenever practical. Smaller height base units can be used in special installation circumstances, when noted elsewhere in the plans. Absolute minimum height of base units is 2'-6".

HL93 LOADING

Texas Department of Transportation — Bridge Division Standard

# DESIGN DATA FOR PRECAST BASE AND JUNCTION BOX

PDD

| FILE: prestd10.dgn | DN: TxDOT | CK: TxDOT | DW: TxDOT | CK: TxDOT |
|---|---|---|---|---|
| ©TxDOT January 2015 | CONT | SECT | JOB | HIGHWAY |
| REVISIONS | DIST | COUNTY | | SHEET NO. |
| | WACO | MCLENNAN | | 55 |

DISCLAIMER:
The use of this standard is governed by the "Texas Engineering Practice Act". No warranty of any kind is made by TxDOT for any purpose whatsoever. TxDOT assumes no responsibility for the conversion of this standard to other formats or for incorrect results or damages resulting from its use.

DATE:
FILE:

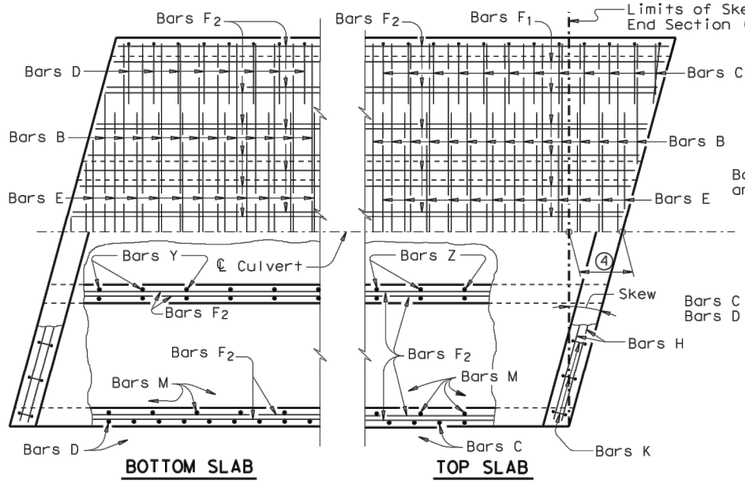


## PLAN OF SKEWED ENDS ~ FROM 0° TO 15° ⑦

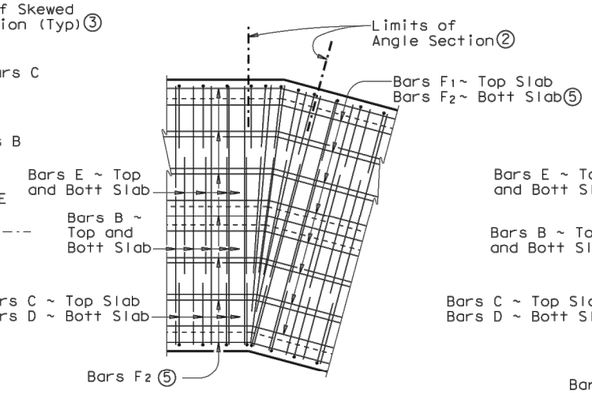


## PLAN OF ANGLE SECTION ~ FROM 0° TO 15°

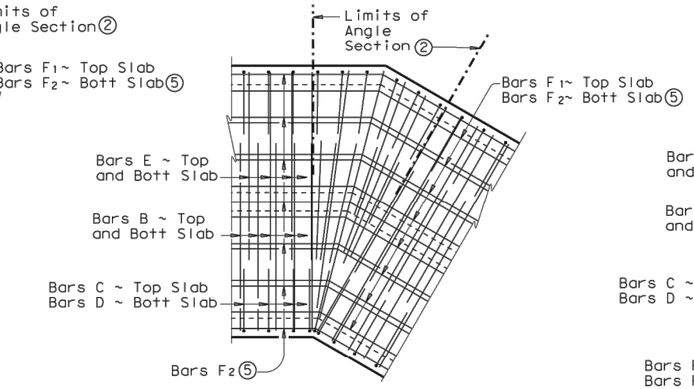


## PLAN OF ANGLE SECTION ~ OVER 15° TO 30°

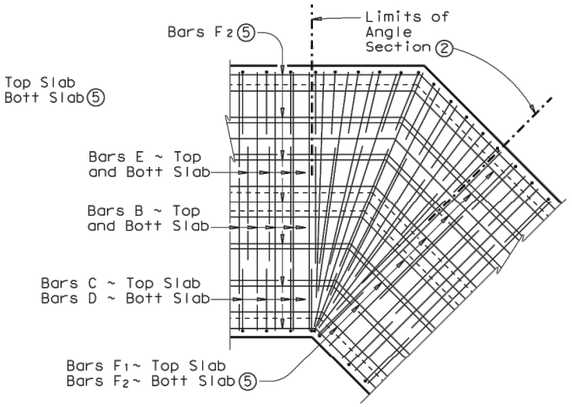


## PLAN OF ANGLE SECTION ~ OVER 30° TO 45°

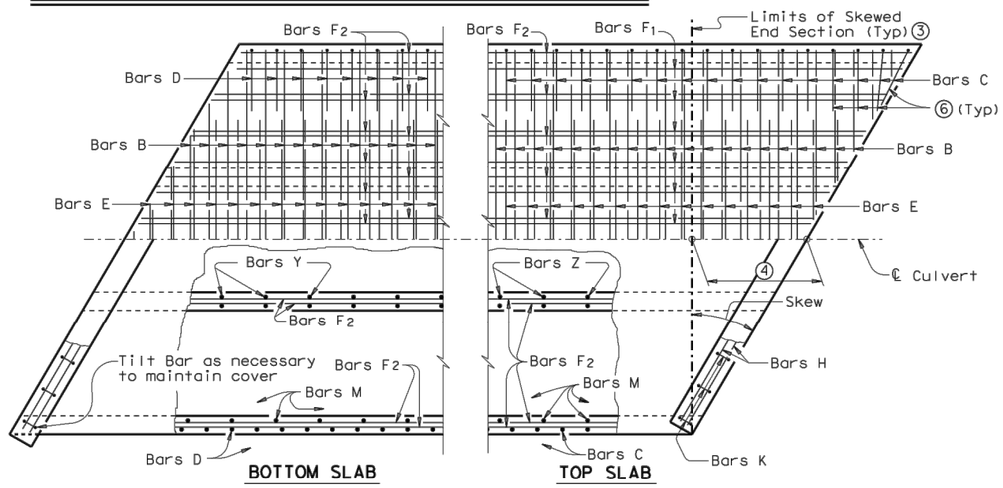


## PLAN OF SKEWED ENDS ~ OVER 15° TO 30°

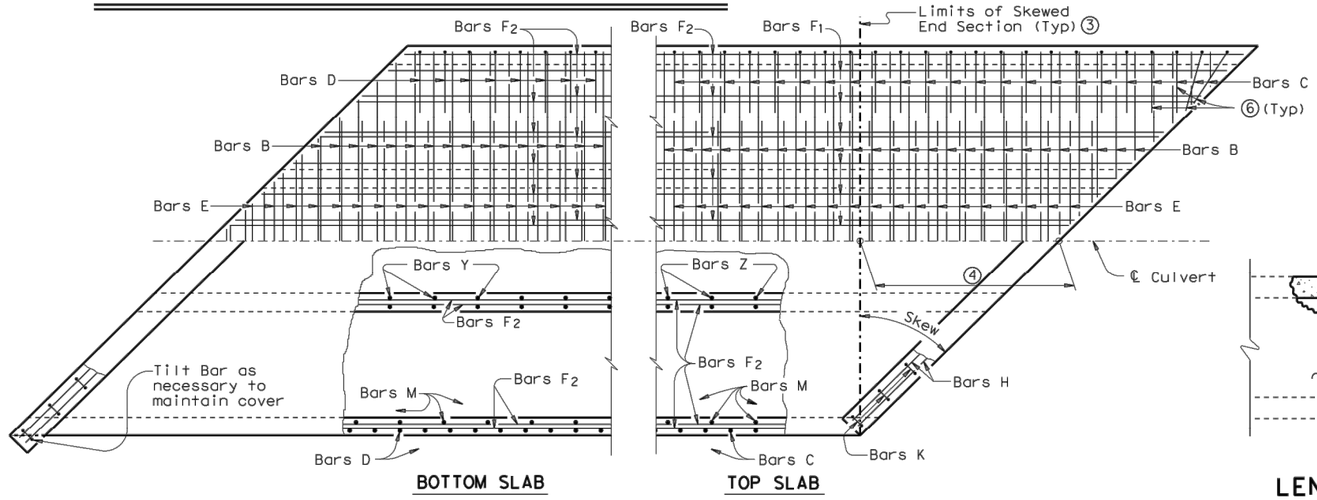


## PLAN OF SKEWED ENDS ~ OVER 30° TO 45°

### GENERAL NOTES:

Designed according to AASHTO LRFD Specifications.

All reinforcing steel shall be Grade 60.

All concrete shall be Class "C" with these exceptions: use Class "S" for top slabs of culverts with overlay, with 1-to-2 course surface treatment, or with the top slab as the final riding surface.

Class "C" concrete shall have a minimum compressive strength of 3,600 psi. Class "S" concrete shall have a minimum compressive strength of 4,000 psi.

Refer to Multiple Box Culverts Cast-in-Place standard for details of straight sections of culvert. For skewed sections and angle sections refer to Multiple Box Culverts Cast-in-Place standard for slab and wall dimensions, bar sizes, maximum bar spacing, and any other details not shown. For Skewed ends with curbs, adjust length of Bars H, number of Bars K, curb concrete volume and reinforcing steel weight by dividing the values shown on the culvert standards by the cosine of the skew angle.

The use of permanent forms is not allowed.

Laps for Bars H, when required, shall be 1'-9" for uncoated bars and 2'-7" for epoxy coated.

① For box culverts with less than 2'-0" of fill, the top slab shall be broken back to provide a minimum 1'-10" lap of the existing longitudinal bars with the longitudinal bars in the extension. If the depth of fill is 2'-0" or greater, the top slab shall be broken back to provide a 1'-0" minimum embedment of existing longitudinal reinforcing into the extension. Alternatively, if the fill height is greater than 2'-0", the existing curb may be left in place and 2'-0" long #6 bars shall be drilled and grouted 1'-0" into the existing top slab at 1'-6" center to center spacing. Wings and apron shall be broken back as necessary to install the extension. Exposed wingwall and apron reinforcing may be removed or cleaned and included in the extension. When lengthening existing box culverts with dimensions different than current standard dimensions, horizontal and vertical transitions shall be formed as directed by the Engineer. Bottom slabs shall match to maintain an uninterrupted flow line. Existing and new reinforcing shall be field bent into transition maintaining specified cover requirements. For top slabs of culverts with overlay, with 1-to-2 course surface treatment, or with the top slab as the final riding surface, the "H" dimension may be adjusted to provide a smooth riding surface.

② When the spacing between Bars B or Bars E becomes less than half of the normal spacing, bars shall be cut to avoid fouling

③ The length of Bars B and E will vary in the skewed end sections

④ [One half of overall width] x [Tan of the skew angle]

⑤ Bars F1 and F2 shall be continuous through the angle section. They shall be bent to remain parallel to the walls of the Box Culvert.

⑥ When necessary to avoid fouling in acute corners, the slab extension leg of Bars C and Bars D may be shortened to a minimum of 1'-6" for skews of 30° and 45°.

⑦ For skews of 15° or less, the contractor has the option of placing Bars B, C, D and E parallel to the skewed end while maintaining spacing along centerline box. Lengths of Bars B and E shown on the standards shall be increased to accommodate the skew.

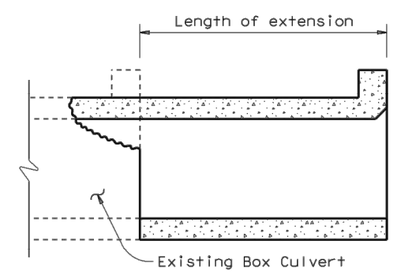


## LENGTHENING DETAIL ①

HL93 LOADING

Texas Department of Transportation — Bridge Division Standard

# MULTIPLE BOX CULVERTS CAST-IN-PLACE MISCELLANEOUS DETAILS

## MC-MD

| FILE: mc-mdste.dgn | DN: GAF | CK: LMW | DW: BWH/TxDOT | CK: GAF |
|---|---|---|---|---|
| ©TxDOT February 2010 | CONT | SECT | JOB | HIGHWAY |
| REVISIONS | DIST | | COUNTY | SHEET NO. |
| | WACO | | MCLENNAN | 56 |

DISCLAIMER:
The use of this standard is governed by the "Texas Engineering Practice Act". No warranty of any kind is made by TxDOT for any purpose whatsoever. TxDOT assumes no responsibility for the conversion of this standard to other formats or for incorrect results or damages resulting from its use.

DATE:
FILE:

DISCLAIMER:
The use of this standard is governed by the "Texas Engineering Practice Act". No warranty of any kind is made by TxDOT for any purpose whatsoever. TxDOT assumes no responsibility for the conversion of this standard to other formats or for incorrect results or damages resulting from its use.

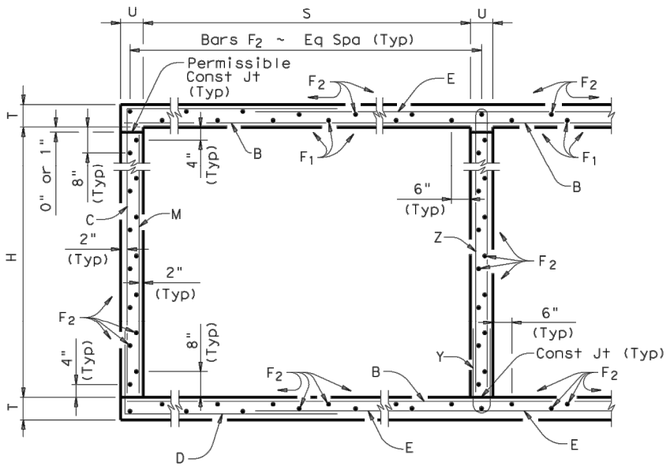


## TYPICAL SECTION

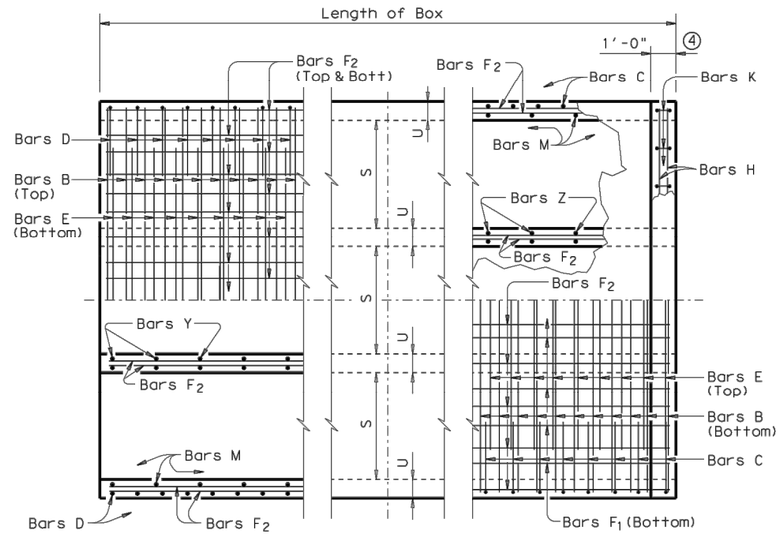


BOTTOM SLAB

TOP SLAB

## PART PLANS

① 0" min to 5'-0" max. Estimated curb heights are shown elsewhere in the plans. For structures with pedestrian rail, bicycle rail or curbs taller than 1'-0", refer to ECD standard. For structures with T6 bridge rail, refer to T6-CM standard. For structures with traffic rail, other than T6, refer to RAC standard.

② For vehicle safety, the following requirements must be met:
- For structures without bridge rail, curbs shall project no more than 3" above finished grade.
- For structures with bridge rail, curbs shall be flush with finished grade.
Curb heights shall be reduced, if necessary, to meet the above requirements. No changes will be made in quantities and no additional compensation will be allowed for this work.

③ For curbs less than 1'-0" high, tilt bars K or reduce bar height as necessary to maintain cover. For curbs less than 3" high, bars K may be omitted.

④ 1'-0" typical. 2'-0" when RAC standard is referred to elsewhere in the plans.

Deformed welded wire reinforcement (WWR) meeting the requirements of ASTM A1064 may be used to replace conventional reinforcement shown at the Contractor's option. The area of required reinforcement may be reduced by the ratio of 60 ksi / 70 ksi. Spacing of WWR is limited to 4" Min and 18" Max. When required, provide lap splices in the WWR of the same length required for the equivalent bar size, rounded up for wire sizes between conventional bar sizes.

Example Conversion: Replacement of No. 6 Gr 60 at 6" Spacing with WWR.
WWR required = (0.44 sq in/ 0.5') x (60 ksi/70 ksi) = 0.754 sq in/ft.
If D30.6 wire is used to meet the 0.754 sq in/ft requirement in this example, the required spacing = (0.306 sq in/ 0.754 sq in/ft) x 12 in/ft = 4.87" Max spacing.
Required lap length for the provided D30.6 wire is 2'-2" (Lap required for uncoated No. 5 bars, as shown in Item 440).

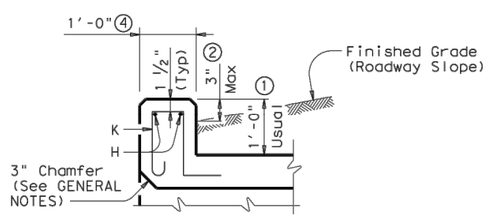


## SECTION THRU CURB

| H | Bar Dimensions | |
|---|---|---|
| | "X" | "Y" |
| 5'-0" | 5'-6" | 2'- 3" |
| 6'-0" | 6'-6" | 2'- 3" |
| 7'-0" | 7'-6" | 2'- 3" |
| 8'-0" | 8'-6" | 2'- 3" |
| 9'-0" | 9'-6" | 2'- 3" |
| 10'-0" | 10'-6" | 2'- 8" |

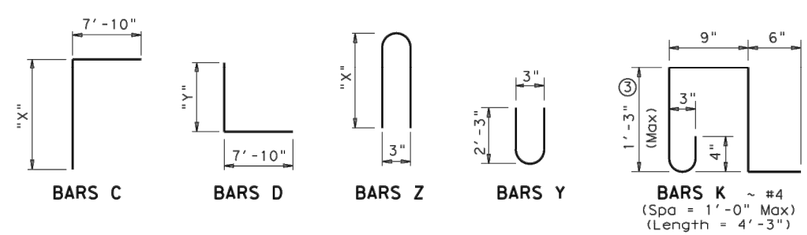


BARS C

BARS D

BARS Z

BARS Y

BARS K ~ #4
(Spa = 1'-0" Max)
(Length = 4'-3")

**GENERAL NOTES:**

Designed according to AASHTO LRFD Specifications.
Designed to the maximum fill height shown.
All reinforcing steel shall be Grade 60.
All concrete shall be Class "C" with these exceptions: use Class "S" for top slabs of culverts with overlay, with 1-to-2 course surface treatment, or with the top slab as the final riding surface.
Class "C" concrete shall have a minimum compressive strength of 3,600 psi. Class "S" concrete shall have a minimum compressive strength of 4,000 psi.
The use of permanent forms is not allowed.
The bottom edge of the top slab shall be chamfered 3" at the entrance.
Reinforcing bars shall be adjusted to provide a minimum of 1 1/4" clear cover.
Construction joints shown at the flow line may be raised a maximum of 6" at the Contractor's option. If this option is used, Bars M may be cut off or raised, Bars C and D may be reversed, and Bars Y and Z may be reversed.
See standard MC-MD for skewed ends, angle sections and lengthening details.

HL93 LOADING

SHEET 1 OF 2

Texas Department of Transportation — Bridge Division Standard

# MULTIPLE BOX CULVERTS CAST-IN-PLACE
## 10'-0" SPAN
## 0' TO 7' FILL

## MC-10-7

| FILE: mc107ste.dgn | DN: GAF | CK: LMW | DW: BWH/TxDOT | CK: GAF |
|---|---|---|---|---|
| ©TxDOT February 2010 | CONT | SECT | JOB | HIGHWAY |
| REVISIONS | | | | |
| 10-12: Added WWR | DIST | COUNTY | | SHEET NO. |
| | WACO | MCLENNAN | | 57 |

DATE:
FILE:

# BILLS OF REINFORCING STEEL (For Box Length = 40 feet)

| NUMBER OF SPANS | SECTION DIMENSIONS | | | | Bars B⑤ | | | | | Bars C & D | | | | | | | Bars E | | | | | Bars $F_1$~#4 | | | | Bars $F_2$~#4 at 1'-6" Max | | | Bars M~#4 at 1'-6" Max | | | Bars Y & Z~#4 at 8" Max | | | | | Bars H⑤ 4~#4 | | Bars K | | QUANTITIES: Per foot of Barrel | | Curb | | Total | |
|---|---|---|---|---|---|---|---|---|---|---|---|---|---|---|---|---|---|---|---|---|---|---|---|---|---|---|---|---|---|---|---|---|---|---|---|---|---|---|---|---|---|---|---|---|---|---|
| | | | | | | | | | | | | | Bar C | | Bar D | | | | | | | | | | | | | | | | | | | | | | | | | | | | | | | |
| | S | H | T | U | No. | Size | Spa | Length | Wt | No. | Size | Spa | Length | Wt | Length | Wt | No. | Size | Spa | Length | Wt | No. | Spa | Length | Wt | No. | Length | Wt | No. | Length | Wt | No. | Bar Y Length | Bar Y Wt | Bar Z Length | Bar Z Wt | Length | Weight | No. | Weight | Conc (CY) | Reinf (Lb) | Conc (CY) | Reinf (Lb) | Conc (CY) | Reinf (Lb) |
| 2 | 10'-0" | 5'-0" | 8" | 7" | 162 | #6 | 6" | 21'- 6" | 5,231 | 194 | #4 | 5" | 13'- 4" | 1,728 | 10'- 1" | 1,307 | 162 | #6 | 6" | 11'- 0" | 2,677 | 30 | 8" | 39'-9" | 797 | 72 | 39'-9" | 1,912 | 56 | 5'- 0" | 187 | 61 | 4'- 8" | 190 | 11'- 2" | 455 | 21'- 6" | 57 | 46 | 131 | 1.398 | 362.1 | 1.6 | 188 | 57.5 | 14,672 |
| 3 | 10'-0" | 5'-0" | 8" | 7" | 162 | #6 | 6" | 32'- 1" | 7,807 | 194 | #4 | 5" | 13'- 4" | 1,728 | 10'- 1" | 1,307 | 162 | #6 | 6" | 21'- 7" | 5,252 | 45 | 8" | 39'-9" | 1,195 | 103 | 39'-9" | 2,735 | 56 | 5'- 0" | 187 | 122 | 4'- 8" | 380 | 11'- 2" | 910 | 32'- 1" | 86 | 66 | 187 | 2.029 | 537.5 | 2.4 | 273 | 83.6 | 21,774 |
| 4 | 10'-0" | 5'-0" | 8" | 7" | 162 | #6 | 6" | 42'- 8" | 10,382 | 194 | #4 | 5" | 13'- 4" | 1,728 | 10'- 1" | 1,307 | 162 | #6 | 6" | 32'- 2" | 7,827 | 60 | 8" | 39'-9" | 1,593 | 134 | 39'-9" | 3,558 | 56 | 5'- 0" | 187 | 183 | 4'- 8" | 570 | 11'- 2" | 1,365 | 42'- 8" | 114 | 88 | 250 | 2.659 | 712.9 | 3.2 | 364 | 109.6 | 28,881 |
| 5 | 10'-0" | 5'-0" | 8" | 7" | 162 | #6 | 6" | 53'- 3" | 12,957 | 194 | #4 | 5" | 13'- 4" | 1,728 | 10'- 1" | 1,307 | 162 | #6 | 6" | 42'- 9" | 10,402 | 75 | 8" | 39'-9" | 1,991 | 165 | 39'-9" | 4,381 | 56 | 5'- 0" | 187 | 244 | 4'- 8" | 761 | 11'- 2" | 1,820 | 53'- 3" | 142 | 110 | 312 | 3.290 | 888.4 | 4.0 | 454 | 135.6 | 35,988 |
| 6 | 10'-0" | 5'-0" | 8" | 7" | 162 | #6 | 6" | 66'- 5" | 16,161 | 194 | #4 | 5" | 13'- 4" | 1,728 | 10'- 1" | 1,307 | 162 | #6 | 6" | 53'- 4" | 12,977 | 90 | 8" | 39'-9" | 2,390 | 196 | 39'-9" | 5,204 | 56 | 5'- 0" | 187 | 305 | 4'- 8" | 951 | 11'- 2" | 2,275 | 65'- 7" | 175 | 130 | 369 | 3.921 | 1,079.5 | 4.7 | 544 | 161.5 | 43,724 |
| 2 | 10'-0" | 6'-0" | 8" | 7" | 162 | #6 | 6" | 21'- 6" | 5,231 | 194 | #4 | 5" | 14'- 4" | 1,857 | 10'- 1" | 1,307 | 162 | #6 | 6" | 11'- 0" | 2,677 | 30 | 8" | 39'-9" | 797 | 78 | 39'-9" | 2,071 | 56 | 6'- 0" | 224 | 61 | 4'- 8" | 190 | 13'- 2" | 537 | 21'- 6" | 57 | 46 | 131 | 1.463 | 372.3 | 1.6 | 188 | 60.1 | 15,079 |
| 3 | 10'-0" | 6'-0" | 8" | 7" | 162 | #6 | 6" | 32'- 1" | 7,807 | 194 | #4 | 5" | 14'- 4" | 1,857 | 10'- 1" | 1,307 | 162 | #6 | 6" | 21'- 7" | 5,252 | 45 | 8" | 39'-9" | 1,195 | 111 | 39'-9" | 2,947 | 56 | 6'- 0" | 224 | 122 | 4'- 8" | 380 | 13'- 2" | 1,073 | 32'- 1" | 86 | 66 | 187 | 2.115 | 551.1 | 2.4 | 273 | 87.0 | 22,315 |
| 4 | 10'-0" | 6'-0" | 8" | 7" | 162 | #6 | 6" | 42'- 8" | 10,382 | 194 | #4 | 5" | 14'- 4" | 1,857 | 10'- 1" | 1,307 | 162 | #6 | 6" | 32'- 2" | 7,827 | 60 | 8" | 39'-9" | 1,593 | 144 | 39'-9" | 3,824 | 56 | 6'- 0" | 224 | 183 | 4'- 8" | 570 | 13'- 2" | 1,610 | 42'- 8" | 114 | 88 | 250 | 2.767 | 729.9 | 3.2 | 364 | 113.9 | 29,558 |
| 5 | 10'-0" | 6'-0" | 8" | 7" | 162 | #6 | 6" | 53'- 3" | 12,957 | 194 | #4 | 5" | 14'- 4" | 1,857 | 10'- 1" | 1,307 | 162 | #6 | 6" | 42'- 9" | 10,402 | 75 | 8" | 39'-9" | 1,991 | 177 | 39'-9" | 4,700 | 56 | 6'- 0" | 224 | 244 | 4'- 8" | 761 | 13'- 2" | 2,146 | 53'- 3" | 142 | 110 | 312 | 3.420 | 908.6 | 4.0 | 454 | 140.8 | 36,799 |
| 6 | 10'-0" | 6'-0" | 8" | 7" | 162 | #6 | 6" | 66'- 5" | 16,161 | 194 | #4 | 5" | 14'- 4" | 1,857 | 10'- 1" | 1,307 | 162 | #6 | 6" | 53'- 4" | 12,977 | 90 | 8" | 39'-9" | 2,390 | 210 | 39'-9" | 5,576 | 56 | 6'- 0" | 224 | 305 | 4'- 8" | 951 | 13'- 2" | 2,683 | 65'- 7" | 175 | 130 | 369 | 4.072 | 1,103.2 | 4.7 | 544 | 167.6 | 44,670 |
| 2 | 10'-0" | 7'-0" | 8" | 7" | 162 | #6 | 6" | 21'- 6" | 5,231 | 194 | #4 | 5" | 15'- 4" | 1,987 | 10'- 1" | 1,307 | 162 | #6 | 6" | 11'- 0" | 2,677 | 30 | 8" | 39'-9" | 797 | 78 | 39'-9" | 2,071 | 56 | 7'- 0" | 262 | 61 | 4'- 8" | 190 | 15'- 2" | 618 | 21'- 6" | 57 | 46 | 131 | 1.528 | 378.5 | 1.6 | 188 | 62.7 | 15,328 |
| 3 | 10'-0" | 7'-0" | 8" | 7" | 162 | #6 | 6" | 32'- 1" | 7,807 | 194 | #4 | 5" | 15'- 4" | 1,987 | 10'- 1" | 1,307 | 162 | #6 | 6" | 21'- 7" | 5,252 | 45 | 8" | 39'-9" | 1,195 | 111 | 39'-9" | 2,947 | 56 | 7'- 0" | 262 | 122 | 4'- 8" | 380 | 15'- 2" | 1,236 | 32'- 1" | 86 | 66 | 187 | 2.202 | 559.3 | 2.4 | 273 | 90.5 | 22,646 |
| 4 | 10'-0" | 7'-0" | 8" | 7" | 162 | #6 | 6" | 42'- 8" | 10,382 | 194 | #4 | 5" | 15'- 4" | 1,987 | 10'- 1" | 1,307 | 162 | #6 | 6" | 32'- 2" | 7,827 | 60 | 8" | 39'-9" | 1,593 | 144 | 39'-9" | 3,824 | 56 | 7'- 0" | 262 | 183 | 4'- 8" | 570 | 15'- 2" | 1,854 | 42'- 8" | 114 | 88 | 250 | 2.876 | 740.2 | 3.2 | 364 | 118.2 | 29,970 |
| 5 | 10'-0" | 7'-0" | 8" | 7" | 162 | #6 | 6" | 53'- 3" | 12,957 | 194 | #4 | 5" | 15'- 4" | 1,987 | 10'- 1" | 1,307 | 162 | #6 | 6" | 42'- 9" | 10,402 | 75 | 8" | 39'-9" | 1,991 | 177 | 39'-9" | 4,700 | 56 | 7'- 0" | 262 | 244 | 4'- 8" | 761 | 15'- 2" | 2,472 | 53'- 3" | 142 | 110 | 312 | 3.549 | 921.0 | 4.0 | 454 | 146.0 | 37,293 |
| 6 | 10'-0" | 7'-0" | 8" | 7" | 162 | #6 | 6" | 66'- 5" | 16,161 | 194 | #4 | 5" | 15'- 4" | 1,987 | 10'- 1" | 1,307 | 162 | #6 | 6" | 53'- 4" | 12,977 | 90 | 8" | 39'-9" | 2,390 | 210 | 39'-9" | 5,576 | 56 | 7'- 0" | 262 | 305 | 4'- 8" | 951 | 15'- 2" | 3,090 | 65'- 7" | 175 | 130 | 369 | 4.223 | 1,117.5 | 4.7 | 544 | 173.6 | 45,245 |
| 2 | 10'-0" | 8'-0" | 8" | 7" | 162 | #6 | 6" | 21'- 6" | 5,231 | 194 | #4 | 5" | 16'- 4" | 2,117 | 10'- 1" | 1,307 | 162 | #6 | 6" | 11'- 0" | 2,677 | 30 | 8" | 39'-9" | 797 | 84 | 39'-9" | 2,230 | 56 | 8'- 0" | 299 | 61 | 4'- 8" | 190 | 17'- 2" | 700 | 21'- 6" | 57 | 46 | 131 | 1.593 | 388.7 | 1.6 | 188 | 65.3 | 15,736 |
| 3 | 10'-0" | 8'-0" | 8" | 7" | 162 | #6 | 6" | 32'- 1" | 7,807 | 194 | #4 | 5" | 16'- 4" | 2,117 | 10'- 1" | 1,307 | 162 | #6 | 6" | 21'- 7" | 5,252 | 45 | 8" | 39'-9" | 1,195 | 119 | 39'-9" | 3,160 | 56 | 8'- 0" | 299 | 122 | 4'- 8" | 380 | 17'- 2" | 1,399 | 32'- 1" | 86 | 66 | 187 | 2.288 | 572.9 | 2.4 | 273 | 93.9 | 23,189 |
| 4 | 10'-0" | 8'-0" | 8" | 7" | 162 | #6 | 6" | 42'- 8" | 10,382 | 194 | #4 | 5" | 16'- 4" | 2,117 | 10'- 1" | 1,307 | 162 | #6 | 6" | 32'- 2" | 7,827 | 60 | 8" | 39'-9" | 1,593 | 154 | 39'-9" | 4,089 | 56 | 8'- 0" | 299 | 183 | 4'- 8" | 570 | 17'- 2" | 2,099 | 42'- 8" | 114 | 88 | 250 | 2.984 | 757.1 | 3.2 | 364 | 122.6 | 30,647 |
| 5 | 10'-0" | 8'-0" | 8" | 7" | 162 | #6 | 6" | 53'- 3" | 12,957 | 194 | #4 | 5" | 16'- 4" | 2,117 | 10'- 1" | 1,307 | 162 | #6 | 6" | 42'- 9" | 10,402 | 75 | 8" | 39'-9" | 1,991 | 189 | 39'-9" | 5,019 | 56 | 8'- 0" | 299 | 244 | 4'- 8" | 761 | 17'- 2" | 2,798 | 53'- 3" | 142 | 110 | 312 | 3.679 | 941.3 | 4.0 | 454 | 151.2 | 38,105 |
| 6 | 10'-0" | 8'-0" | 8" | 7" | 162 | #6 | 6" | 66'- 5" | 16,161 | 194 | #4 | 5" | 16'- 4" | 2,117 | 10'- 1" | 1,307 | 162 | #6 | 6" | 53'- 4" | 12,977 | 90 | 8" | 39'-9" | 2,390 | 224 | 39'-9" | 5,948 | 56 | 8'- 0" | 299 | 305 | 4'- 8" | 951 | 17'- 2" | 3,498 | 65'- 7" | 175 | 130 | 369 | 4.374 | 1,141.2 | 4.7 | 544 | 179.7 | 46,192 |
| 2 | 10'-0" | 9'-0" | 8" | 7" | 162 | #6 | 6" | 21'- 6" | 5,231 | 194 | #4 | 5" | 17'- 4" | 2,246 | 10'- 1" | 1,307 | 162 | #6 | 6" | 11'- 0" | 2,677 | 30 | 8" | 39'-9" | 797 | 90 | 39'-9" | 2,390 | 56 | 9'- 0" | 337 | 61 | 4'- 8" | 190 | 19'- 2" | 781 | 21'- 6" | 57 | 46 | 131 | 1.657 | 398.9 | 1.6 | 188 | 67.9 | 16,144 |
| 3 | 10'-0" | 9'-0" | 8" | 7" | 162 | #6 | 6" | 32'- 1" | 7,807 | 194 | #4 | 5" | 17'- 4" | 2,246 | 10'- 1" | 1,307 | 162 | #6 | 6" | 21'- 7" | 5,252 | 45 | 8" | 39'-9" | 1,195 | 127 | 39'-9" | 3,372 | 56 | 9'- 0" | 337 | 122 | 4'- 8" | 380 | 19'- 2" | 1,562 | 32'- 1" | 86 | 66 | 187 | 2.374 | 586.5 | 2.4 | 273 | 97.4 | 23,731 |
| 4 | 10'-0" | 9'-0" | 8" | 7" | 162 | #6 | 6" | 42'- 8" | 10,382 | 194 | #4 | 5" | 17'- 4" | 2,246 | 10'- 1" | 1,307 | 162 | #6 | 6" | 32'- 2" | 7,827 | 60 | 8" | 39'-9" | 1,593 | 164 | 39'-9" | 4,355 | 56 | 9'- 0" | 337 | 183 | 4'- 8" | 570 | 19'- 2" | 2,343 | 42'- 8" | 114 | 88 | 250 | 3.092 | 774.0 | 3.2 | 364 | 126.9 | 31,324 |
| 5 | 10'-0" | 9'-0" | 8" | 7" | 162 | #6 | 6" | 53'- 3" | 12,957 | 194 | #4 | 5" | 17'- 4" | 2,246 | 10'- 1" | 1,307 | 162 | #6 | 6" | 42'- 9" | 10,402 | 75 | 8" | 39'-9" | 1,991 | 201 | 39'-9" | 5,337 | 56 | 9'- 0" | 337 | 244 | 4'- 8" | 761 | 19'- 2" | 3,124 | 53'- 3" | 142 | 110 | 312 | 3.809 | 961.6 | 4.0 | 454 | 156.4 | 38,916 |
| 6 | 10'-0" | 9'-0" | 8" | 7" | 162 | #6 | 6" | 66'- 5" | 16,161 | 162 | #5 | 6" | 17'- 4" | 2,929 | 10'- 6" | 1,774 | 162 | #6 | 6" | 53'- 4" | 12,977 | 90 | 8" | 39'-9" | 2,390 | 238 | 39'-9" | 6,320 | 56 | 9'- 0" | 337 | 305 | 4'- 8" | 951 | 19'- 2" | 3,905 | 65'- 7" | 175 | 130 | 369 | 4.526 | 1,193.6 | 4.7 | 544 | 185.7 | 48,288 |
| 2 | 10'-0" | 10'-0" | 8" | 7" | 162 | #6 | 6" | 21'- 6" | 5,231 | 162 | #5 | 6" | 18'- 4" | 3,098 | 10'- 6" | 1,774 | 162 | #6 | 6" | 11'- 0" | 2,677 | 30 | 8" | 39'-9" | 797 | 90 | 39'-9" | 2,390 | 56 | 10'- 0" | 374 | 61 | 4'- 8" | 190 | 21'- 2" | 862 | 21'- 6" | 57 | 46 | 131 | 1.722 | 434.8 | 1.6 | 188 | 70.5 | 17,581 |
| 3 | 10'-0" | 10'-0" | 8" | 7" | 162 | #6 | 6" | 32'- 1" | 7,807 | 162 | #5 | 6" | 18'- 4" | 3,098 | 10'- 6" | 1,774 | 162 | #6 | 6" | 21'- 7" | 5,252 | 45 | 8" | 39'-9" | 1,195 | 127 | 39'-9" | 3,372 | 56 | 10'- 0" | 374 | 122 | 4'- 8" | 380 | 21'- 2" | 1,725 | 32'- 1" | 86 | 66 | 187 | 2.461 | 624.4 | 2.4 | 273 | 100.8 | 25,250 |
| 4 | 10'-0" | 10'-0" | 8" | 7" | 162 | #6 | 6" | 42'- 8" | 10,382 | 162 | #5 | 6" | 18'- 4" | 3,098 | 10'- 6" | 1,774 | 162 | #6 | 6" | 32'- 2" | 7,827 | 60 | 8" | 39'-9" | 1,593 | 164 | 39'-9" | 4,355 | 56 | 10'- 0" | 374 | 183 | 4'- 8" | 570 | 21'- 2" | 2,587 | 42'- 8" | 114 | 88 | 250 | 3.200 | 814.0 | 3.2 | 364 | 131.2 | 32,924 |
| 5 | 10'-0" | 10'-0" | 8" | 7" | 162 | #6 | 6" | 53'- 3" | 12,957 | 162 | #5 | 6" | 18'- 4" | 3,098 | 10'- 6" | 1,774 | 162 | #6 | 6" | 42'- 9" | 10,402 | 75 | 8" | 39'-9" | 1,991 | 201 | 39'-9" | 5,337 | 56 | 10'- 0" | 374 | 244 | 4'- 8" | 761 | 21'- 2" | 3,450 | 53'- 3" | 142 | 110 | 312 | 3.938 | 1,003.6 | 4.0 | 454 | 161.5 | 40,598 |
| 6 | 10'-0" | 10'-0" | 8" | 7" | 162 | #6 | 6" | 66'- 5" | 16,161 | 162 | #5 | 6" | 18'- 4" | 3,098 | 10'- 6" | 1,774 | 162 | #6 | 6" | 53'- 4" | 12,977 | 90 | 8" | 39'-9" | 2,390 | 238 | 39'-9" | 6,320 | 56 | 10'- 0" | 374 | 305 | 4'- 8" | 951 | 21'- 2" | 4,312 | 65'- 7" | 175 | 130 | 369 | 4.677 | 1,208.9 | 4.7 | 544 | 191.8 | 48,901 |

⑤ Bar lengths over 60' include one bar lap as follows:
#4 = 1'-9", #5 = 2'-2", & #6 = 2'-7"
For Epoxy coated reinforcing, bar laps shall be as follows:
#4 = 2'-7", #5 = 3'-3", & #6 = 3'-10"

Deformed welded wire reinforcement (WWR) meeting the requirements of ASTM A1064 may be used to replace conventional reinforcement shown at the Contractor's option. The area of required reinforcement may be reduced by the ratio of 60 ksi / 70 ksi. Spacing of WWR is limited to 4" Min and 18" Max. When required, provide lap splices in the WWR of the same length required for the equivalent bar size, rounded up for wire sizes between conventional bar sizes.

Example Conversion: Replacement of No. 6 Gr 60 at 6" Spacing with WWR.
WWR required = (0.44 sq in/ 0.5') x (60 ksi/70 ksi) = 0.754 sq in/ft.
If D30.6 wire is used to meet the 0.754 sq in/ft requirement in this example, the required spacing = (0.306 sq in/ 0.754 sq in/ft) x 12 in/ft = 4.87" Max spacing.
Required lap length for the provided D30.6 wire is 2'-2" (Lap required for uncoated No. 5 bars, as shown in Item 440).

DISCLAIMER:
The use of this standard is governed by the "Texas Engineering Practice Act". No warranty of any kind is made by TxDOT for any purpose whatsoever. TxDOT assumes no responsibility for the conversion of this standard to other formats or for incorrect results or damages resulting from its use.

HL93 LOADING



Texas Department of Transportation — Bridge Division Standard

# MULTIPLE BOX CULVERTS CAST-IN-PLACE
## 10'-0" SPAN
## 0' TO 7' FILL

## MC-10-7

| FILE: mc107ste.dgn | DN: GAF | CK: LMW | DW: BWH/TxDOT | CK: GAF |
|---|---|---|---|---|
| ©TxDOT February 2010 | CONT | SECT | JOB | HIGHWAY |
| REVISIONS | | | | |
| 10-12: Added WWR | DIST | COUNTY | | SHEET NO. |
| | WACO | MCLENNAN | | 59 |

DATE:
FILE:

## TABLE OF VARIABLE DIMENSIONS AND QUANTITIES FOR ONE HEADWALL (4)

| SLOPE | DIA OF PIPE, D | Values for one Pipe | | | | | | Values to be added for each addt'l Pipe | | |
|---|---|---|---|---|---|---|---|---|---|---|
| | | W | X | Y | L | Reinf (Lbs) | Conc (CY) (1) | X and W | Reinf (Lbs) | Conc (CY) (1) |
| 2:1 | 12" | 4'- 7 1/2" | 2'- 6" | 2'-10" | 3'- 3 1/4" | 84 | 0.6 | 1'- 9" | 20 | 0.2 |
| | 15" | 5'- 5 3/4" | 2'- 9 1/2" | 3'- 4" | 3'-10 1/4" | 99 | 0.7 | 2'- 2" | 24 | 0.3 |
| | 18" | 6'- 4 1/4" | 3'- 1" | 3'-10" | 4'- 5" | 120 | 0.9 | 2'- 8" | 32 | 0.3 |
| | 21" | 7'- 2 3/4" | 3'- 4 1/2" | 4'- 4" | 5'- 0" | 137 | 1.1 | 3'- 1" | 43 | 0.4 |
| | 24" | 8'- 2 1/2" | 3'- 9 1/2" | 4'-10" | 5'- 7" | 158 | 1.3 | 3'- 7" | 50 | 0.5 |
| | 27" | 9'- 1" | 4'- 1" | 5'- 4" | 6'- 2" | 173 | 1.5 | 3'-11" | 56 | 0.6 |
| | 30" | 9'-11 1/2" | 4'- 4 1/2" | 5'-10" | 6'- 8 3/4" | 197 | 1.7 | 4'- 4" | 65 | 0.8 |
| | 33" | 10'-10" | 4'- 8" | 6'- 4" | 7'- 3 3/4" | 216 | 2.0 | 4'- 8" | 71 | 0.9 |
| | 36" | 11'- 8 1/4" | 4'-11 1/2" | 6'-10" | 7'-10 3/4" | 241 | 2.2 | 5'- 1" | 81 | 1.0 |
| | 42" | 13'- 5 1/4" | 5'- 6 1/2" | 7'-10" | 9'- 0 1/2" | 290 | 2.8 | 5'-10" | 97 | 1.3 |
| | 48" | 15'- 9" | 6'- 1 1/2" | 9'- 4" | 10'- 9 1/4" | 350 | 3.8 | 6'- 7" | 117 | 1.7 |
| | 54" | 17'- 5 3/4" | 6'- 8 1/2" | 10'- 4" | 11'-11 1/4" | 415 | 4.5 | 7'- 6" | 151 | 2.1 |
| | 60" | 19'- 2 3/4" | 7'- 3 1/2" | 11'- 4" | 13'- 1" | 469 | 5.3 | 8'- 3" | 174 | 2.5 |
| | 66" | 20'-11 1/2" | 7'-10 1/2" | 12'- 4" | 14'- 3" | 530 | 6.2 | 8'- 9" | 194 | 2.9 |
| | 72" | 22'- 8 1/2" | 8'- 5 1/2" | 13'- 4" | 15'- 4 3/4" | 587 | 7.1 | 9'- 4" | 213 | 3.3 |
| 3:1 | 12" | 6'- 3" | 2'- 6" | 4'- 3" | 4'-11" | 114 | 0.8 | 1'- 9" | 22 | 0.2 |
| | 15" | 7'- 5" | 2'- 9 1/2" | 5'- 0" | 5'- 9 1/4" | 133 | 1.1 | 2'- 2" | 28 | 0.3 |
| | 18" | 8'- 6 3/4" | 3'- 1" | 5'- 9" | 6'- 7 3/4" | 166 | 1.3 | 2'- 8" | 37 | 0.5 |
| | 21" | 9'- 8 3/4" | 3'- 4 1/2" | 6'- 6" | 7'- 6" | 189 | 1.6 | 3'- 1" | 48 | 0.6 |
| | 24" | 11'- 0" | 3'- 9 1/2" | 7'- 3" | 8'- 4 1/2" | 221 | 2.0 | 3'- 7" | 58 | 0.7 |
| | 27" | 12'- 2" | 4'- 1" | 8'- 0" | 9'- 2 3/4" | 245 | 2.3 | 3'-11" | 67 | 0.8 |
| | 30" | 13'- 4" | 4'- 4 1/2" | 8'- 9" | 10'- 1 1/4" | 287 | 2.7 | 4'- 4" | 77 | 1.0 |
| | 33" | 14'- 5 3/4" | 4'- 8" | 9'- 6" | 10'-11 3/4" | 310 | 3.1 | 4'- 8" | 84 | 1.2 |
| | 36" | 15'- 7 3/4" | 4'-11 1/2" | 10'- 3" | 11'-10" | 343 | 3.5 | 5'- 1" | 96 | 1.4 |
| | 42" | 17'-11 1/2" | 5'- 6 1/2" | 11'- 9" | 13'- 6 3/4" | 424 | 4.5 | 5'-10" | 119 | 1.7 |
| | 48" | 21'- 1 3/4" | 6'- 1 1/2" | 14'- 0" | 16'- 2" | 527 | 6.1 | 6'- 7" | 146 | 2.3 |
| | 54" | 23'- 5 1/2" | 6'- 8 1/2" | 15'- 6" | 17'-10 3/4" | 618 | 7.3 | 7'- 6" | 186 | 2.9 |
| | 60" | 25'- 9 1/4" | 7'- 3 1/2" | 17'- 0" | 19'- 7 1/2" | 707 | 8.7 | 8'- 3" | 219 | 3.4 |
| | 66" | 28'- 1" | 7'-10 1/2" | 18'- 6" | 21'- 4 1/4" | 797 | 10.1 | 8'- 9" | 242 | 3.9 |
| | 72" | 30'- 4 3/4" | 8'- 5 1/2" | 20'- 0" | 23'- 1 1/4" | 910 | 11.7 | 9'- 4" | 272 | 4.4 |
| 4:1 | 12" | 7'-10 3/4" | 2'- 6" | 5'- 8" | 6'- 6 1/2" | 144 | 1.1 | 1'- 9" | 24 | 0.3 |
| | 15" | 9'- 4" | 2'- 9 1/2" | 6'- 8" | 7'- 8 1/2" | 177 | 1.5 | 2'- 2" | 32 | 0.4 |
| | 18" | 10'- 9 1/2" | 3'- 1" | 7'- 8" | 8'-10 1/4" | 217 | 1.9 | 2'- 8" | 42 | 0.5 |
| | 21" | 12'- 2 3/4" | 3'- 4 1/2" | 8'- 8" | 10'- 0" | 254 | 2.3 | 3'- 1" | 57 | 0.7 |
| | 24" | 13'- 9 1/2" | 3'- 9 1/2" | 9'- 8" | 11'- 2" | 295 | 2.8 | 3'- 7" | 67 | 0.9 |
| | 27" | 15'- 3" | 4'- 1" | 10'- 8" | 12'- 3 3/4" | 328 | 3.3 | 3'-11" | 77 | 1.0 |
| | 30" | 16'- 8 1/4" | 4'- 4 1/2" | 11'- 8" | 13'- 5 3/4" | 379 | 3.8 | 4'- 4" | 89 | 1.3 |
| | 33" | 18'- 1 3/4" | 4'- 8" | 12'- 8" | 14'- 7 1/2" | 417 | 4.5 | 4'- 8" | 101 | 1.4 |
| | 36" | 19'- 7" | 4'-11 1/2" | 13'- 8" | 15'- 9 1/4" | 464 | 5.1 | 5'-1" | 115 | 1.7 |
| | 42" | 22'- 5 3/4" | 5'- 6 1/2" | 15'- 8" | 18'- 1" | 575 | 6.5 | 5'-10" | 141 | 2.1 |
| | 48" | 26'- 6 1/4" | 6'- 1 1/2" | 18'- 8" | 21'- 6 3/4" | 720 | 8.9 | 6'- 7" | 175 | 2.8 |
| | 54" | 29'- 5" | 6'- 8 1/2" | 20'- 8" | 23'-10 1/4" | 863 | 10.7 | 7'- 6" | 226 | 3.6 |
| | 60" | 32'- 3 3/4" | 7'- 3 1/2" | 22'- 8" | 26'- 2" | 984 | 12.7 | 8'- 3" | 264 | 4.3 |
| | 66" | 35'- 2 1/2" | 7'-10 1/2" | 24'- 8" | 28'- 5 3/4" | 1126 | 14.9 | 8'- 9" | 300 | 4.9 |
| | 72" | 38'- 1 1/4" | 8'- 5 1/2" | 26'- 8" | 30'- 9 1/2" | 1283 | 17.3 | 9'- 4" | 334 | 5.6 |
| 6:1 | 12" | 11'- 2" | 2'- 6" | 8'- 6" | 9'- 9 3/4" | 220 | 1.9 | 1'- 9" | 28 | 0.4 |
| | 15" | 13'- 2 1/4" | 2'- 9 1/2" | 10'- 0" | 11'- 6 1/2" | 264 | 2.5 | 2'- 2" | 37 | 0.5 |
| | 18" | 15'- 2 1/2" | 3'- 1" | 11'- 6" | 13'- 3 1/4" | 326 | 3.2 | 2'- 8" | 50 | 0.7 |
| | 21" | 17'- 2 3/4" | 3'- 4 1/2" | 13'- 0" | 15'- 0 1/4" | 381 | 3.9 | 3'- 1" | 69 | 0.9 |
| | 24" | 19'- 4 1/2" | 3'- 9 1/2" | 14'- 6" | 16'- 9" | 447 | 4.8 | 3'- 7" | 80 | 1.2 |
| | 27" | 21'- 4 3/4" | 4'- 1" | 16'- 0" | 18'- 5 3/4" | 506 | 5.7 | 3'-11" | 96 | 1.4 |
| | 30" | 23'- 5 1/4" | 4'- 4 1/2" | 17'- 6" | 20'- 2 1/2" | 587 | 6.7 | 4'- 4" | 110 | 1.7 |
| | 33" | 25'- 5 1/2" | 4'- 8" | 19'- 0" | 21'-11 1/4" | 667 | 7.8 | 4'- 8" | 127 | 2.0 |
| | 36" | 27'- 5 3/4" | 4'-11 1/2" | 20'- 6" | 23'- 8" | 727 | 9.0 | 5'- 1" | 144 | 2.3 |
| | 42" | 31'- 6 1/4" | 5'- 6 1/2" | 23'- 6" | 27'- 1 1/2" | 914 | 11.5 | 5'-10" | 179 | 3.0 |
| | 48" | 37'- 3 1/2" | 6'- 1 1/2" | 28'- 0" | 32'- 4" | 1181 | 15.9 | 6'- 7" | 231 | 4.0 |
| | 54" | 41'- 4 1/4" | 6'- 8 1/2" | 31'- 0" | 35'- 9 1/2" | 1412 | 19.2 | 7'- 6" | 300 | 5.0 |
| | 60" | 45'- 4 3/4" | 7'- 3 1/2" | 34'- 0" | 39'- 3" | 1619 | 22.9 | 8'- 3" | 353 | 6.0 |

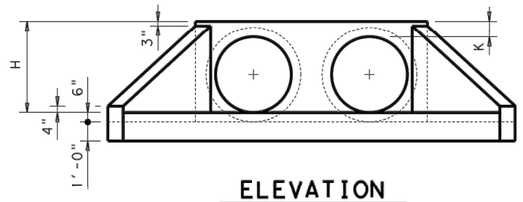


**ELEVATION**

Showing dimensions

1. Quantities shown are for concrete pipe and will increase slightly for metal pipe installations.
2. For vehicle safety, curbs shall project no more than 3" above finished grade. Curb heights shall be reduced, if necessary, to meet these requirements. No changes will be made in quantities and no additional compensation will be allowed for this work.
3. Provide a 1'-0" footing as shown where required to maintain 4" Min cover for pipes.
4. Quantities shown are for one structure end only (one headwall).
5. Min Length = 6" + 3" x $\left(\frac{12 \times H - 7}{12 \times L}\right)$

   Max Length = 12 x H - 3" x $\left(\frac{12 \times H - 7}{12 \times L}\right)$ - 1"
6. Lengths of wings based on SL:1 Slope along this line.

## TABLE OF REINFORCING STEEL (4)

| Bar | Size | Spa | No. |
|---|---|---|---|
| A | # 4 | 1'-0" | ~ |
| B | # 3 | 1'-6" | ~ |
| C | # 4 | 1'-0" | ~ |
| D | # 3 | 1'-0" | ~ |
| E | # 5 | ~ | 4 |
| F | # 5 | ~ | ~ |
| G | # 3 | ~ | 2 |
| S | # 4 | ~ | 6 |
| V | # 4 | 1'-0" | ~ |
| W | # 5 | ~ | 4 |
| | | | |

## TABLE OF CONSTANT DIMENSIONS

| DIA OF PIPE, D | G | K | H |
|---|---|---|---|
| 12" | 9" | 1'- 0" | 2'- 0" |
| 15" | 11" | 1'- 0" | 2'- 3" |
| 18" | 1'- 2" | 1'- 0" | 2'- 6" |
| 21" | 1'- 4" | 1'- 0" | 2'- 9" |
| 24" | 1'- 7" | 1'- 0" | 3'- 0" |
| 27" | 1'- 8" | 1'- 0" | 3'- 3" |
| 30" | 1'-10" | 1'- 0" | 3'- 6" |
| 33" | 1'-11" | 1'- 0" | 3'- 9" |
| 36" | 2'- 1" | 1'- 0" | 4'- 0" |
| 42" | 2'- 4" | 1'- 0" | 4'- 6" |
| 48" | 2'- 7" | 1'- 3" | 5'- 3" |
| 54" | 3'- 0" | 1'- 3" | 5'- 9" |
| 60" | 3'- 3" | 1'- 3" | 6'- 3" |
| 66" | 3'- 3" | 1'- 3" | 6'- 9" |
| 72" | 3'- 4" | 1'- 3" | 7'- 3" |

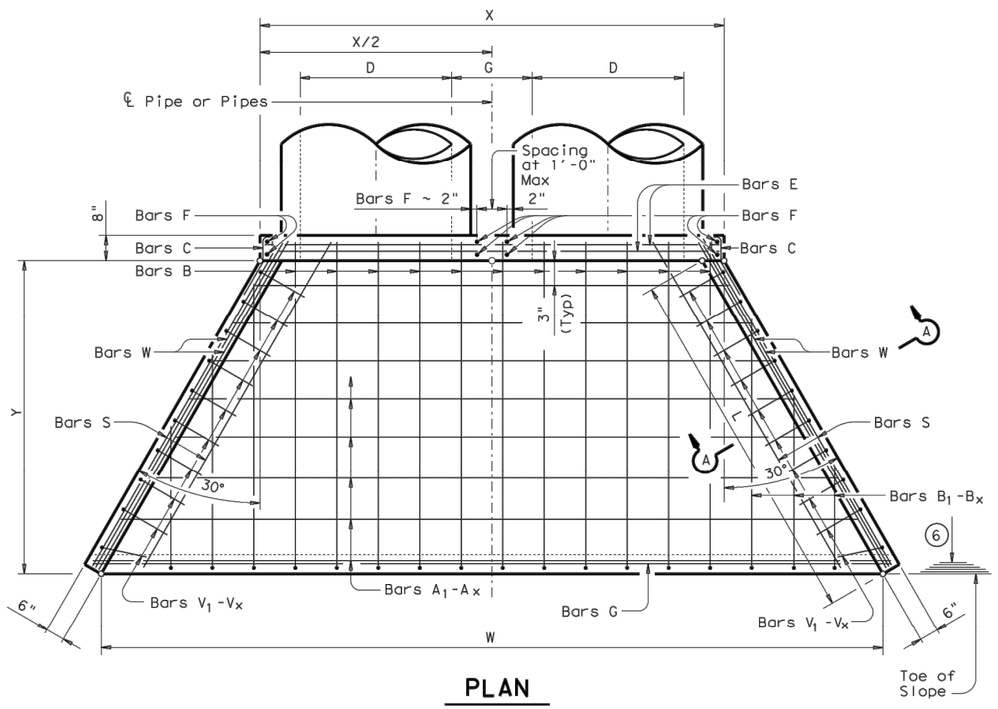


**PLAN**

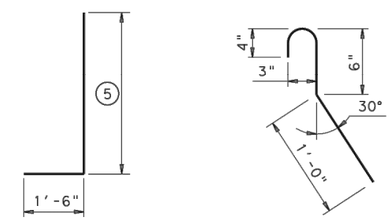


**BARS V** **BARS C** (2'-0" long)

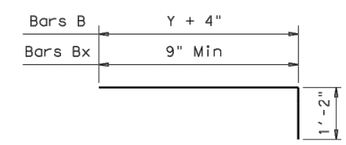


**BARS B & B1-Bx**

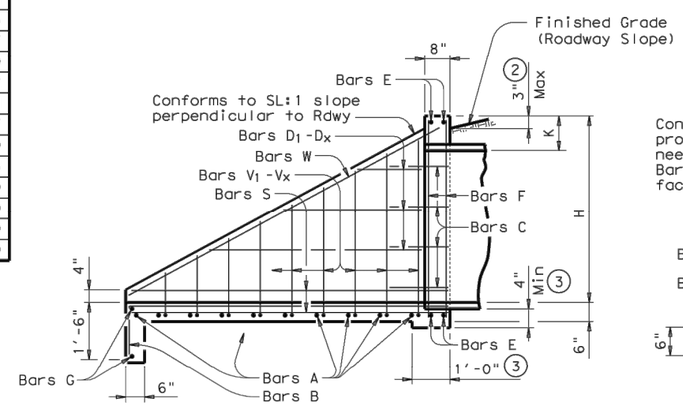


**TYPICAL WING ELEVATION**

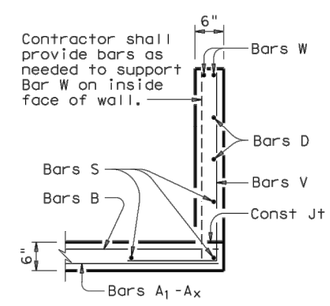


**SECTION A-A**

**GENERAL NOTES:**

Designed according to AASHTO LRFD Specifications.

Reinforcing steel shall be placed with the center of the outside layer of bars 2" from the surface of the concrete.

All reinforcing steel shall be Grade 60.

All concrete shall be Class "C" and shall have a minimum compressive strength of 3600 psi.

No bridge rails of any type may be mounted directly to these culvert headwalls.

Texas Department of Transportation — Bridge Division Standard

# CONCRETE HEADWALLS WITH FLARED WINGS FOR 0° SKEW PIPE CULVERTS

## CH-FW-0

| FILE: chfw00se.dgn | DN: TxDOT | CK: TxDOT | DW: TxDOT | CK: GAF |
|---|---|---|---|---|
| ©TxDOT February 2010 | CONT | SECT | JOB | HIGHWAY |
| REVISIONS | DIST | COUNTY | | SHEET NO. |
| | WACO | MCLENNAN | | 60 |

DISCLAIMER:
The use of this standard is governed by the "Texas Engineering Practice Act". No warranty of any kind is made by TxDOT for any purpose whatsoever. TxDOT assumes no responsibility for the conversion of this standard to other formats or for incorrect results or damages resulting from its use.

DATE:
FILE:

## TABLE OF DIMENSIONS & REINFORCING STEEL
(Wings for One Structure End)

| Dimensions | | | | | Variable Reinforcing | | | | Estimated Quantities per ft of wing length (2~Wings) (3) | |
|---|---|---|---|---|---|---|---|---|---|---|
| | | | | | Bars J1 | | Bars J2 | | | |
| Maximum Wingwall Height Hw | W | X | Y | Z | Size | Spa | Size | Spa | Reinf (Lb/Ft) | Conc (CY/Ft) |
| 2'-6" | 2'- 5" | 1'- 0" | 9" | 7" | #4 | 1'-0" | #4 | 1'-0" | 33.73 | 0.248 |
| 3'-0" | 2'- 5" | 1'- 0" | 9" | 7" | #4 | 1'-0" | #4 | 1'-0" | 37.07 | 0.261 |
| 3'-6" | 2'- 5" | 1'- 0" | 9" | 7" | #4 | 1'-0" | #4 | 1'-0" | 37.74 | 0.273 |
| 4'-0" | 2'- 5" | 1'- 0" | 9" | 7" | #4 | 1'-0" | #4 | 1'-0" | 38.41 | 0.285 |
| 4'-6" | 3'- 2" | 1'- 6" | 1'- 0" | 7" | #4 | 1'-0" | #4 | 1'-0" | 41.75 | 0.330 |
| 5'-0" | 3'- 2" | 1'- 6" | 1'- 0" | 7" | #4 | 1'-0" | #4 | 1'-0" | 45.09 | 0.343 |
| 5'-6" | 3'- 2" | 1'- 6" | 1'- 0" | 7" | #4 | 1'-0" | #4 | 1'-0" | 45.75 | 0.355 |
| 6'-0" | 3'- 2" | 1'- 6" | 1'- 0" | 7" | #4 | 1'-0" | #4 | 1'-0" | 46.42 | 0.367 |
| 7'-0" | 3'- 8" | 1'- 9" | 1'- 3" | 7" | #4 | 1'-0" | #4 | 1'-0" | 52.77 | 0.414 |
| 8'-0" | 4'- 2" | 2'- 0" | 1'- 6" | 8" | #5 | 1'-0" | #4 | 1'-0" | 60.19 | 0.486 |
| 9'-0" | 4'- 8" | 2'- 3" | 1'- 9" | 8" | #4 | 6" | #4 | 6" | 81.49 | 0.535 |
| 10'-0" | 5'- 2" | 2'- 6" | 2'- 0" | 8" | #5 | 6" | #4 | 6" | 97.25 | 0.584 |
| 11'-0" | 5'- 8" | 2'- 9" | 2'- 3" | 8" | #6 | 6" | #5 | 6" | 133.65 | 0.634 |
| 12'-0" | 6'- 2" | 3'- 0" | 2'- 6" | 9" | #7 | 6" | #5 | 6" | 162.29 | 0.721 |
| 13'-0" | 6'- 8" | 3'- 3" | 2'- 9" | 11" | #7 | 6" | #5 | 6" | 178.80 | 0.856 |
| 14'-0" | 7'- 2" | 3'- 6" | 3'- 0" | 1'- 0" | #8 | 6" | #5 | 6" | 216.78 | 0.959 |
| 15'-0" | 7'- 8" | 4'- 0" | 3'- 0" | 1'- 1" | #9 | 6" | #6 | 6" | 283.06 | 1.068 |
| 16'-0" | 8'- 2" | 4'- 6" | 3'- 0" | 1'- 3" | #9 | 6" | #6 | 6" | 297.02 | 1.234 |

## TABLE OF WINGWALL REINFORCING (2~Wings)

| Bar | Size | No. | Spa |
|---|---|---|---|
| DL | #5 | ~ | 1'-0" |
| DS | #5 | ~ | 1'-0" |
| E | #4 | ~ | 1'-0" |
| F | #4 | ~ | 1'-0" |
| G | #6 | 4 | ~ |
| M | #4 | 4 | ~ |
| P | #4 | ~ | 1'-0" |
| RS | #5 | 3 | ~ |
| RL | #5 | 3 | ~ |
| V | #4 | ~ | 1'-0" |

## TABLE OF ESTIMATED CULVERT TOEWALL QUANTITIES

| Bar | Size | No. | Spa |
|---|---|---|---|
| L | #4 | ~ | 1'-6" |
| Q | #4 | 1 | ~ |
| Reinf (Lb/Ft) | | | 2.45 |
| Conc (CY/Ft) | | | 0.037 |

## WING DIMENSION CALCULATIONS:

Formulas: (All values are in Feet)

Hw = H + T + C − 0.250'

A = (Hw − 0.333') (SL)

B = (A) [Tangent (θ + 15°)]

Lw = (A) ÷ [Cosine (θ + 15°)]

For Cast-in-place culverts:

Ltw = [(N) (S) + (N + 1) (U)] ÷ (Cosine θ)

For Precast culverts:

Ltw = [(N) (2U + S) + (N − 1) (0.500')] ÷ (Cosine θ)

Total Wingwall Area (Two Wings ~ S.F.) = (0.5) (Hw + 0.333') (Lw + A)

Hw = Height of Wingwall
SL:1 = Side Slope Ratio (Horizontal:1 Vertical)
A = Length of Short Wingwall
Lw = Length of Long Wingwall
Ltw = Culvert Toewall Length
N = Number of Culvert Spans
θ = Culvert Skew

See applicable box culvert standard for H, S, T, and U values.

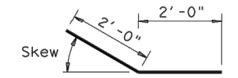


BARS DS
(Short Wing)

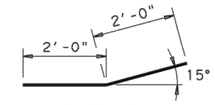


BARS DL
(Long Wing)

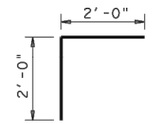


BARS RS
(Short Wing)

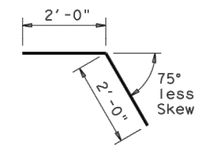


BARS RL
(Long Wing)

1. Extend Bars P 3'-0" minimum into bottom slab of Box Culvert.
2. Adjust to fit as necessary to maintain 1 ¼" clear cover and 4" minimum between bars.
3. Quantities shown are based on an average wing height for two wings (one structure end). To determine total quantities for two wings multiply the tabulated values by 0.5 x (A+Lw).
4. Recommended values of Slope are: 2:1, 3:1, 4:1, & 6:1.
5. When shown elsewhere on the plans, a 5" deep concrete riprap shall be constructed. Payment for riprap shall be as required by Item 432, "Riprap". Unless otherwise shown on the plans or directed by the Engineer, the riprap shall have a 6" wide by 1'-6" deep reinforced concrete toewall along all edges adjacent to natural ground; the toewall shall be reinforced by extending typical riprap reinforcing into the toewall; construction joints or grooved joints, oriented in the direction of flow, shall extend across the full distance of the riprap, at intervals of approximately 20'. When such riprap is provided, the culvert toewall shown in SECTION B-B will not be required.
6. At Contractor's option, Culvert Toewall may be ended flush with Wingwall Toewall. Adjust reinforcing from that shown as necessary.
7. Applicable values of of Skew are: 15°, 30°, and 45°.
8. Typical wingwall angle for all skews.
9. 0" min to 5'-0" max. Estimated curb heights are shown elsewhere in the plans. For structures with pedestrian rail, bicycle rail or curbs taller than 1'-0", refer to ECD standard. For structures with T6 bridge rail, refer to T6-CM standard. For structures with traffic rail, other than T6, refer to RAC standard.
10. For vehicle safety, curb heights and wall heights shall be reduced, if necessary, to provide a maximum 3" projection above finished grade. No changes will be made in quantities and no additional compensation will be allowed for this work.

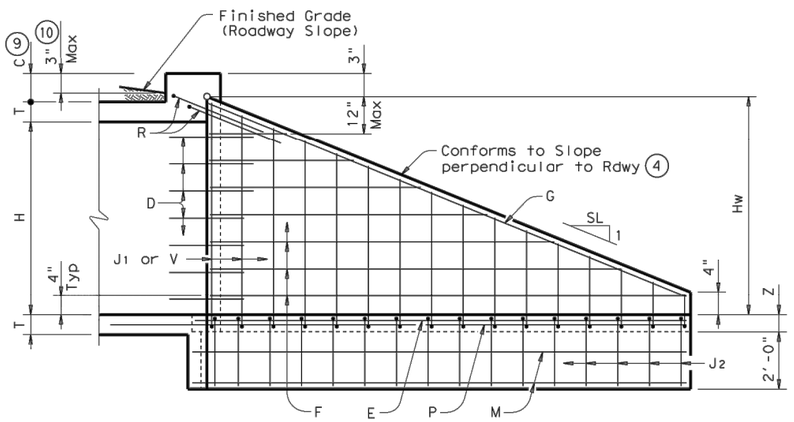


## INSIDE ELEVATION
(Showing reinforcing. Culvert and Culvert Toewall reinforcing not shown for clarity.)

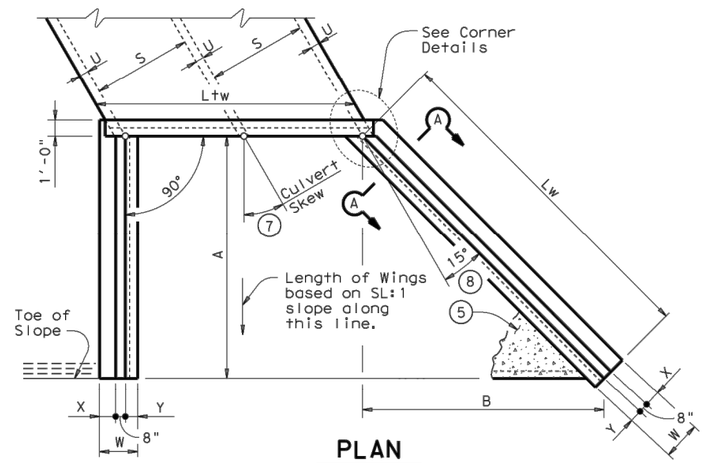


## PLAN
(Showing dimensions and 30° Skew.)

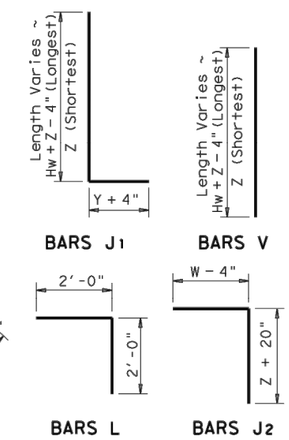


BARS J1 BARS V

BARS L BARS J2

## GENERAL NOTES:

Designed according to AASHTO LRFD Specifications.
All reinforcing steel shall be Grade 60.
Synthetic fibers listed on the "Fibers for Concrete" Material Producer List (MPL) may be used in lieu of steel reinforcing in riprap concrete unless noted otherwise.
All concrete shall be Class "C" and shall have a minimum compressive strength of 3600 psi.
All reinforcing bars shall be adjusted to provide a minimum of 1 ¼" clear cover.
When structure is founded on solid rock, depth of toewalls for culverts and wingwalls may be reduced or eliminated as directed by the Engineer.
See BCS sheet for additional dimensions and information.
The quantities for concrete and reinforcing steel resulting from the formulas given on this sheet are for Contractor's information only.

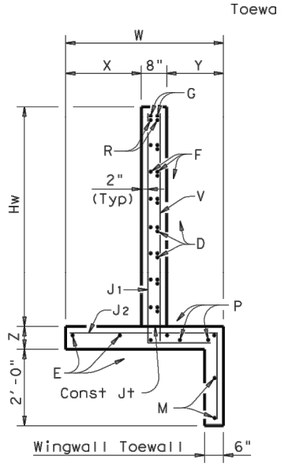


## SECTION A-A

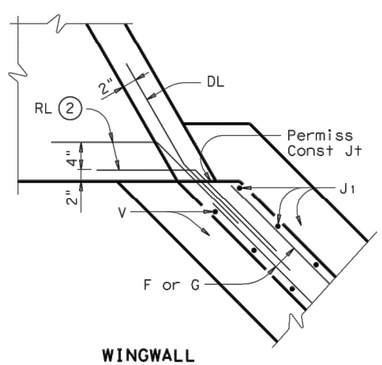


WINGWALL

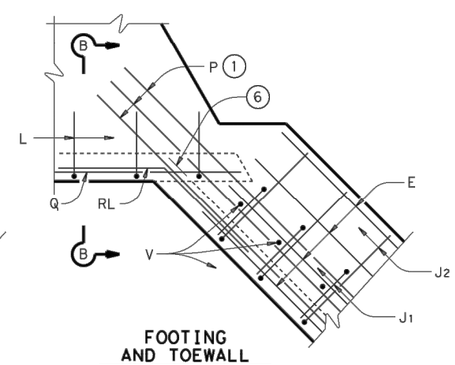


FOOTING AND TOEWALL

## CORNER DETAILS
(Culvert and Culvert Toewall reinforcing not shown for clarity.)

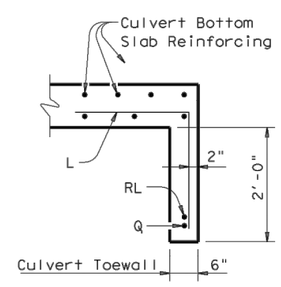


## SECTION B-B (5)

Texas Department of Transportation — Bridge Division Standard

# CONCRETE WINGWALLS WITH FLARED WINGS FOR SKEWED BOX CULVERTS

FW-S

| FILE: fw-sstde.dgn | DN: GAF | CK: CAT | DW: TxDOT | CK: GAF |
|---|---|---|---|---|
| ©TxDOT February 2010 | CONT | SECT | JOB | HIGHWAY |
| REVISIONS | | | | |
| 11-10: Add note for synthetic fibers. | DIST | COUNTY | | SHEET NO. |
| | WACO | MCLENNAN | | 61 |

DISCLAIMER:
The use of this standard is governed by the "Texas Engineering Practice Act". No warranty of any kind is made by TxDOT for any purpose whatsoever. TxDOT assumes no responsibility for the conversion of this standard to other formats or for incorrect results or damages resulting from its use.

DATE:
FILE:

DISCLAIMER: The use of this standard is governed by the "Texas Engineering Practice Act". No warranty of any kind is made by TxDOT for any purpose. TxDOT assumes no responsibility for the conversion of this standard to other formats or for incorrect results or damages resulting from its use.

## SIGN SUPPORT DESCRIPTIVE CODES

(Descriptive Codes correspond to project estimate and quantities sheets)

SM RD SGN ASSM TY XXXXX(X)XX(X-XXXX)

**Post Type**

FRP = Fiberglass Reinforced Plastic Pipe (see SMD(FRP))
TWT = Thin-Walled Tubing (see SMD(TWT))
10BWG = 10 BWG Tubing (see SMD(SLIP-1) to (SLIP-3))
S80 = Schedule 80 Pipe (see SMD(SLIP-1) to (SLIP-3))

**Number of Posts (1 or 2)**

**Anchor Type**

UA = Universal Anchor - Concreted (see SMD(FRP) and (TWT))
UB = Universal Anchor - Bolted down (see SMD(FRP) and (TWT))
WS = Wedge Anchor Steel - (see SMD(TWT))
WP = Wedge Anchor Plastic (see SMD(TWT))
SA = Slipbase - Concreted (see SMD(SLIP-1) to (SLIP-3))
SB = Slipbase - Bolted Down (see SMD(SLIP-1) to (SLIP-3))

**Sign Mounting Designation**

P = Prefab. "Plain" (see SMD(SLIP-1) to (SLIP-3), (TWT), (FRP))
T = Prefab. "T" (see SMD(SLIP-1) to (SLIP-3), (TWT))
U = Prefab. "U" (see SMD(SLIP-1) to (SLIP-3))
IF REQUIRED
1EXT or 2EXT = Number of Extensions (see SMD(SLIP-1) to (SLIP-3), (TWT))
BM = Extruded Wind Beam (see SMD(SLIP-1) to (SLIP-3))
WC = 1.12 #/ft Wing Channel (see SMD(SLIP-1) to (SLIP-3))
EXAL = Extruded Aluminum Sign Panels (see SMD(SLIP-3))

## REQUIRED CLEARANCE FOR BREAKAWAY SUPPORT

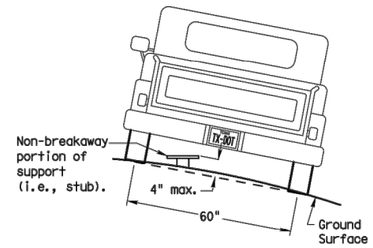


To avoid vehicle undercarriage snagging, any substantial remains of a breakaway support, when it is broken away, should not project more than 4 inches above a 60-inch chord (i.e., typical space between wheel paths).

## SIGN LOCATION

### PAVED SHOULDERS

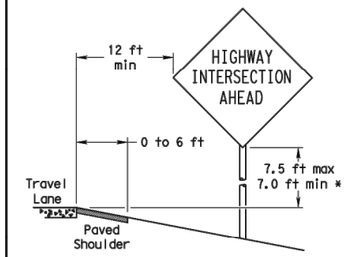


**LESS THAN 6 FT. WIDE**

When the shoulder is 6 ft. or less in width, the sign must be placed at least 12 ft. from the edge of the travel lane.

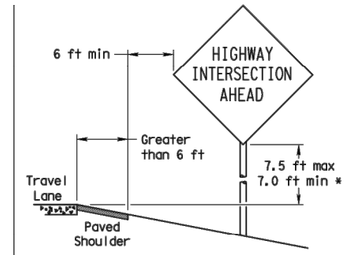


**GREATER THAN 6 FT. WIDE**

When the shoulder is greater than 6 ft in width, the sign must be placed at least 6 ft. from the edge of the shoulder.

### T-INTERSECTION

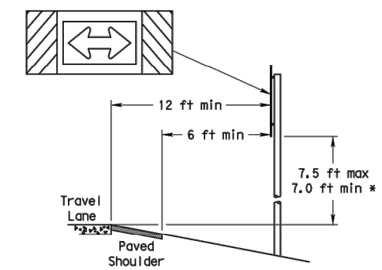


When this sign is needed at the end of a two-lane, two way roadway, the right edge of the sign should be in line with the centerline of the roadway. Place as close to ROW as practical.

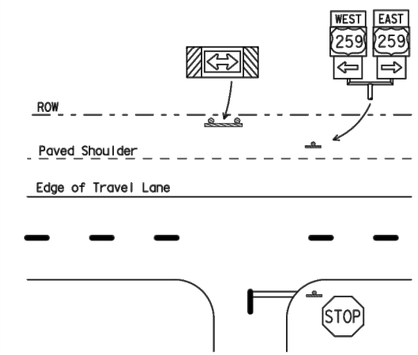


### BEHIND BARRIER

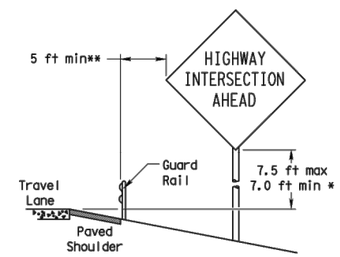


**BEHIND GUARDRAIL**

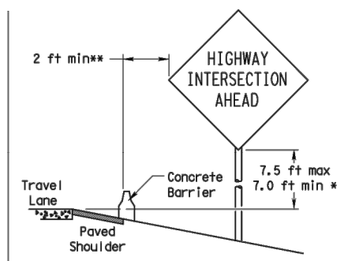


**BEHIND CONCRETE BARRIER**

**Sign clearance based on distance required for proper guard rail or concrete barrier performance.

* Signs shall be mounted using the following condition that results in the greatest sign elevation:

(1) a minimum of 7 to a maximum of 7.5 feet above the edge of the travel lane or

(2) a minimum of 7 to a maximum of 7.5 feet above the grade at the base of the support when sign is installed on the backslope.

The maximum values may be increased when directed by the Engineer.

See the Traffic Operations Division website for detailed drawings of sign clamps, Triangular Slipbase System components and Wedge Anchor System components.

The website address is:
http://www.txdot.gov/publications/traffic.htm

No more than 2 sign posts should be located within a 7 ft. circle.

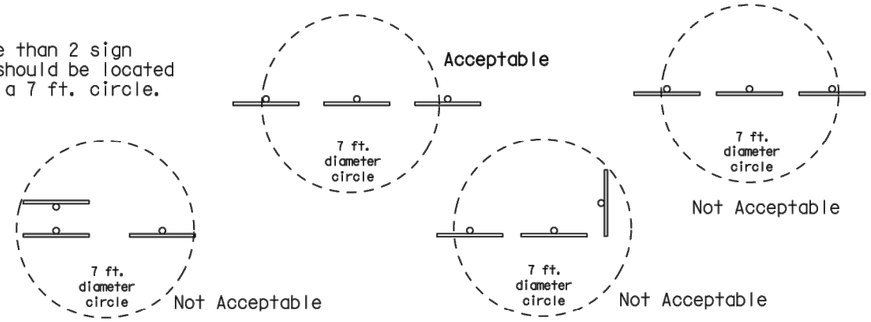


## TYPICAL SIGN ATTACHMENT DETAIL

### Single Signs

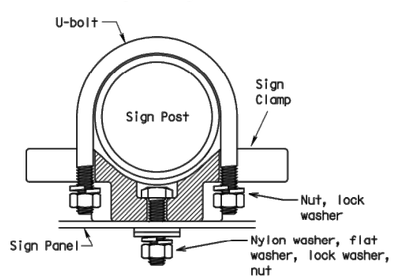


Bolts used to mount sign panels to the clamp are 5/16-18 UNC galvanized square head with nut, nylon washer, flat washer and lock washer. The bolt length is 1 inch for aluminum.

When two sign clamps are used to mount signs back-to-back, use a 5/16-18 UNC galvanized hex head per ASTM A307 with nut and helical-spring lock washer. The approximate bolt lengths for various post sizes and sign clamp types are given in the table at right. The bolt length may need to be adjusted depending upon field conditions.

Sign clamps may be either the specific size clamp or the universal clamp.

### Back-to-Back Signs

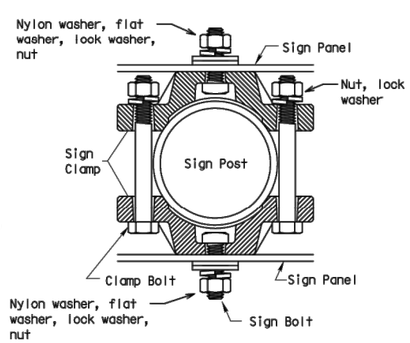


| Pipe Diameter | Approximate Bolt Length | |
|---|---|---|
| | Specific Clamp | Universal Clamp |
| 2" nominal | 3" | 3 or 3 1/2" |
| 2 1/2" nominal | 3 or 3 1/2" | 3 1/2 or 4" |
| 3" nominal | 3 1/2 or 4" | 4 1/2" |

### SIGNS WITH PLAQUES

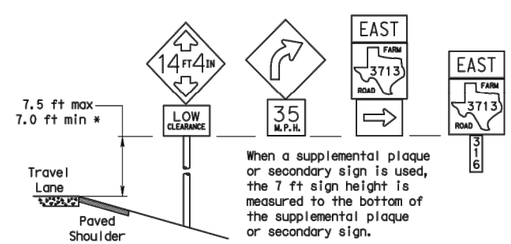


When a supplemental plaque or secondary sign is used, the 7 ft sign height is measured to the bottom of the supplemental plaque or secondary sign.

### CURB & GUTTER OR RAISED ISLAND

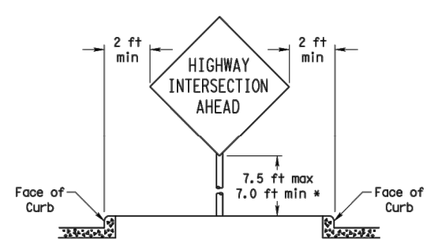


### RESTRICTED RIGHT-OF-WAY

(When 6 ft min. is not possible.)

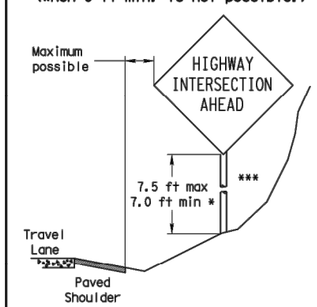


Right-of-way restrictions may be created by rocks, water, vegetation, forest, buildings, a narrow island, or other factors.

In situations where a lateral restriction prevents the minimum horizontal clearance from the edge of the travel lane, signs should be placed as far from the travel lane as practical.

*** Post may be shorter if protected by guardrail or if Engineer determines the post could not be hit due to extreme slope.

Texas Department of Transportation
Traffic Operations Division

# SIGN MOUNTING DETAILS SMALL ROADSIDE SIGNS GENERAL NOTES & DETAILS

SMD(GEN)-08

©TxDOT July 2002

| FILE: TXDOT | CK: TXDOT | DW: TXDOT | CK: TXDOT |
|---|---|---|---|
| 9-08 REVISIONS | CONT | SECT | JOB | HIGHWAY |
| DIST | COUNTY | | SHEET NO. |
| WACO | MCLENNAN | | 62 |

26A

DATE:
FILE:

DISCLAIMER: The use of this standard is governed by the "Texas Engineering Practice Act". No warranty of any kind is made by TxDOT for any purpose whatsoever. TxDOT assumes no responsibility for the conversion of this standard to other formats or for incorrect results or damages resulting from its use.

# TRIANGULAR SLIPBASE INSTALLATION GENERAL REQUIREMENTS

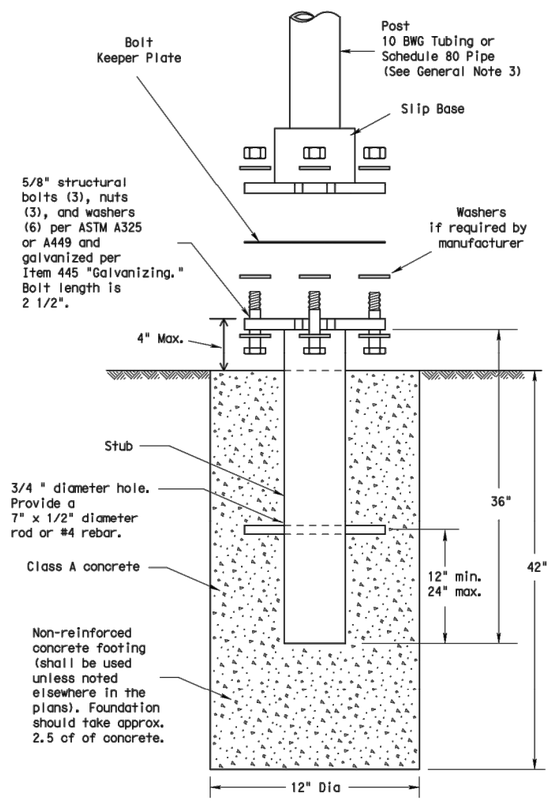


SM RD SGN ASSM TY XXXXX(X)SA(X-XXXX)

NOTE

There are various devices approved for the Triangular Slipbase System. Please reference the Material Producer List for approved slip base systems. http://www.txdot.gov/business/producer_list.htm The devices shall be installed per manufacturers' recommendations. Installation procedures shall be provided to the Engineer by Contractor.

GENERAL NOTES:

1. Slip base shall be permanently marked to indicate manufacturer. Method, design, and location of marking are subject to approval of the TxDOT Traffic Standards Engineer.
2. Material used as post with this system shall conform to the following specifications:
   10 BWG Tubing (2.875" outside diameter)
   - 0.134" nominal wall thickness
   - Seamless or electric-resistance welded steel tubing or pipe
   - Steel shall be HSLAS Gr 55 per ASTM A1011 or ASTM A1008
   - Other steels may be used if they meet the following:
     - 55,000 PSI minimum yield strength
     - 70,000 PSI minimum tensile strength
     - 20% minimum elongation in 2"
   - Wall thickness (uncoated) shall be within the range of 0.122" to 0.138"
   - Outside diameter (uncoated) shall be within the range of 2.867" to 2.883"
   - Galvanization per ASTM A123 or ASTM A653 G210. For precoated steel tubing (ASTM A653), recoat tube outside diameter weld seam by metallizing with zinc wire per ASTM B833.

   Schedule 80 Pipe (2.875" outside diameter)
   - 0.276" nominal wall thickness
   - Steel tubing per ASTM A500 Gr C
   - Other seamless or electric-resistance welded steel tubing or pipe with equivalent outside diameter and wall thickness may be used if they meet the following:
     - 46,000 PSI minimum yield strength
     - 62,000 PSI minimum tensile strength
     - 21% minimum elongation in 2"
   - Wall thickness (uncoated) shall be within the range of 0.248" to 0.304"
   - Outside diameter (uncoated) shall be within the range of 2.855" to 2.895"
   - Galvanization per ASTM A123
3. See the Traffic Operations Division website for detailed drawings of sign clamps and Texas Universal Triangular Slipbase System components. The website address is:
   http://www.txdot.gov/publications/traffic.htm
4. Sign supports shall not be spliced except where shown. Sign support posts shall not be spliced.

ASSEMBLY PROCEDURE

Foundation

1. Prepare 12-inch diameter by 42-inch deep hole. If solid rock is encountered, the depth of the foundation may be reduced such that it is embedded a minimum of 18 inches into the solid rock.
2. The Engineer may permit batches of concrete less than 2 cubic yards to be mixed with a portable, motor-driven concrete mixer. For small placements less than 0.5 cubic yards, hand mixing in a suitable container may be allowed by Engineer. Concrete shall be Class A.
3. Push the pipe end of the slip base stub into the center of the concrete. Rotate the stub back and forth while pushing it down into the concrete to assure good contact between the concrete and stub. Continue to work the stub into the concrete until it is between 2 to 4 inches above the ground.
4. Plumb the stub. Allow a minimum of 4 days to set, unless otherwise directed by the Engineer.
5. The triangular slipbase system is multidirectional and is designed to release when struck from any direction.

Support

1. Cut support so that the bottom of the sign will be 7 to 7.5 feet above the edge of the travelway (i.e., edge of the closest lane) when slip plate is below the edge of pavement or 7 to 7.5 feet above slip plate when the slip plate is above the edge of the travelway. The cut shall be plumb and straight.
2. Attach sign to support using connections shown. When multiple signs are installed on the same support, ensure the minimum clearance between each sign is maintained. See SMD(SLIP-2) for clearances based on sign types.

## CONCRETE ANCHOR

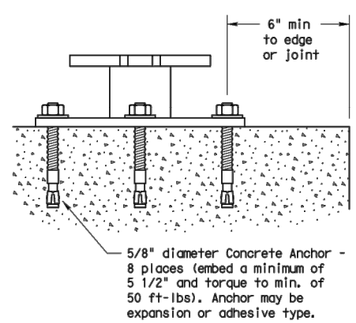


SM RD SGN ASSM TY XXXXX(X)SB(X-XXXX)

Concrete anchor consists of 5/8" diameter stud bolt with UNC series bolt threads on the upper end. Heavy hex nut per ASTM A563, and hardened washer per ASTM F436. The stud bolt shall have a minimum yield and ultimate tensile strength of 50 and 75 KSI, respectively. Nuts, bolts and washers shall be galvanized per Item 445, "Galvanizing." Adhesive type anchors shall have stud bolts installed with Type III epoxy per DMS-6100, "Epoxies and Adhesives." Adhesive anchors may be loaded after adequate epoxy cure time per the manufacturer's recommendations. Top of bolt shall extend at least flush with top of the nut when installed. The anchor, when installed in 4000 psi normal-weight concrete with a 5 1/2" minimum embedment, shall have a minimum allowable tension and shear of 3900 and 3100 psi, respectively.

Texas Department of Transportation
Traffic Operations Division

SIGN MOUNTING DETAILS
SMALL ROADSIDE SIGNS
TRIANGULAR SLIPBASE SYSTEM

SMD(SLIP-1)-08

| | | | | |
|---|---|---|---|---|
| ©TxDOT July 2002 | DN: TXDOT | CK: TXDOT | DW: TXDOT | CK: TXDOT |
| 9-08 REVISIONS | CONT | SECT | JOB | HIGHWAY |
| | DIST | COUNTY | | SHEET NO. |
| | WACO | MCLENNAN | | 63 |

DATE:
FILE:

26B

DISCLAIMER: The use of this standard is governed by the "Texas Engineering Practice Act". No warranty of any kind is made by TxDOT for any purpose whatsoever. TxDOT assumes no responsibility for the conversion of this standard to other formats or for incorrect results or damages resulting from its use.

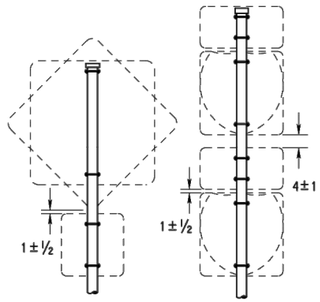


SM RD SGN ASSM TY XXXXX(1)XX(P)

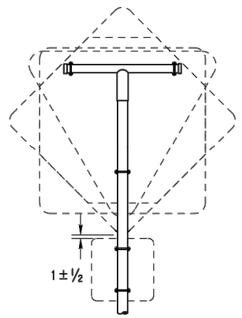


SM RD SGN ASSM TY XXXXX(1)XX(T)

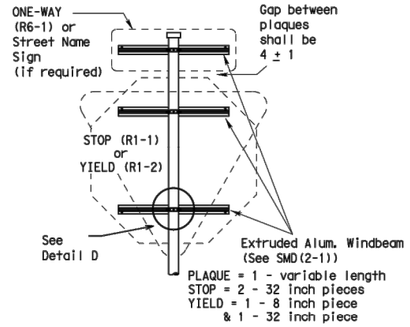


SM RD SGN ASSM TY XXXXX(1)XX(P-BM)

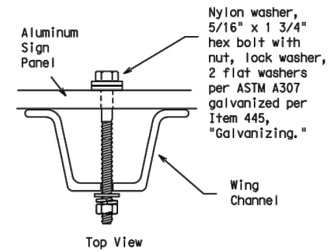


Detail A

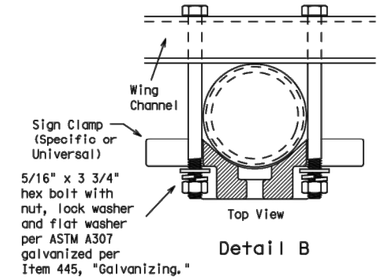


Detail B

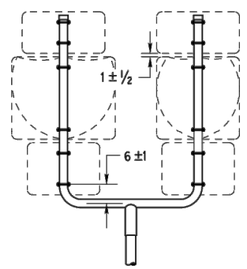


SM RD SGN ASSM TY XXXXX(1)XX(U)

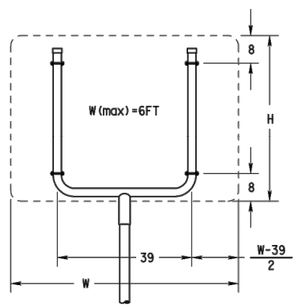


SM RD SGN ASSM TY XXXXX(1)XX(U)

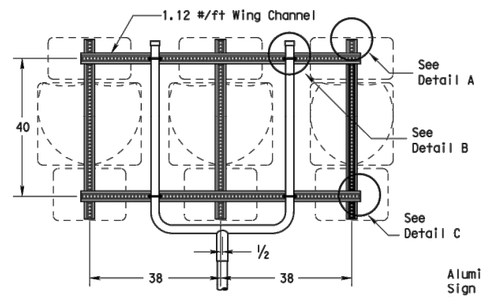


SM RD SGN ASSM TY XXXXX(1)XX(U-WC)
(See Note 11)

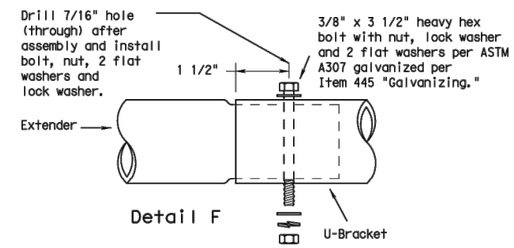


Detail F

Splices shall only be allowed behind the sign substrate.

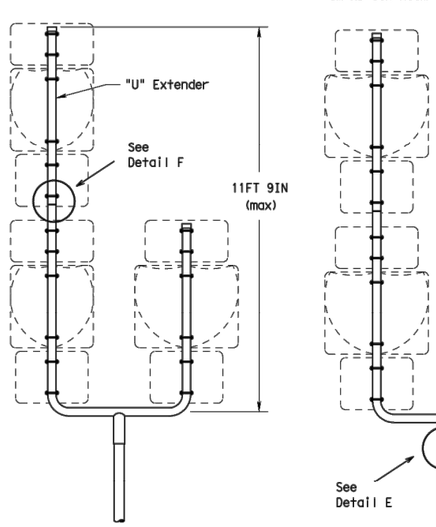


SM RD SGN ASSM TY S80(1)XX(U-1EXT)

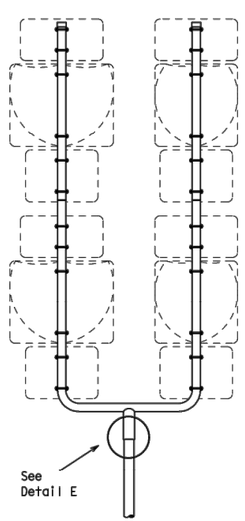


SM RD SGN ASSM TY S80(1)XX(U-2EXT)

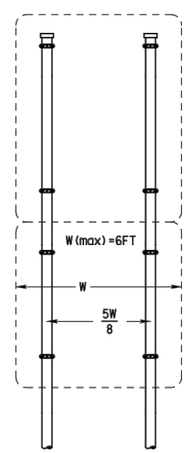


SM RD SGN ASSYM TY XXXXX(2)XX(P)

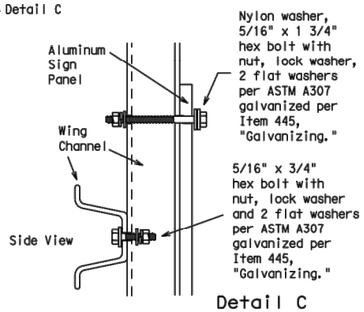


SIDE VIEW

Detail C

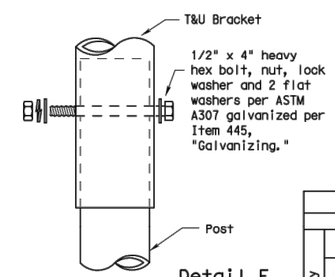


Detail E

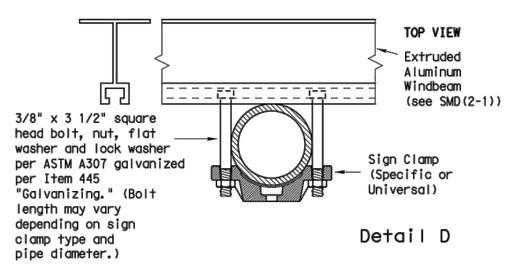


Detail D

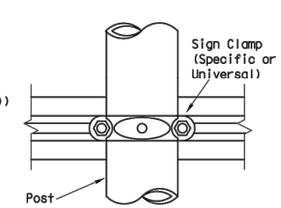


## GENERAL NOTES:

1.

| SIGN SUPPORT | # OF POSTS | MAX. SIGN AREA |
|---|---|---|
| 10 BWG | 1 | 16 SF |
| 10 BWG | 2 | 32 SF |
| Sch 80 | 1 | 32 SF |
| Sch 80 | 2 | 64 SF |

2. The Engineer may require that a Schedule 80 post be used in place of a 10 BWG where a sign height is abnormally high due to a fill slope.
3. Sign supports shall not be spliced except where shown. Sign support posts shall not be spliced.
4. Aluminum sign blanks shall conform to Departmental Material Specifications DMS-7110 and shall have the following minimum thicknesses: 0.080 for signs less than 7.5 sq. ft., 0.100 for signs 7.5 to 15 sq. ft., and 0.125 for signs greater than 15 sq. ft.
5. Signs that require specific supports due to reasons in addition to windloading are indicated on the "REQUIRED SUPPORT" table on this sheet.
6. For horizontal rectangular signs fabricated from flat aluminum, T-brackets are used for signs 24 inches or less in height. U-brackets are used for signs of greater height.
7. When two triangular slipbase supports are used to support a single sign, they shall not be "rigidly" connected to each other except through the sign panel. This will allow each support to act independently when impacted by an errant vehicle.
8. Wing channel shall meet ASTM A 1011 SS Gr 50 and be galvanized per ASTM A 123.
9. Excess pipe, wing channel, or windbeam shall be cut off so that it does not extend beyond the sign panel (i.e., excess support shall not be visible when the sign is viewed from the front.) Repair galvanized coating at cut support ends per Item 445, "Galvanizing."
10. Additional route markers may be added vertically, provided the total sign area does not exceed the maximum allowable amount per Note 1.
11. Additional sign clamp required on the "T-bracket" post for 24 inch height signs. Place the clamp 3 inches above bottom of sign when possible.
12. Post open ends shall be fitted with Friction Caps.
13. Sign blanks shall be the sizes and shapes shown on the plans.

## REQUIRED SUPPORT

| | SIGN DESCRIPTION | SUPPORT |
|---|---|---|
| Regulatory | 48-inch STOP sign (R1-1) | TY 10BWG(1)XX(T)<br>TY 10BWG(1)XX(P-BM) |
| | 60-inch YIELD sign (R1-2) | TY 10BWG(1)XX(T)<br>TY 10BWG(1)XX(P-BM) |
| | 48x16-inch ONE-WAY sign (R6-1) | TY 10BWG(1)XX(T)<br>TY 10BWG(1)XX(P-BM) |
| | 36x48, 48x36, and 48x48-inch signs | TY 10BWG(1)XX(T) |
| | 48x60-inch signs | TY S80(1)XX(T) |
| Warning | 48x48-inch signs (diamond or square) | TY 10BWG(1)XX(T) |
| | 48x60-inch signs | TY S80(1)XX(T) |
| | 48-inch Advance School X-ing sign (S1-1) | TY 10BWG(1)XX(T) |
| | 48-inch School X-ing sign (S2-1) | TY 10BWG(1)XX(T) |
| | Large Arrow sign (W1-6 & W1-7) | TY 10BWG(1)XX(T) |

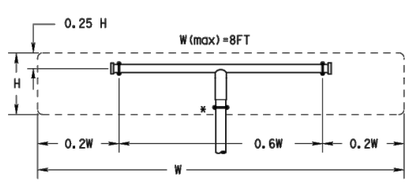


All dimensions are in english unless detailed otherwise.

SM RD SGN ASSM TY XXXXX(1)XX(T)
(* - See Note 12)

## FRICTION CAP DETAIL

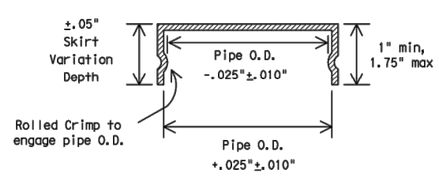


Friction caps may be manufactured from hot rolled or cold rolled steel sheets. The minimum sheet metal thickness shall be 24 gauge for all cap sizes.

The rim edges shall be reasonably straight and smooth. Caps shall be sized and formed in such a manner as to produce a drive-on friction fit and have no tendency to rock when seated on the pipe. The depth shall be sufficient to give positive protection against entrance of rainwater. They shall be free of sharp creases or indentations and show no evidence of metal fracture.

Caps shall have an electrodeposited coating of zinc in accordance with the requirements of ASTM B633 Class FE/ZN 8.

Texas Department of Transportation
Traffic Operations Division

# SIGN MOUNTING DETAILS SMALL ROADSIDE SIGNS TRIANGULAR SLIPBASE SYSTEM

SMD(SLIP-2)-08

©TxDOT July 2002

| DN: TXDOT | CK: TXDOT | DW: TXDOT | CK: TXDOT |
|---|---|---|---|
| CONT | SECT | JOB | HIGHWAY |
| DIST | COUNTY | | SHEET NO. |
| WACO | MCLENNAN | | 64 |

9-08 REVISIONS

DATE:
FILE:

DISCLAIMER: The use of this standard is governed by the "Texas Engineering Practice Act". No warranty of any kind is made by TxDOT for any purpose whatsoever. TxDOT assumes no responsibility for the conversion of this standard to other formats or for incorrect results or damages resulting from its use.

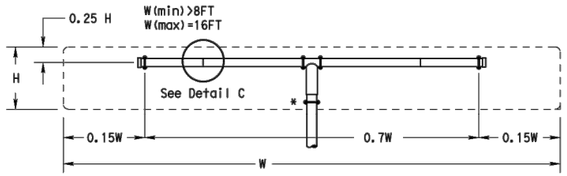


SM RD SGN ASSM TY XXXXX(1)XX(T-2EXT)
(* - See Note 12)

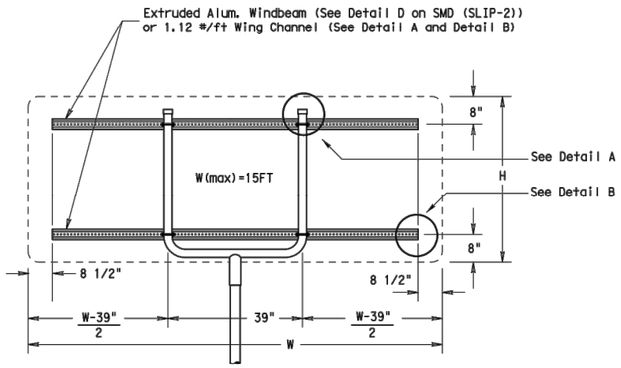


SM RD SGN ASSM TY XXXXX(1)XX(U-XX)

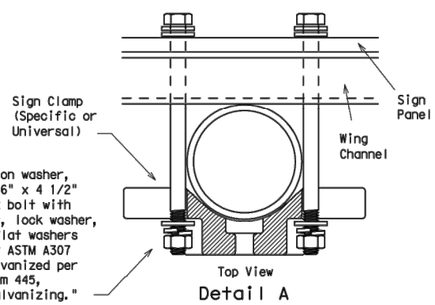


Detail A

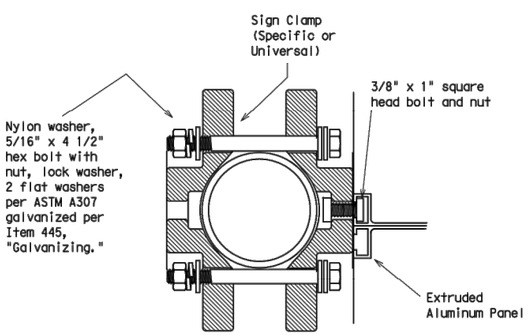


Detail D
EXTRUDED ALUMINUM SIGN WITH T BRACKET

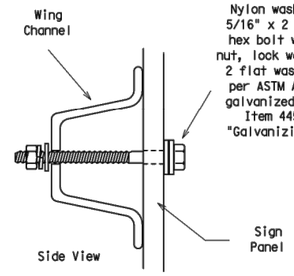


Detail B

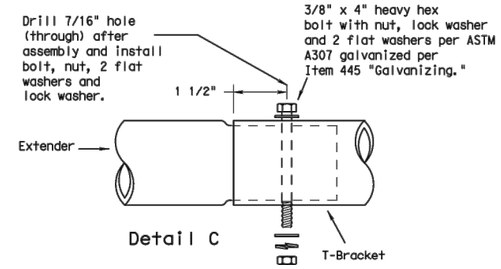


Detail C

Splices shall only be allowed behind the sign substrate.

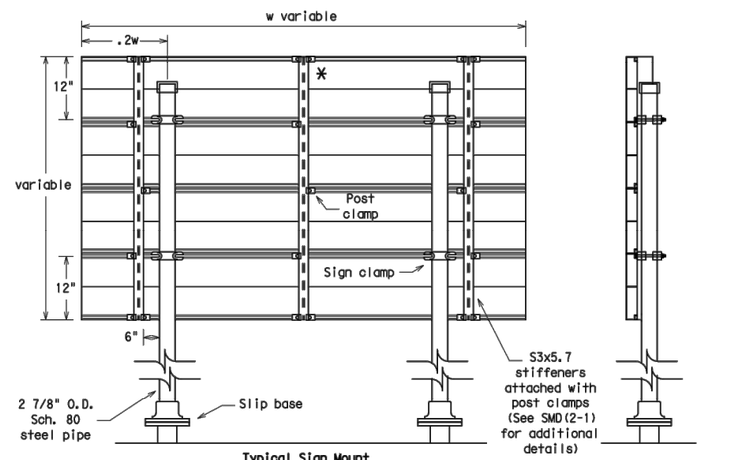


Typical Sign Mount
SM RD SGN ASSM TY S80(2)XX(P-EXAL)

* Additional stiffener placed at approximate center of signs when sign width is greater than 10'.

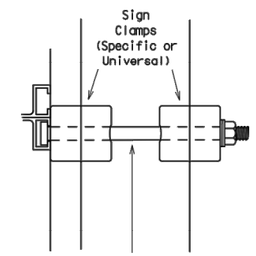


3/8" x 4 1/2"
square head
bolt, nut,
flat washer
and lock washer per
ASTM A307 galvanized
per Item 445,
"Galvanizing."

Detail E

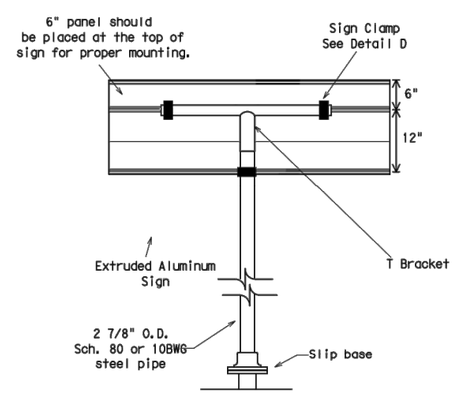


Extruded Aluminum Sign
With T Bracket

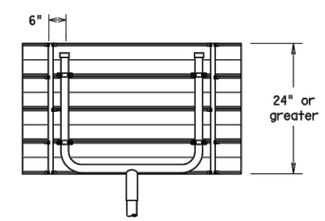


Use Extruded Alum. Windbeam as stiffeners
See SMD (2-1) for additional details

See Detail E
for clamp installation

**GENERAL NOTES:**

1.

| SIGN SUPPORT | # OF POSTS | MAX. SIGN AREA |
|---|---|---|
| 10 BWG | 1 | 16 SF |
| 10 BWG | 2 | 32 SF |
| Sch 80 | 1 | 32 SF |
| Sch 80 | 2 | 64 SF |

2. The Engineer may require that a Schedule 80 post be used in place of a 10 BWG where a sign height is abnormally high due to a fill slope.
3. Sign supports shall not be spliced except where shown. Sign support posts shall not be spliced.
4. Aluminum sign blanks shall conform to Departmental Material Specifications DMS-7110 and shall have the following minimum thicknesses: 0.080 for signs less than 7.5 sq. ft., 0.100 for signs 7.5 to 15 sq. ft., and 0.125 for signs greater than 15 sq. ft.
5. Signs that require specific supports due to reasons in addition to windloading are indicated on the "REQUIRED SUPPORT" table on this sheet.
6. For horizontal rectangular signs fabricated from flat aluminum, T-brackets are used for signs 24 inches or less in height. U-brackets are used for signs of greater height.
7. When two triangular slipbase supports are used to support a single sign, they shall not be "rigidly" connected to each other except through the sign panel. This will allow each support to act independently when impacted by an errant vehicle.
8. Wing channel shall meet ASTM A 1011 SS Gr 50 and be galvanized per ASTM A 123.
9. Excess pipe, wing channel, or windbeam shall be cut off so that it does not extend beyond the sign panel (i.e., excess support shall not be visible when the sign is viewed from the front.) Repair galvanized coating at cut support ends per Item 445, "Galvanizing."
10. Sign blanks shall be the sizes and shapes shown on the plans.
11. Additional sign clamp required on the "T-bracket" post for 24 inch high signs. Place the clamp 3 inches above bottom of sign when possible.
12. Post open ends shall be fitted with Friction Caps.

REQUIRED SUPPORT

| | SIGN DESCRIPTION | SUPPORT |
|---|---|---|
| Regulatory | 48-inch STOP sign (R1-1) | TY 10BWG(1)XX(T)<br>TY 10BWG(1)XX(P-BM) |
| | 60-inch YIELD sign (R1-2) | TY 10BWG(1)XX(T)<br>TY 10BWG(1)XX(P-BM) |
| | 48x16-inch ONE-WAY sign (R6-1) | TY 10BWG(1)XX(T)<br>TY 10BWG(1)XX(P-BM) |
| | 36x48, 48x36, and 48x48-inch signs | TY 10BWG(1)XX(T) |
| | 48x60-inch signs | TY S80(1)XX(T) |
| Warning | 48x48-inch signs (diamond or square) | TY 10BWG(1)XX(T) |
| | 48x60-inch signs | TY S80(1)XX(T) |
| | 48-inch Advance School X-ing sign (S1-1) | TY 10BWG(1)XX(T) |
| | 48-inch School X-ing sign (S2-1) | TY 10BWG(1)XX(T) |
| | Large Arrow sign (W1-6 & W1-7) | TY 10BWG(1)XX(T) |

Texas Department of Transportation
Traffic Operations Division

# SIGN MOUNTING DETAILS
# SMALL ROADSIDE SIGNS
# TRIANGULAR SLIPBASE SYSTEM

SMD(SLIP-3)-08

©TxDOT July 2002

| DN: TXDOT | CK: TXDOT | DW: TXDOT | CK: TXDOT |
|---|---|---|---|
| CONT | SECT | JOB | HIGHWAY |
| DIST | COUNTY | | SHEET NO. |
| WACO | MCLENNAN | | 65 |

9-08 REVISIONS

26D

DATE:
FILE:

# BEST MANAGEMENT PRACTICE (BMP) GENERAL NOTES

1. Prior to TxDOT allowing the Contractor to start construction, the Contractor will provide the required storm water and 404 permit documentation and support activities, including but not limited to the following:

   - Provide a list of all chemicals, construction and waste products that will be generated, stored or brought upon TxDOT ROW. The list includes expected construction debris, sanitary wastes, construction chemicals and petroleum products used or generated by the Contractor and sub-contractors. Along with the list, the Contractor will supply a spill prevention plan and clean up procedures that will include each of these chemical products or generated waste.

   - Provide in the construction schedule the necessary line items that will comply with the schedule and planning requirements of the storm water permit.

   - Post the TxDOT storm water permit and any Contractor permits, per permit requirements.

   - Provide copies of storm water permits for Contractor PSL(s). As new PSL(s) may be obtained for the project, provide copies of new or amended permits to TxDOT. The Contractor will not disturb soil without the proper permits.

   - Provide scale drawings of off ROW PSL's within one mile of the project, for field offices, borrow sources, plant sites or other uses.

   - Provide permit information on any Contractor batch plants or concrete crushing plants to be located at a Contractor PSL(s) within one mile of the project limits or boundaries. Copies of the air and water permits are to be provided to TxDOT before materials will be used on the project. No asphalt or concrete batch plants or concrete crushing plants will be located on TxDOT ROW.

   - Provide a letter indicating a Contractor Responsible Person for environmental compliance (CRP) for the project, and maintain a CRP throughout the project duration.

   - Provide all environmental documentation including certification of compliance and EMS training documents/certificates prior to starting work. The Contractor is to provide daily BMP inspection reports that document all field BMPs needing repair or replacement. The Contractor is to clearly document specific BMPs needing repair and location each work day. The Contractor is encouraged to be proactive in fixing BMPs without TxDOT direction.

   - Provide documentation required for Waters of the US, Note #3 and submittals for Item 496 bridge removal. Bridge removal methods submitted will follow all Waters of the US note requirements. The Contractor is not to start construction within the Ordinary High Water Marks of any stream until receiving approval for stream channel construction methods from TxDOT.

   - Provide a written procedure for managing all chemicals and construction items placed in vertical containment structures. Also, provide methods to be used for the treatment, disposal, collection or release of storm water.

   - Provide an estimated date by letter, for the submittal of marked up bridge drawings, indicating cut locations for any structural steel requiring cutting or torching of steel, coated with lead containing paints.

2. Place and maintain trash cans and portable sanitary facilities at locations where there is active construction. Worker generated trash and construction debris will be kept from being transported by storm water and will be collected daily from the ground and routinely hauled from the work area.

3. Contractor will provide TxDOT copies of all correspondence with MS4s, TCEQ, EPA, DSHS and Corps of Engineers regarding activities on this project.

4. Contractor to conduct storm water inspections and develop SWPPP documents to support Contractor permits obtained for the project including PSL(s).

5. Contractor will maintain written documentation of locations of all portable sanitary facilities. The Contractor is required to document the location and disposition of all spills and cleanups from portable sanitary facilities.

6. Contractor will not store chemicals on TxDOT ROW, unless chemicals are stored following all environmental and safety regulations. Fuels for construction equipment will not be stored on TxDOT ROW.

7. The Contractor will store fuels and bulk chemicals on Contractor PSL(s) using a secondary containment method, such as double lined tanks and/or free standing containment reservoirs made of plastic or steel designed to hold bulk chemicals or drums.

8. The Contractor will not remove sediment controls without the prior approval of TxDOT, except for a sediment control that may back up water and cause safety or traffic problems.

SCALE = NTS SHEET 1 OF 10

Texas Department of Transportation
Waco District Standard

**TYPICAL APPLICATIONS FOR BEST MANAGEMENT PRACTICES**

**TA-BMP**

| | | | | | | |
|---|---|---|---|---|---|---|
| FILE: BMPLAYOUTS.dgn | DN: | CK: | DW: | CK: | | |
| © TxDOT 2009 | DIST | FED REG | FEDERAL AID PROJECT # | | | SHEET |
| REVISIONS DEC 2013 FEB 2015 | WACO | 6 | X | | | 66 |
| | COUNTY | CONTROL | SEC | JOB | HIGHWAY | |
| | MCLENNAN | | | | X | |

# BEST MANAGEMENT PRACTICE (BMP) GENERAL NOTES

9. Any sediment controls removed by the Contractor must be re-installed before the next rainfall event or by the end of day, as approved in advance.

10. Vegetative buffer strips may be used in place of temporary sediment controls such as silt fences and rock filter dams. The amount of disturbed soil area will be limited to 1/3 of an acre or less for a minimum of 50 feet of grassed ditch and 2/3 of an acre of disturbed soil for a minimum of 100 feet of grassed ditch.

11. Construction equipment found to be leaking oil, fuel or coolant will be immediately stopped, the leaking fluid collected and the equipment fixed. Equipment continuing to leak will be removed from the project at no cost to TxDOT. Leaking fluids from equipment will be collected and removed from the project or PSL.

12. Earth berms or mounds typically used to stockpile topsoil and used in place of boundary silt fence will be seeded upon being constructed. Long term use of earth berms or mounds will not be continued without establishing grass on the control.

13. The Contractor will inform TxDOT of new areas where soil will be disturbed to facilitate planning for new sediment controls. Areas of vegetated soil will not be disturbed by the Contractor, unless adequate sediment controls can be installed before the next rainfall event. The Contractor will assist TxDOT in keeping an accurate set of working SWPPP drawings that show the locations of all temporary sediment and erosion controls.

14. The Contractor will maintain an adequate amount of temporary sediment controls on hand at the field office or project staging area for critical SWPPP maintenance, including silt fence (minimum of 200 feet) and rock / fabric for rock filter dams (minimum for 100 feet of Type III dams).

    The requirement for BMP rock quantities on hand is waived for small projects for on and off system bridge installations. The Contractor having a BMP Subcontractor does not eliminate the requirement for the Contractor to have the required silt fence and rock on hand, typically stored at the Contractor PSL.

15. Failure of a sub-contractor to complete storm water work on time will require the Contractor to start storm water sediment control work immediately and complete the work with high priority, or be subject to stop work on the entire project.

16. Earth materials on roads as a result of soil tracking will not be allowed to be transported off ROW in storm water. Soil or rock material found on roadways deposited from Contractor equipment will be removed daily.

17. Unless approved, completed concrete curb inlets will not be blocked by sediment controls. The contractor will frequently sweep the completed or partially completed roadway to keep sediment out of drainage pipes.

18. The Contractor will be responsible for proper dust control and will route construction traffic in a manner that minimizes dust generation.

19. Water for dust control will contain no pollutants, but may be non-potable from upland stock ponds. No quantity of water to be used for construction purposes may be taken from a 404 stream, prior to the proper authorizations or permits being obtained by the Contractor.

20. Contractor is to direct workers and sub-contractors to use portable sanitary facilities provided by the Contractor and not to trespass off ROW.

21. Contractor will provide written verification to TxDOT that earth borrow pits and disposal sources meet environmental and regulatory requirements, prior to use. Excavations will meet all OSHA requirements and the current safety guidelines established for TxDOT Quarries and Pits.

22. Boundary silt fences that are terminated down slope, with one end being at the lowest elevation, will be installed with an L - hook to contain sediment. Boundary silt fences that are installed on flat ground will have L-hooks on both ends.

23. Rock filter dams across ditches will be constructed where the rock filter dam ends are embedded within the ditch side slopes and ditch bottom. The top center elevation of the rock filter dam will be at least 6 inches lower than the elevations on the rock filter dam ends.

24. Silt fence will be constructed in a U or V pattern across ditch lines and up the ditch side slope to keep storm water from flowing around the ends of the silt fence. Small silt fences that do not adequately span the ditch and allows storm water around the end(s) will not be used. Where there is adequate space, large U pattern silt fences are preferred to facilitate sediment collection and sediment removal with equipment.

25. Sediment controls (RFDs or silt fences) will be located along road ditches as marked on the SWPPP drawings. Modifications to the sediment control spacing will be adjusted during the project based on sediment control effectiveness. The installation and maintenance of sediment controls at or near outfalls, where storm water leaves TxDOT ROW, takes persistent over ditch line sediment controls.

SCALE = NTS SHEET 2 OF 10

Texas Department of Transportation
Waco District Standard

**TYPICAL APPLICATIONS FOR BEST MANAGEMENT PRACTICES**

**TA-BMP**

| | | | | | |
|---|---|---|---|---|---|
| FILE: BMPLAYOUTS.dgn | DN: | CK: | DW: | CK: | |
| © TxDOT 2009 | DIST | FED REG | FEDERAL AID PROJECT # | | SHEET |
| REVISIONS DEC 2013 FEB 2015 | WACO | 6 | X | | 67 |
| | COUNTY | CONTROL | SEC | JOB | HIGHWAY |
| | MCLENNAN | | | | X |

# BEST MANAGEMENT PRACTICE (BMP) GENERAL NOTES

26. Storm water draining sheet flow over disturbed soil sloped towards the ROW property line, will be intercepted by a boundary silt fence typically installed with L-shaped ends.

27. For ditch grading and shoulder up work, the Contractor is limited during good weather to remove up to one mile (limited to five acres of disturbed soil) of ditch line sediment controls; on one side of the roadway. Outfall controls cannot be removed during this activity. Ditch line controls must be replaced upon completion of work and before the next rain event.

28. Sediment controls damaged by the Contractor, as defined by permit, must be fixed or replaced immediately upon discovery.

29. Notches in silt fences are not typically allowed. Specific silt fences that back up water onto lanes of traffic may be notched if approved.

30. For silt fence maintenance, the Contractor will leave approximately 4 inches of deposited sediment up stream of silt fences and not over excavate around silt fences or rock filter dams.

31. The Contractor will inform TxDOT of new construction areas and where soil is planned to be disturbed. Sediment controls will be installed at outfalls prior to the Contractor beginning soil disturbing activities up slope from the outfall.

32. Water from concrete saw cutting, concrete grinding and concrete coring activities; or fine materials from concrete chipping and salvage will not be allowed to enter storm drains or enter streams.

33. Storm water containing suspended sediment and turbidity needing to be removed from excavations or low areas will be pumped or gravity drained through vegetated buffer strips (50 foot minimum) or placed in ditches with temporary sediment controls, prior to the water being discharged into a stream.

34. Uncontaminated water from natural groundwater seepage, springs, foundations and drains that does not contain suspended sediment or any pollutants may be discharged without storm water controls.

35. Lime or cement if spilled in ditches or outside the defined limits of application is considered a pollutant and will be excavated and removed the same day, to avoid contaminating streams.

36. If located along the project ROW, RAP stockpiles will be located where there is a minimum 100 feet of vegetative buffer strip before storm water will reach a stream. RAP will not be used as a construction material within the Ordinary High Water Marks of a stream channel of a 404 designated stream.

37. If allowed on the project, concrete truck wash out areas will have adequate volume to allow 12 inch freeboard for rain and will be lined with 6 mils of plastic. No concrete will be stored higher than the 12 inch freeboard. Cleaning of truck chutes and equipment does not constitute concrete truck wash out and this activity may be completed at the concrete placement location. Wash out areas will not be located closer than 50 ft from down slope inlets or stream channels.

38. For outfalls near stock ponds closer than 50 foot from disturbed soil at the ROW line, redundant sediment controls will be provided, typically a combination of rock filter dam and a silt fence constructed in line of the flow.

39. Earth stockpiles will utilize silt fence sediment controls, positioned on the low end of the stockpile drainage area with L-hooks or silt fence installed around the entire stockpile.

40. Sediment controls including rock filter dams and silt fences will not be installed across any 404 streams. Sediment controls at 404 streams will be positioned to limit sediment entering the stream from the banks and around structures/culverts, and will allow free flow of storm water to pass through the ROW without being dammed by any sediment controls. Remove loose materials from stream channels prior to each rain event.

41. Sediment controls for non-404 streams may be constructed across the drainage channel in unlimited locations. It is appropriate to use sediment control details typically used for 404 streams for non-404 streams when flow velocities are high. Remove loose material from stream channels prior to each rain event.

42. Incomplete drainage pipe installation across the roadway does not remove the requirement for having sediment controls around the ends of the pipe. To stay within permit requirements, sediment controls should be installed over and around the terminated end and along each side of the banks as soon as construction on the pipe has been completed. Remove loose material from stream channels prior to each rain event.

43. Safety end / headwall construction temporarily will require the removal of part of the sediment control placed over and around the pipe end. Retain in place as much functioning sediment control as possible. Replace the silt fence over and around the top of the pipe, immediately upon concrete placement and form removal. Do not remove culvert sediment controls that cannot be replaced before the next rain event. Sediment control at the ends of culverts must be in place and available for any rain event until the disturbed soil areas are re-vegetated.

SCALE = NTS SHEET 3 OF 10

Texas Department of Transportation
Waco District Standard

**TYPICAL APPLICATIONS FOR BEST MANAGEMENT PRACTICES**

**TA-BMP**

| FILE: BMPLAYOUTS.dgn | DN: | CK: | DW: | CK: | | |
|---|---|---|---|---|---|---|
| ©TxDOT 2009 | DIST | FED REG | FEDERAL AID PROJECT | | | SHEET |
| REVISIONS | WACO | 6 | X | | | 68 |
| DEC 2013 | COUNTY | CONTROL | SEC | JOB | HIGHWAY | |
| FEB 2015 | MCLENNAN | | | | X | |

# BEST MANAGEMENT PRACTICE (BMP) GENERAL NOTES

44. Between the Ordinary High Water Marks of a 404 stream channel, the Contractor will disturb only the minimum amount of stream channel that is necessary to complete the work.

45. Rock riprap for erosion control does not replace the requirements to maintain sediment control until vegetation is re-established. Replace sediment controls immediately after installing erosion rock.

46. At the direction of TxDOT, sediment deposited into existing and new culverts will be removed subsidiary to Item 506. Sediment to be removed is either pre-existing material before construction starts or sediment generated as a part of this project.

47. Provide treated 2X4 cross bracing for rectangular inlet silt fence, subsidiary to Item 506.

48. Loose or granular earth materials will not be used to repair silt fence undercuts. Silt fence undercut repairs will be conducted with well compacted soils or the silt fence will be reset in a nearby location.

49. Silt fence steel T posts of approximately 1.25 pounds per foot are allowed at a spacing of 8 feet or less. Silt fence steel T posts between approximately 1.25 pounds per foot and 0.85 pounds per foot are allowed for T post spacing of 5 feet or less.

50. Silt fence to be used to slow the flow of storm water down slopes will be positioned approximately horizontal (on the contour) with L hooks on the ends and limited to approximately 200 feet in length. Multiple sections and levels of silt fence may be required in addition to temporary / permanent erosion control flumes.

51. Soil retention blankets will be installed rolled down the slope with the small dimension side embedded at the top of slope, unless recommended otherwise by the manufacturer. Excess grass, rocks, trash, debris or clods will be removed before seeding and installing soil retention blankets. All installations will be by the manufacturer recommendations. Contractor equipment, including tractor mowers will be kept off areas with soil retention blankets until the grass is established.

SCALE = NTS SHEET 4 OF 10

Texas Department of Transportation
Waco District Standard

**TYPICAL APPLICATIONS FOR BEST MANAGEMENT PRACTICES**

**TA-BMP**

| FILE: BMPLAYOUTS.dgn | DN: | CK: | DW: | CK: | |
|---|---|---|---|---|---|
| ©TxDOT 2009 | DIST | FED REG | FEDERAL AID PROJECT | | SHEET |
| REVISIONS | WACO | 6 | X | | 69 |
| DEC 2013 | COUNTY | CONTROL | SEC | JOB | HIGHWAY |
| FEB 2015 | MCLENNAN | | | | X |

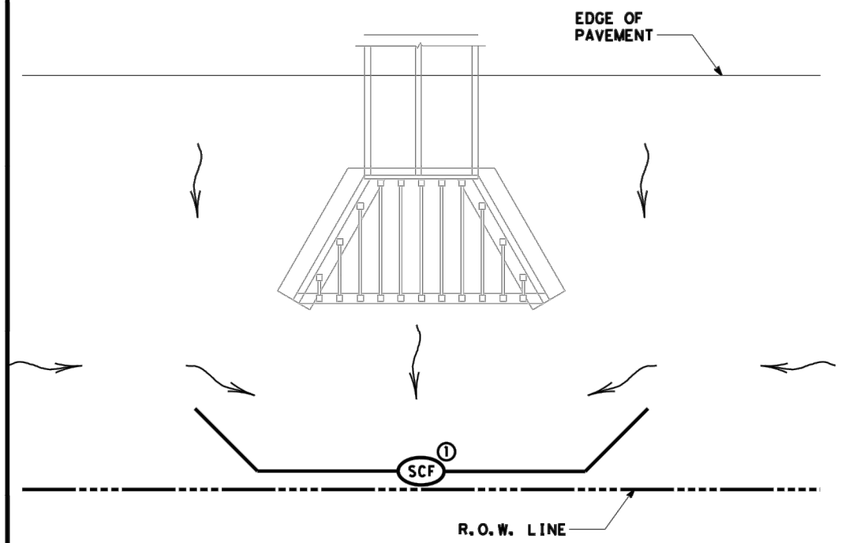


## BEST MANAGEMENT PRACTICE (BMP) #1

FOR NON-404 STREAMS ONLY ~ SEDIMENT CONTROL AT EXIT OF CULVERT

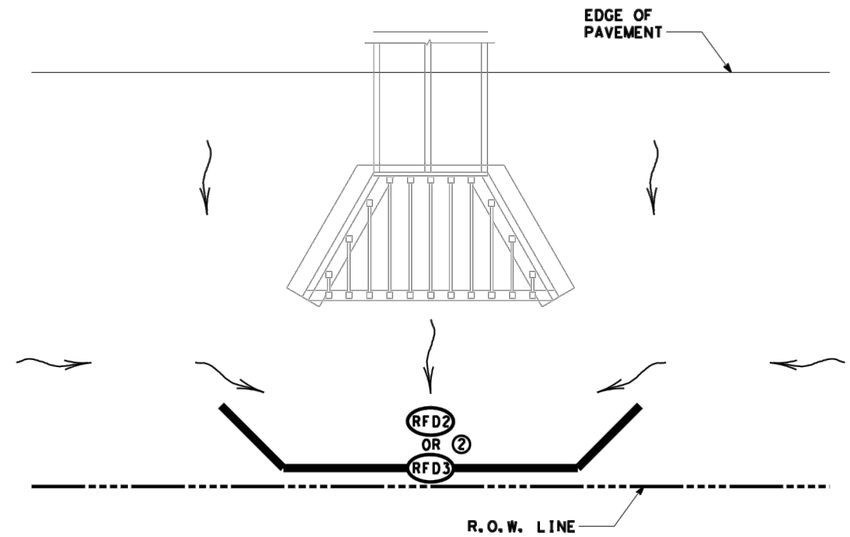


## BEST MANAGEMENT PRACTICE (BMP) #2

FOR NON-404 STREAMS ONLY ~ SEDIMENT CONTROL AT EXIT OF CULVERT

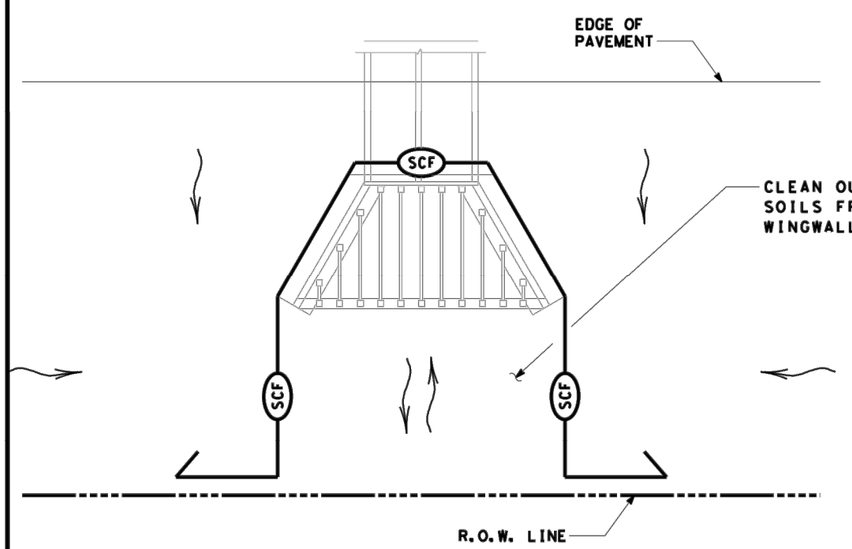


## BEST MANAGEMENT PRACTICE (BMP) #3

FOR 404 OR NON-404 STREAMS ~ SEDIMENT CONTROL AT EXIT OR ENTRANCE OF CULVERT

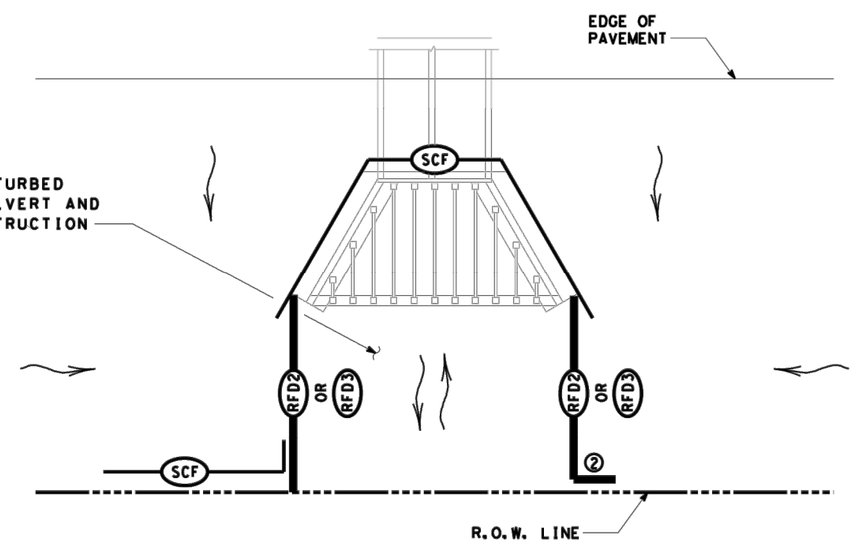


## BEST MANAGEMENT PRACTICE (BMP) #4

FOR 404 OR NON-404 STREAMS ~ SEDIMENT CONTROL AT EXIT OR ENTRANCE OF CULVERT

| | |
|---|---|
| SCF | SEDIMENT CONTROL FENCE |
| RFD2 | ROCK FILTER DAM (TY 2) |
| RFD3 | ROCK FILTER DAM (TY 3) |
| | DIRECTION OF FLOW |

NOTES:

1. EXTEND SILT FENCE SO STORM WATER DOES NOT GO AROUND THE ENDS. USE L-HOOKS ON ENDS AS REQUIRED.
2. EXTEND ROCK FILTER DAM SO STORM WATER DOES NOT GO AROUND THE ENDS.

SCALE = NTS SHEET 5 OF 10

Texas Department of Transportation
Waco District Standard

# TYPICAL APPLICATIONS FOR BEST MANAGEMENT PRACTICES

TA-BMP

| | | | | |
|---|---|---|---|---|
| FILE: BMPLAYOUTS.dgn | DN: TXDOT | CK: TXDOT | DW: TXDOT | CK: TXDOT |
| © TxDOT 2009 | DIST | FED REG | FEDERAL AID PROJECT | SHEET |
| REVISIONS DEC 2013 FEB 2015 | WACO | 6 | X | 70 |
| | COUNTY | CONTROL | SEC / JOB | HIGHWAY |
| | MCLENNAN | | | X |

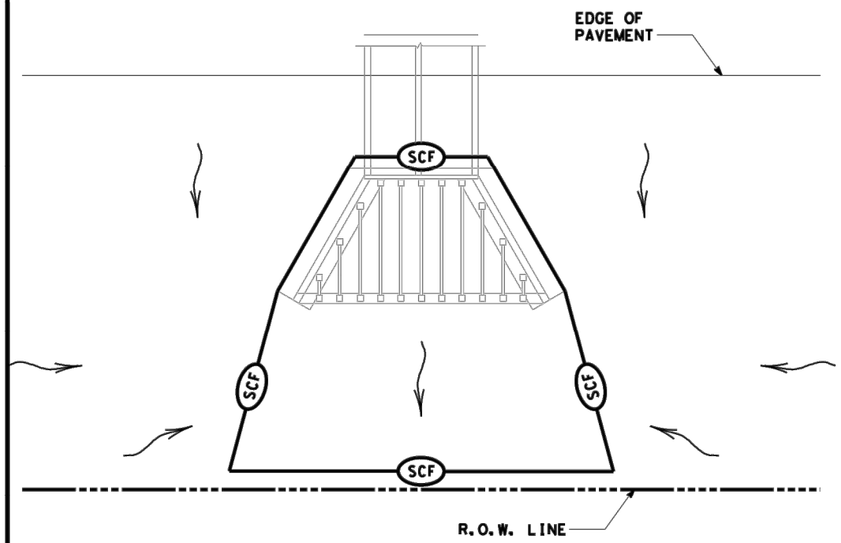


## BEST MANAGEMENT PRACTICE (BMP) #5

FOR NON-404 STREAMS ONLY ~ SEDIMENT CONTROL AT EXIT OF CULVERT

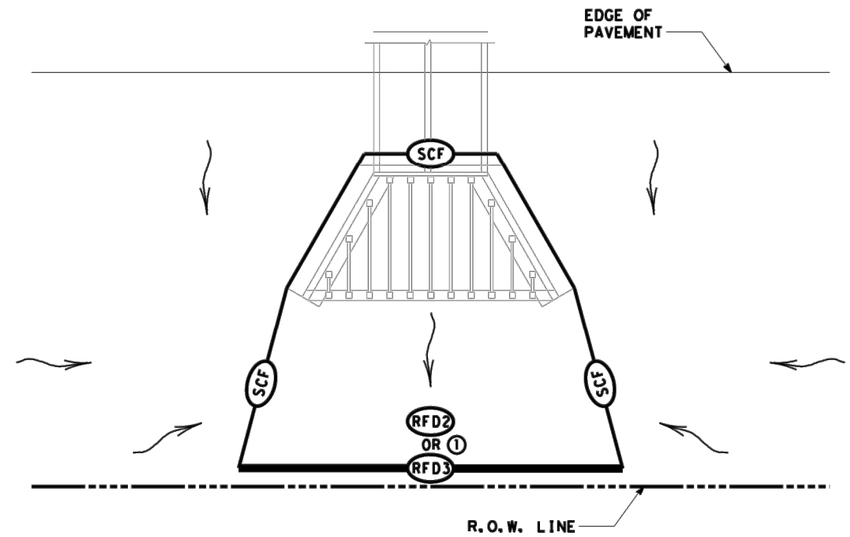


## BEST MANAGEMENT PRACTICE (BMP) #6

FOR NON-404 STREAMS ONLY ~ SEDIMENT CONTROL AT EXIT OF CULVERT

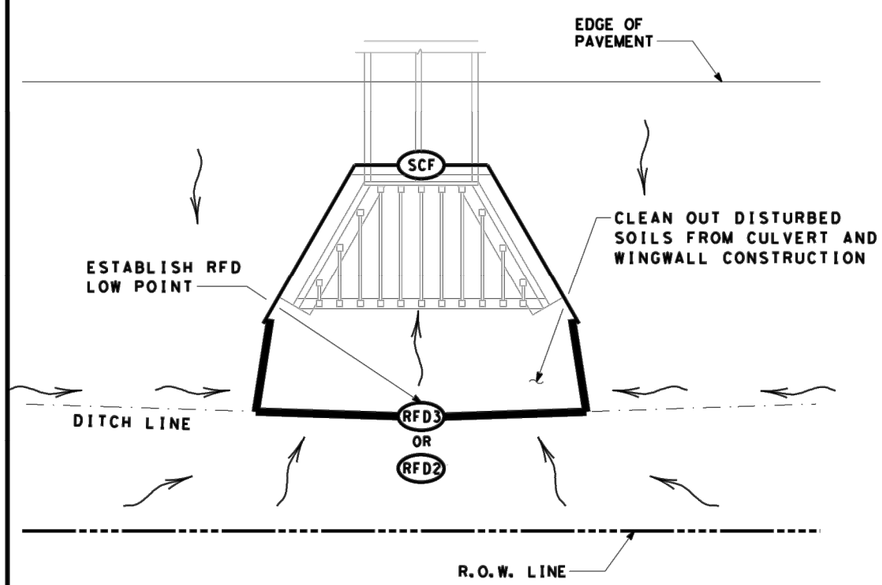


## BEST MANAGEMENT PRACTICE (BMP) #7

FOR NON-404 STREAMS ONLY ~ SEDIMENT CONTROL AT ENTRANCE OF CULVERT

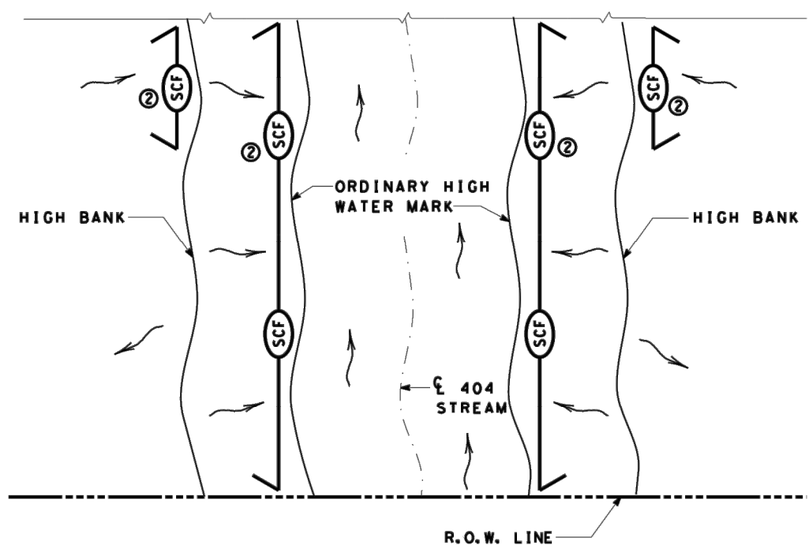


## BEST MANAGEMENT PRACTICE (BMP) #8

FOR 404 STREAMS ~ SEDIMENT CONTROL DURING PROJECT CLEARING AND GRUBBING

| | |
|---|---|
| SCF | SEDIMENT CONTROL FENCE |
| RFD2 | ROCK FILTER DAM (TY 2) |
| RFD3 | ROCK FILTER DAM (TY 3) |
| | DIRECTION OF FLOW |

NOTES:

① PROVIDE OVERLAP OF SILT FENCE WITH ROCK FILTER DAM.

② USE SILT FENCE L-HOOKS ON ENDS TO BLOCK STORM WATER SEDIMENT

SCALE = NTS SHEET 6 OF 10

Texas Department of Transportation
Waco District Standard

# TYPICAL APPLICATIONS FOR BEST MANAGEMENT PRACTICES

TA-BMP

| | | | | |
|---|---|---|---|---|
| FILE: BMPLAYOUTS.dgn | DN: TXDOT | CK: TXDOT | DW: TXDOT | CK: TXDOT |
| © TxDOT 2009 | DIST | FED REG | FEDERAL AID PROJECT # | SHEET |
| REVISIONS DEC 2013 FEB 2015 | WACO | 6 | X | 71 |
| | COUNTY | CONTROL | SEC / JOB | HIGHWAY |
| | MCLENNAN | | | X |

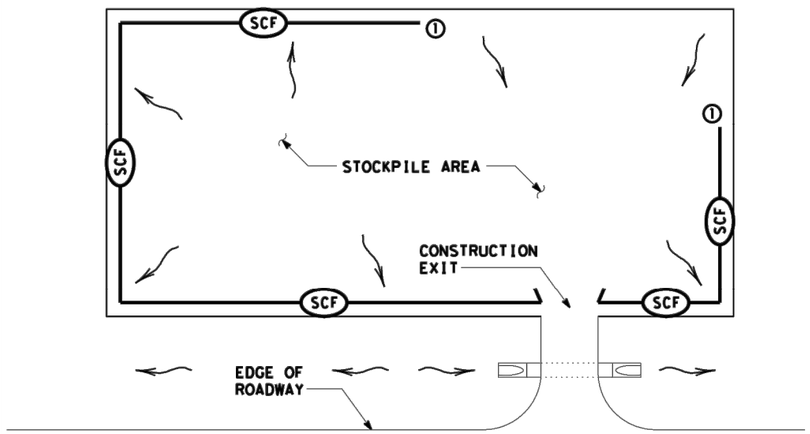


## BEST MANAGEMENT PRACTICE (BMP) #9

STOCKPILE SEDIMENT CONTROL

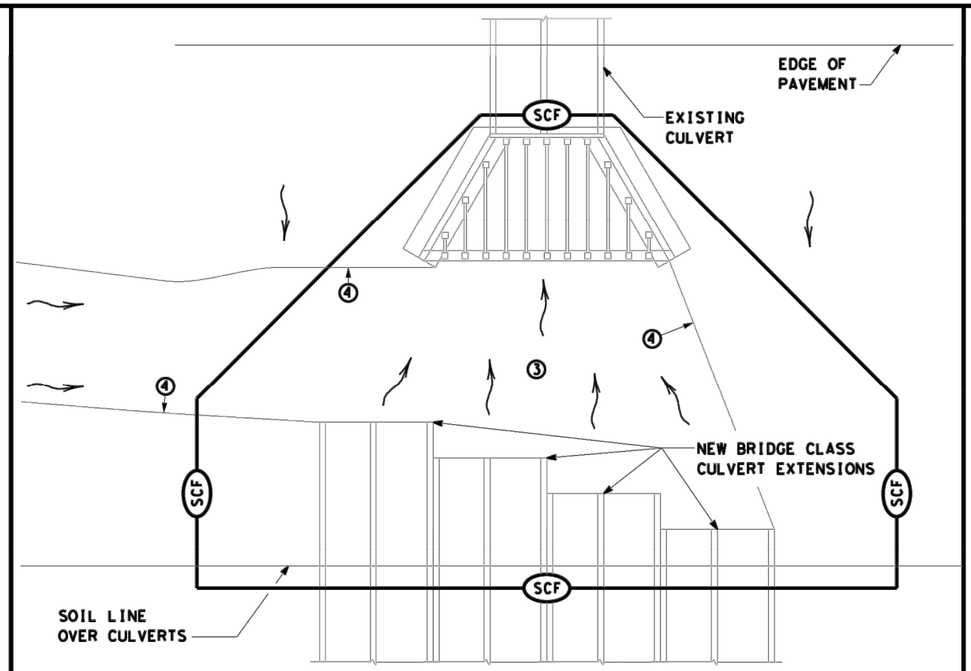


## BEST MANAGEMENT PRACTICE (BMP) #10

FOR 404 OR NON-404 STREAMS ONLY ~
SEDIMENT CONTROL AT PHASED CONSTRUCTION OF BRIDGE CLASS CULVERTS

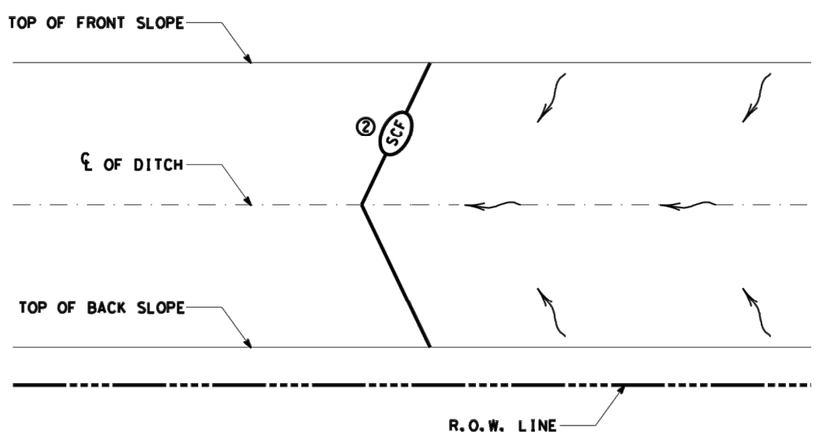


## BEST MANAGEMENT PRACTICE (BMP) #11

BOUNDRY SEDIMENT CONTROL ~ BOTH ENDS OF CONTROL TERMINATED UP SLOPE

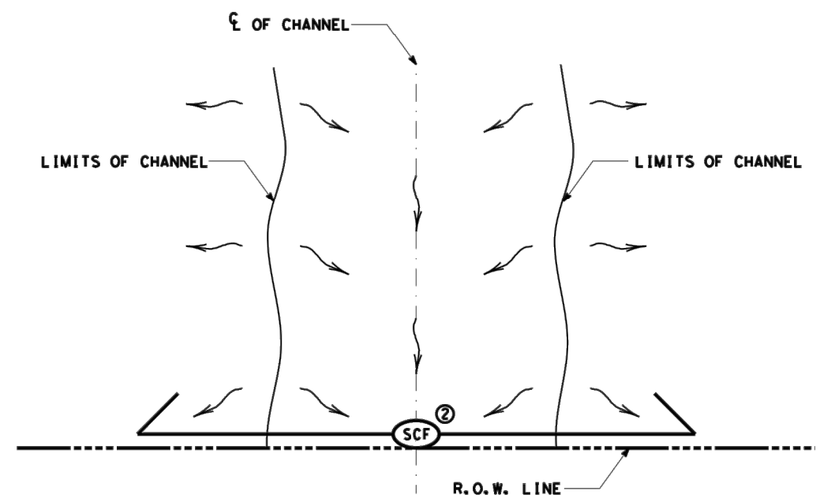


## BEST MANAGEMENT PRACTICE (BMP) #12

BOUNDRY SEDIMENT CONTROL ~ BOTH ENDS OF CONTROL TERMINATED DOWN SLOPE

| | |
|---|---|
| SCF | SEDIMENT CONTROL FENCE |
| RFD2 | ROCK FILTER DAM (TY 2) |
| RFD3 | ROCK FILTER DAM (TY 3) |
| | DIRECTION OF FLOW |

NOTES:

① START SEDIMENT CONTROL AT LOCATION SO ALL STORM WATER WITH SEDIMENT IS COLLECTED

② ROCK FILTER DAMS OR EARTH/GRASSED EMBANKMENTS CAN BE SUBSTITUTED AS DIRECTED.

③ PROVIDE A SMOOTH TRANSITION FROM THE INVERT ELEVATIONS BETWEEN CULVERTS. REMOVE LOOSE SOIL FROM EXCAVATED AREA BETWEEN CULVERTS.

④ PROVIDE AND INSTALL PNEUMATICALLY PLACED CONCRETE ON THE DITCH BOTTOM AND SIDE SLOPES BETWEEN TEMPORARY TERMINATIONS BETWEEN OLD AND NEW CULVERTS. PNEUMATICALLY PLACED CONCRETE WILL BE PLACED TO THE HEIGHT OF THE LARGEST CULVERT ON THE DITCH SIDE SLOPES; AND TO A LIMIT 10 FEET OUTSIDE THE LOCATION OF BMPS ALONG THE DITCH BOTTOM. CEMENT STABILIZED SAND MAY BE SUBSTITUTED FOR PNEUMATICALLY PLACED CONCRETE, IN AREAS WHERE INSTALLATION WORKS AND AT THE OPTION OF TXDOT.

SCALE = NTS SHEET 7 OF 10

Texas Department of Transportation
Waco District Standard

# TYPICAL APPLICATIONS FOR BEST MANAGEMENT PRACTICES

TA-BMP

| | | | | | |
|---|---|---|---|---|---|
| FILE: BMPLAYOUTS.dgn | DN: TXDOT | CK: TXDOT | DW: TXDOT | CK: TXDOT | |
| © TxDOT 2009 | DIST | FED REG | FEDERAL AID PROJECT | | SHEET |
| REVISIONS | WACO | 6 | X | | 72 |
| DEC 2013 | COUNTY | CONTROL | SEC | JOB | HIGHWAY |
| FEB 2015 | MCLENNAN | | | | X |

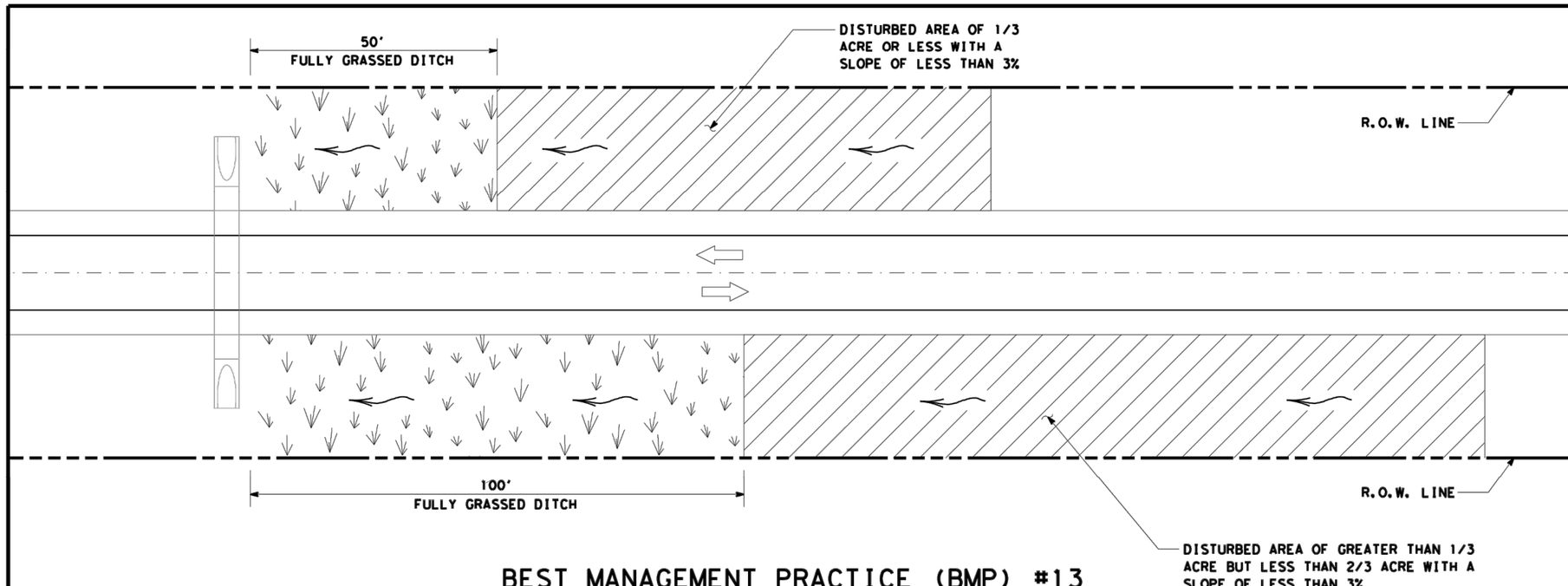


## BEST MANAGEMENT PRACTICE (BMP) #13

USE OF VEGETATIVE BUFFERS IN PLACE OF TEMPORARY SEDIMENT CONTROLS SUCH AS SILT FENCE AND ROCK FILTER DAMS

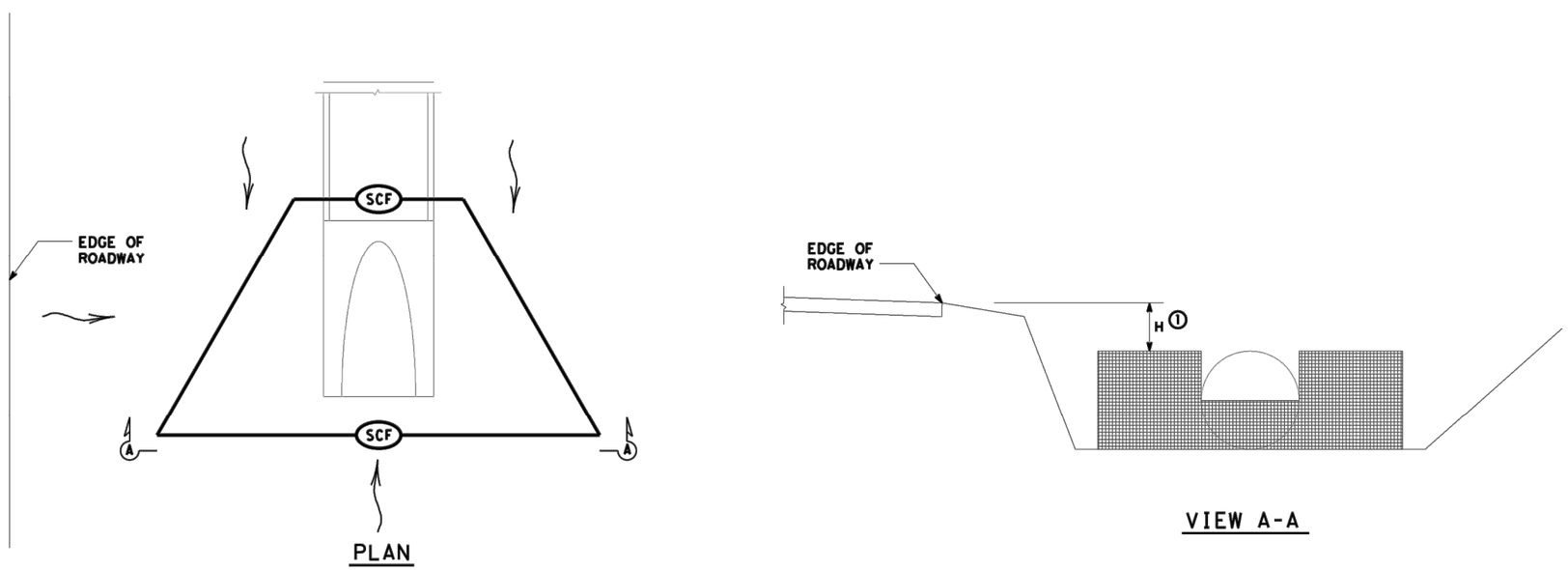


## BEST MANAGEMENT PRACTICE (BMP) #14

NON-404 STREAMS AND DITCHES ONLY ~ SEDIMENT CONTROL AT PARALLEL DRAINAGE STRUCTURE ENTRANCE ②

| | |
|---|---|
| | FULLY GRASSED DITCH |
| | DISTURBED AREA |
| | DIRECTION OF FLOW |
| SCF | SEDIMENT CONTROL FENCE |

① FOR H DIMENSIONS LESS THAN 1.5' SILT FENCE MAY NEED TO BE NOTCHED AS SHOWN IN VIEW A-A. ADD EXTRA POSTS AT NOTCH.

② BMP #14 MAY BE USED AT CROSS DRAINAGE STRUCTURES AS DIRECTED.

SCALE = NTS SHEET 8 OF 10

Texas Department of Transportation
Waco District Standard

# TYPICAL APPLICATIONS FOR BEST MANAGEMENT PRACTICES

TA-BMP

| | | | | |
|---|---|---|---|---|
| FILE: BMPLAYOUTS.dgn | DN: TXDOT | CK: TXDOT | DW: TXDOT | CK: TXDOT |
| © TxDOT 2009 | DIST | FED REG | FEDERAL AID PROJECT # | SHEET |
| REVISIONS DEC 2013 FEB 2015 | WACO | 6 | X | 73 |
| | COUNTY | CONTROL | SEC | JOB | HIGHWAY |
| | MCLENNAN | | | | X |

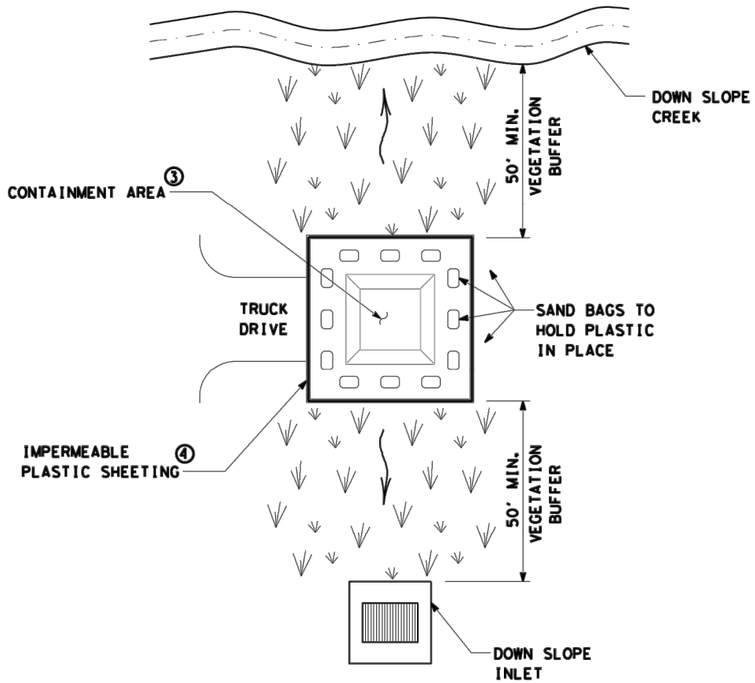


## BEST MANAGEMENT PRACTICE (BMP) #15

CONCRETE TRUCK WASHOUT AREA

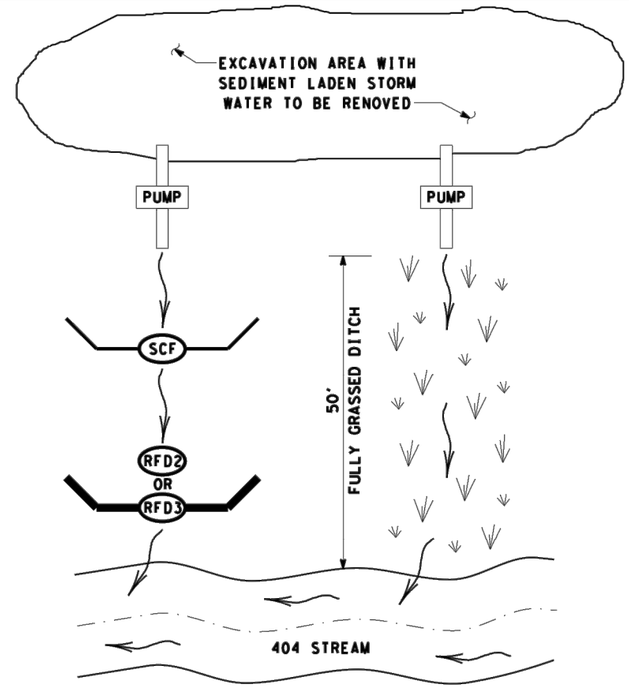


## BEST MANAGEMENT PRACTICE (BMP) #16

PUMPED STORM WATER SEDIMENT CONTROLS ①

| | |
|---|---|
| | FULLY GRASSED DITCH |
| | DIRECTION OF FLOW |
| SCF | SEDIMENT CONTROL FENCE |
| RFD2 | ROCK FILTER DAM (TY 2) |
| RFD3 | ROCK FILTER DAM (TY 3) |

① PUMPED STROM WATER FROM AN EXCAVATION AREA SHOULD BE DISCHARGED IN A 50' VEGETATIVE BARRIER OR THROUGH TWO TEMPORARY SEDIMENT CONTROLS BEFORE ENTERING A 404 STREAM.

② FOR LANDOWNER STOCKPONDS WITHIN 50' OF THE RIGHT OF WAY LINE, PROVIDE REDUNDANT SEDIMENT CONTROLS AT THE CONVEYANCE OF THE POND. MINIMUM OF TWO SEDIMENT CONTROLS.

③ WHEN CONTAINMENT AREA REACHES 1' FREEBOARD, DISCONTINUE WASHOUT PLACEMENT AND REMOVE MATERIAL UPON SOLIDIFICATION.

④ EACH TIME SOLIDIFIED MATERIAL IS REMOVED REPLACE PLASTIC SHEETING.

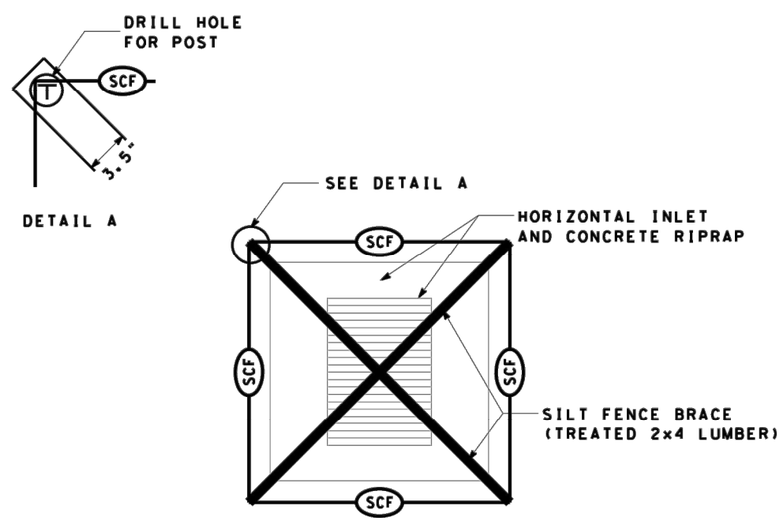


## BEST MANAGEMENT PRACTICE (BMP) #17

HORIZONTAL INLET SEDIMENT CONTROL

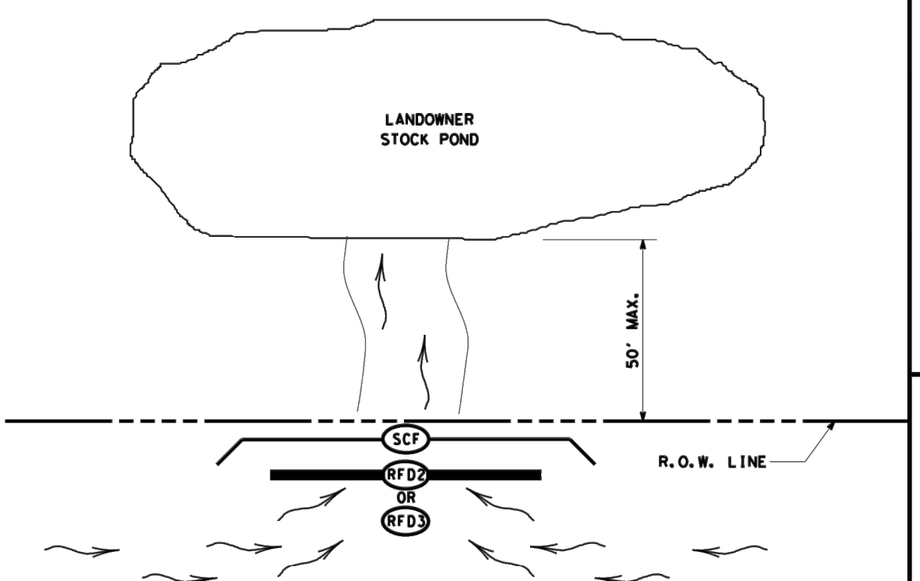


## BEST MANAGEMENT PRACTICE (BMP) #18

LANDOWNER STOCKPOND SEDIMENT CONTROL ②

SCALE = NTS SHEET 9 OF 10

Texas Department of Transportation
Waco District Standard

# TYPICAL APPLICATIONS FOR BEST MANAGEMENT PRACTICES

TA-BMP

| | | | | | |
|---|---|---|---|---|---|
| FILE: BMPLAYOUTS.dgn | DN: TXDOT | CK: TXDOT | DW: TXDOT | CK: TXDOT | |
| © TxDOT 2009 | DIST | FED REG | FEDERAL AID PROJECT # | | SHEET |
| REVISIONS DEC 2013 FEB 2015 | WACO | 6 | X | | 74 |
| | COUNTY | CONTROL | SEC | JOB | HIGHWAY |
| | MCLENNAN | | | | X |

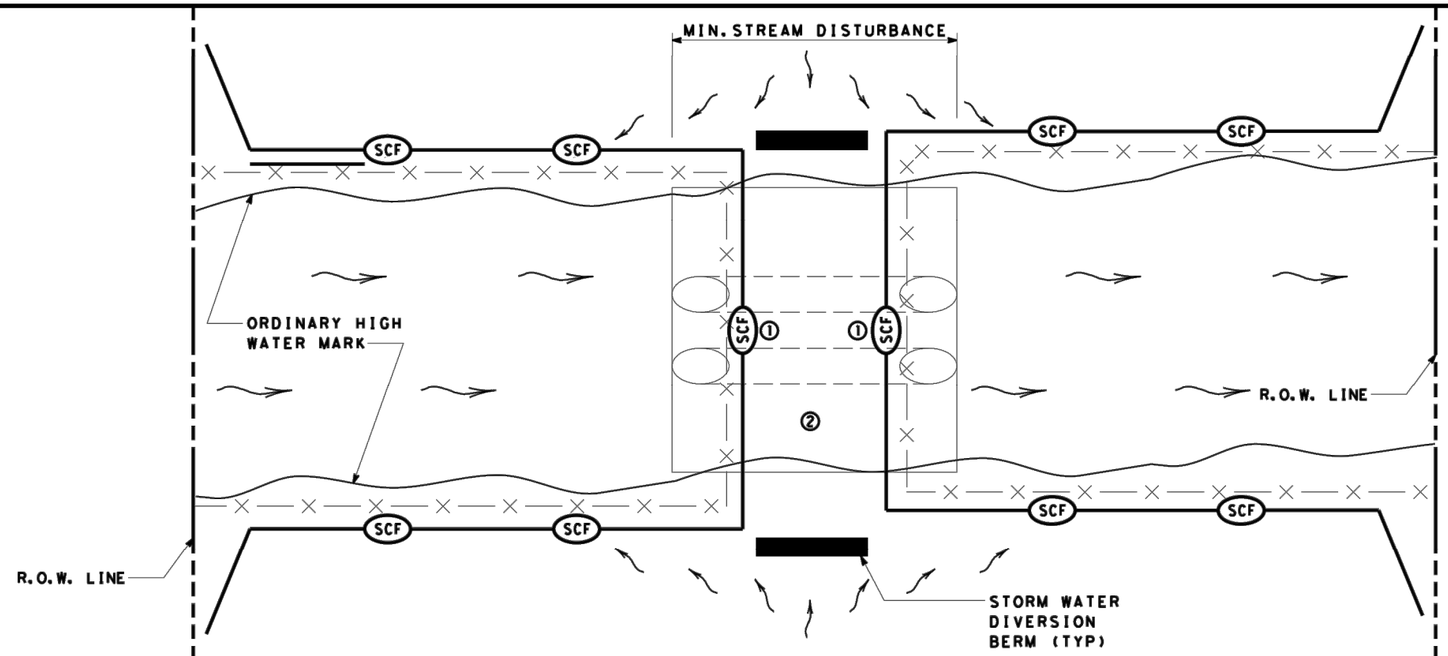


## BEST MANAGEMENT PRACTICE (BMP) #19

TYPICAL 404 STREAM CROSSING (SEDIMENT CONTROL AT CROSSING)

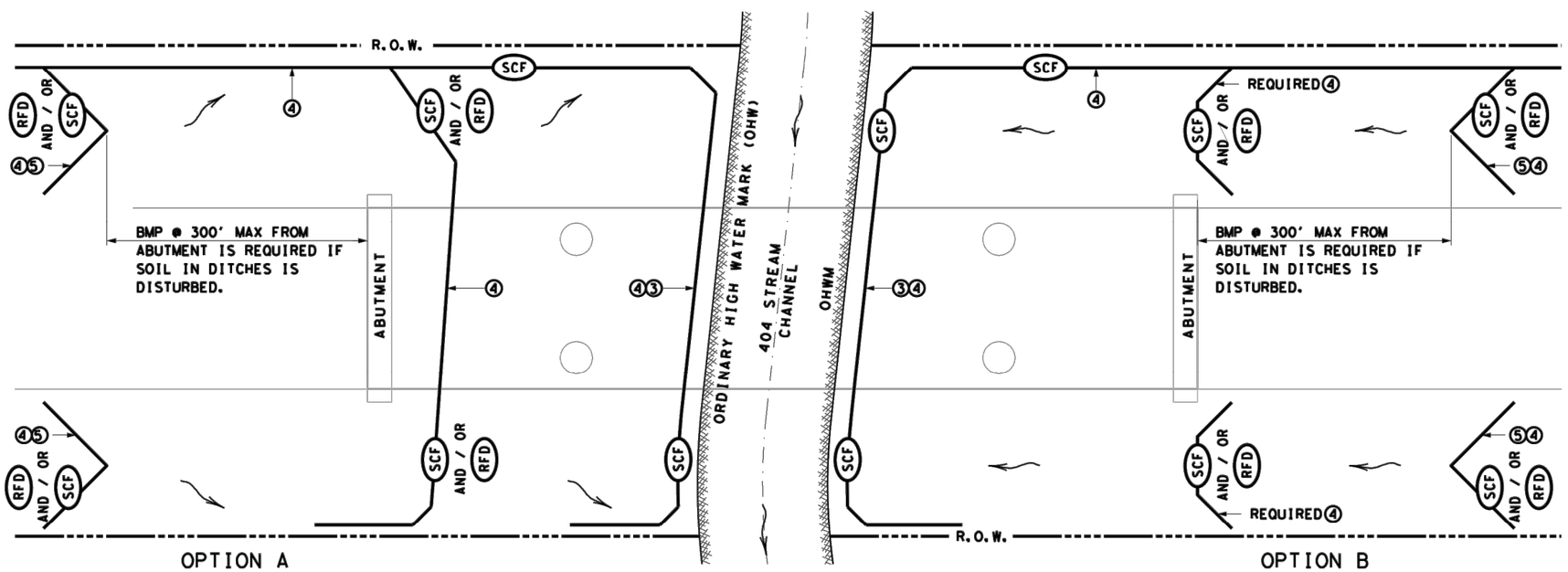


## BEST MANAGEMENT PRACTICE (BMP) #20

FOR 404 STREAMS ~ BMP'S AT BRIDGES

| | |
|---|---|
| | DIRECTION OF FLOW |
| SCF | SEDIMENT CONTROL FENCE |
| RFD | ROCK FILTER DAM |
| | SECURITY FENCING |

① HAY BALES MAY BE SUBSTITUTED FOR SILT FENCE OVER THE STREAM CROSSING.

② CROSSING WILL BE AS PER REQUIREMENTS OF THE WATERS OF THE US GENERAL NOTES.

③ INSTALL SILT FENCE SLIGHTLY UP FROM OHW MARK FROM R.O.W. TO R.O.W.

④ USE SILT FENCE L-HOOKS ON LEVEL OR DOWN SLOPING ENDS TO BLOCK STORM WATER SEDIMENT

⑤ INSTALL LARGE V OR U SHAPED BMP'S FROM ABUTMENT AS SHOWN. IF THERE IS STEEP DITCH CONDITIONS DECREASE SPACING AND CONSIDER RFD'S. ADD ADDITIONAL BMP'S IF GRADE IS STEEP OR IF FLOW IS HIGH.

SCALE = NTS SHEET 10 OF 10

Texas Department of Transportation
Waco District Standard

# TYPICAL APPLICATIONS FOR BEST MANAGEMENT PRACTICES

TA-BMP

| | | | | | |
|---|---|---|---|---|---|
| FILE: BMPLAYOUTS.dgn | DN: TXDOT | CK: TXDOT | DW: TXDOT | | CK: TXDOT |
| © TxDOT 2009 | DIST | FED REG | FEDERAL AID PROJECT # | | SHEET |
| REVISIONS DEC 2013 FEB 2015 | WACO | 6 | X | | 75 |
| | COUNTY | CONTROL | SEC | JOB | HIGHWAY |
| | MCLENNAN | | | | X |

DISCLAIMER:
The use of this standard is governed by the "Texas Engineering Practice Act". No warranty of any kind is made by TxDOT for any purpose whatsoever. TxDOT assumes no responsibility for the conversion of this standard to other formats or for incorrect results or damages resulting from its use.

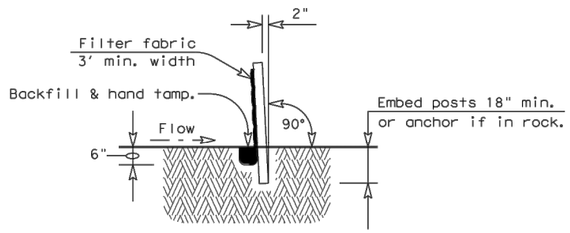


## SECTION A-A

GENERAL NOTES

1. The guidelines shown hereon are suggestions only and may be modified by the Engineer.

## PLAN SHEET LEGEND

Sediment Control Fence —— SCF ——

### SEDIMENT CONTROL FENCE USAGE GUIDELINES

A sediment control fence may be constructed near the downstream perimeter of a disturbed area along a contour to intercept sediment from overland runoff. A 2 year storm frequency may be used to calculate the flow rate to be filtered.

Sediment control fence should be sized to filter a max. flow through rate of 100 GPM/FT$^2$. Sediment control fence is not recommended to control erosion from a drainage area larger than 2 acres.

Galv. Hinge joint knot woven mesh (12.5 Ga. Min.) requires a minimum of five horizontal wires spaced at a max. 12 inches apart and all vertical wires spaced at a max. 12 inches apart.

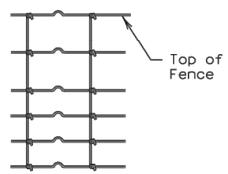


## Hinge Joint Knot Woven Mesh (Option)

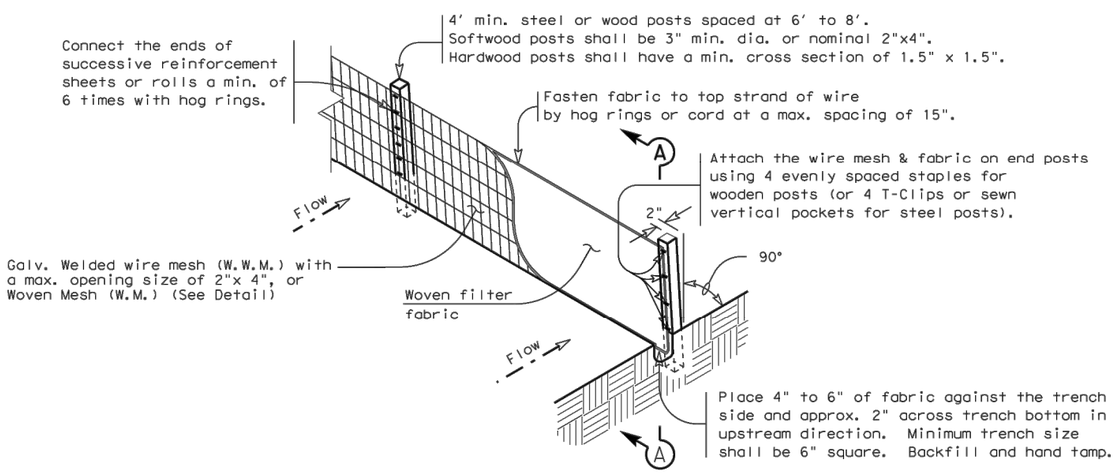


## TEMPORARY SEDIMENT CONTROL FENCE

—— SCF ——

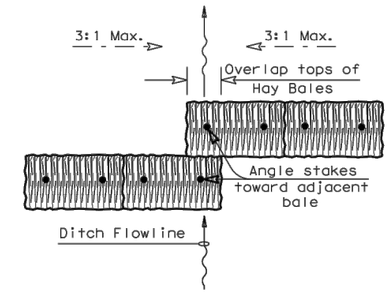


## PLAN VIEW

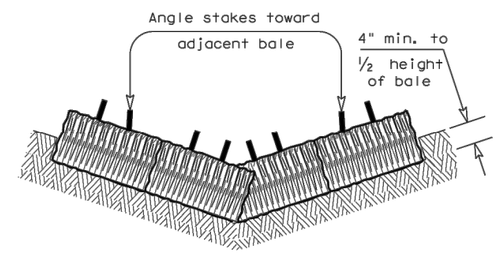


## PROFILE VIEW

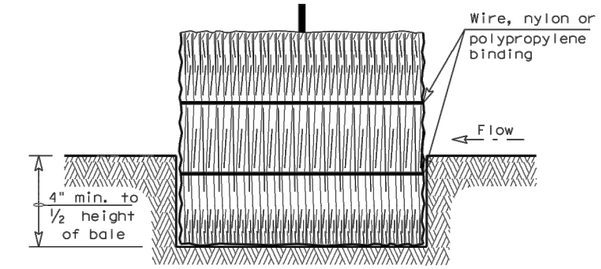


## SECTION B-B

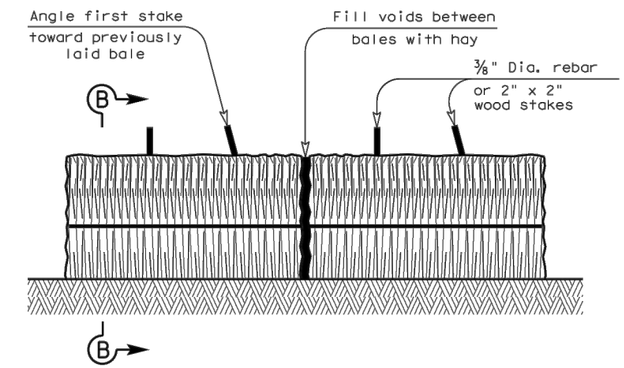


## BALED HAY FOR EROSION CONTROL

—— BH ——

## PLANS SHEET LEGEND

Baled Hay —— BH ——

### BALED HAY USAGE GUIDELINES

A Baled Hay installation may be constructed near the downstream perimeter of a disturbed area along a contour to intercept sediment from overland runoff. A two year storm frequency may be used to calculate the flow rate to be filtered. The installation should be sized to filter a maximum flow thru rate of 5 GPM/FT$^2$ of cross sectional area. Baled hay may be used at the following locations:

1. Where the runoff approaching the baled hay flows over disturbed soil for less than 100'. If the slope of the disturbed soil exceeds 10%, the length of slope upstream the baled hay should be less than 50'.
2. Where the installation will be required for less than 3 months.
3. Where the contributing drainage area is less than ½ acre.

For Baled Hay installations in small ditches, the additional following considerations apply:

1. The ditch sideslopes should be graded as flat as possible to maximize the drainage flowrate thru the hay.
2. The ditch should be graded large enough to contain the overtopping drainage when sediment has filled to the top of the baled hay.

Bales should be replaced usually every 2 months or more often during wet weather when loss of structural integrity is accelerated.

GENERAL NOTES

1. Hay bales shall be a minimum of 30" in length and weigh a minimum of 50 Lbs.
2. Hay bales shall be bound by either wire or nylon or polypropylene string. The bales shall be composed entirely of vegetative matter.
3. Hay bales shall be embedded in the soil a minimum of 4" and where possible ½ the height of the bale.
4. Hay bales shall be placed in a row with ends tightly abutting the adjacent bales. The bales shall be placed with bindings parallel to the ground.
5. Hay bales shall be securely anchored in place with ⅜" Dia. rebar or 2" x 2" wood stakes, driven through the bales. The first stake shall be angled towards the previously laid bale to force the bales together.
6. The guidelines shown hereon are suggestions only and may be modified by the Engineer.

Texas Department of Transportation — Design Division Standard

# TEMPORARY EROSION, SEDIMENT AND WATER POLLUTION CONTROL MEASURES

## FENCE & BALED HAY

## EC(1)-09

| FILE: ec109.dgn | DN: TxDOT | CK: AM | DW: TV | CK: BD |
|---|---|---|---|---|
| ©TxDOT June 1993 | CONT | SECT | JOB | HIGHWAY |
| REVISIONS | | | | |
| | DIST | COUNTY | | SHEET NO. |
| | WACO | MCLENNAN | | 76 |

DATE:
FILE:

DISCLAIMER:
The use of this standard is governed by the "Texas Engineering Practice Act". No warranty of any kind is made by TxDOT for any purpose whatsoever. TxDOT assumes no responsibility for the conversion of this standard to other formats or for incorrect results or damages resulting from its use.

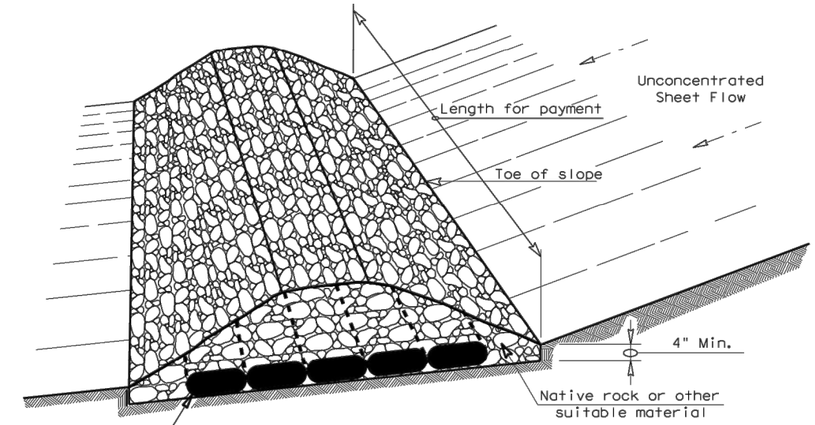


## FILTER DAM AT TOE OF SLOPE

RFD1

TYPE 1

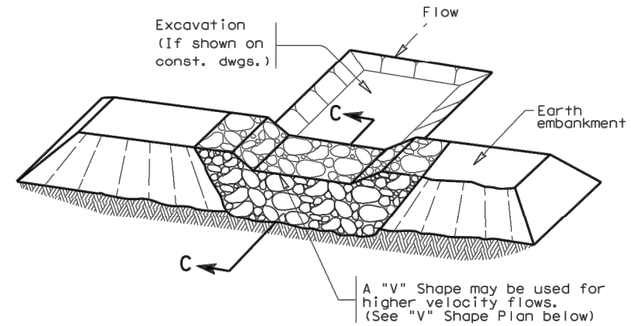


## FILTER DAM AT SEDIMENT TRAP

RFD1 — OR — RFD2

TYPE 1 OR TYPE 2

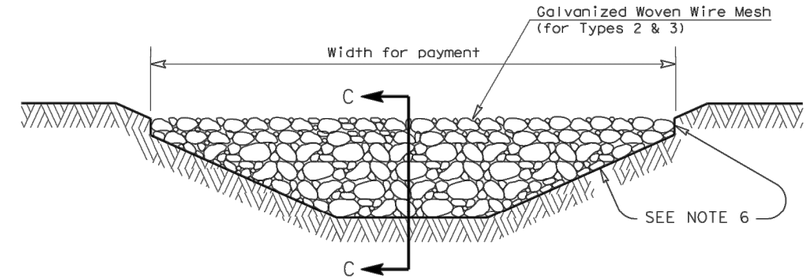


## FILTER DAM AT CHANNEL SECTIONS

RFD1 — OR — RFD2 — OR — RFD3

TYPE 1 OR TYPE 2

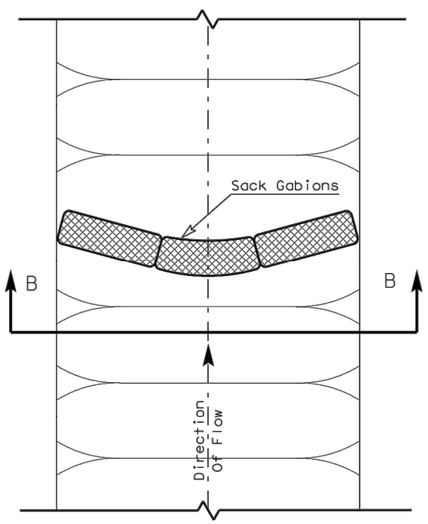


## PLAN VIEW

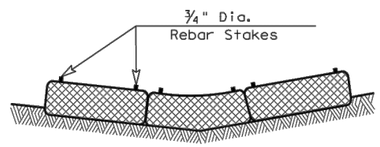


## SECTION B-B

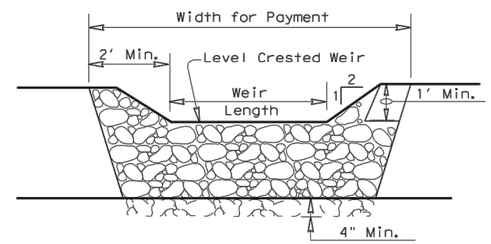


## PROFILE

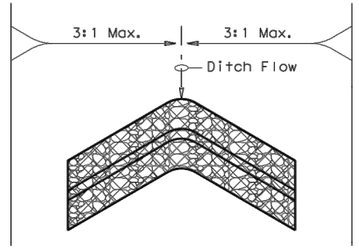


## "V" SHAPE

(Plan View)

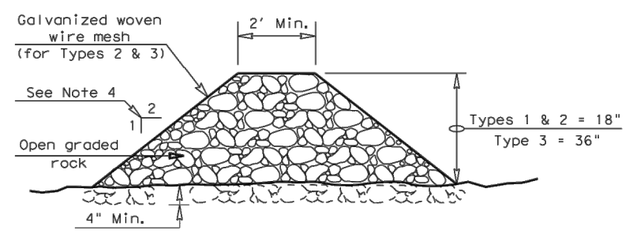


## SECTION C-C

**PLANS SHEET LEGEND**

**Type 1 Rock Filter Dam** — RFD1

**Type 2 Rock Filter Dam** — RFD2

**Type 3 Rock Filter Dam** — RFD3

## GENERAL NOTES

1. If shown on the plans or directed by the Engineer, filter dams should be placed near the toe of slopes where erosion is anticipated, upstream and/or downstream at drainage structures, and in roadway ditches and channels to collect sediment.
2. Materials (aggregate, wire mesh, sandbags, etc.) shall be as indicated by the specification for "Rock Filter Dams for Erosion and Sedimentation Control".
3. The rock filter dam dimensions shall be as indicated on the SW3P plans.
4. Side slopes should be 2:1 or flatter. Dams within the safety zone shall have sideslopes of 6:1 or flatter.
5. Maintain a minimum of 1' between top of rock filter dam weir and top of embankment for filter dams at sediment traps.
6. Filter dams should be embedded a minimum of 4" into existing ground.
7. The sediment trap for ponding of sediment laden runoff shall be of the dimensions shown on the plans.
8. Rock filter dam types 2 & 3 shall be secured with 20 gauge galvanized woven wire mesh with 1" diameter hexagonal openings. The aggregate shall be placed on the mesh to the height & slopes specified. The mesh shall be folded at the upstream side over the aggregate and tightly secured to itself on the downstream side using wire ties or hog rings. In stream use the mesh should be secured or staked to the stream bed prior to aggregate placement.
9. Sack Gabions should be staked down with ¾" dia. rebar stakes.
10. Flow outlet should be onto a stabilized area (vegetation, rock, etc.).
11. The guidelines shown hereon are suggestions only and may be modified by the Engineer.

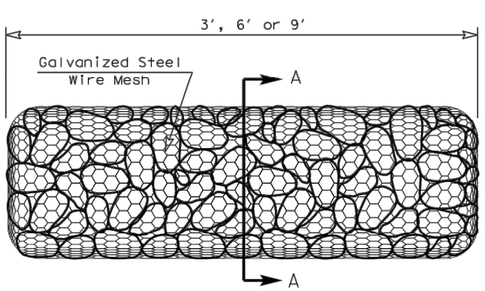


## TYPE 4 (SACK GABIONS)

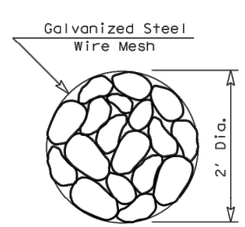


## SECTION A-A

## ROCK FILTER DAM USAGE GUIDELINES

Rock Filter Dams should be constructed downstream from disturbed areas to intercept sediment from overland runoff and/or concentrated flow. The dams should be sized to filter a maximum flow through rate of 60 GPM/FT$^2$ of cross sectional area. A 2 year storm frequency may be used to calculate the flow rate.

Type 1 (18" high with no wire mesh): Type 1 may be used at the toe of slopes, around inlets, in small ditches, and at dike or swale outlets. This type of dam is recommended to control erosion from a drainage area of 5 acres or less. Type 1 may not be used in concentrated high velocity flows (approx. 8 Ft/Sec or more) in which aggregate wash out may occur. Sandbags may be used at the embedded foundation (4" deep min.) for better filtering efficiency of low flows if called for on the plans or directed by the Engineer.

Type 2 (18" high with wire mesh): Type 2 may be used in ditches and at dike or swale outlets.

Type 3 (36" high with wire mesh): Type 3 may be used in stream flow and should be secured to the stream bed.

Type 4 (Sack gabions): Type 4 May be used in ditches and smaller channels to form an erosion control dam.

Texas Department of Transportation — Design Division Standard

# TEMPORARY EROSION, SEDIMENT AND WATER POLLUTION CONTROL MEASURES

## ROCK FILTER DAMS

## EC(2)-93

| FILE: ec293.dgn | DN: TxDOT | CK: HEJ | DW: BD | CK: |
|---|---|---|---|---|
| © TxDOT June 1993 | CONT | SECT | JOB | HIGHWAY |
| REVISIONS | | | | |
| | DIST | COUNTY | | SHEET NO. |
| | WACO | MCLENNAN | | 77 |

DATE:
FILE:

DISCLAIMER:
The use of this standard is governed by the "Texas Engineering Practice Act". No warranty of any kind is made by TxDOT for any purpose whatsoever. TxDOT assumes no responsibility for the conversion of this standard to other formats or for incorrect results or damages resulting from its use.

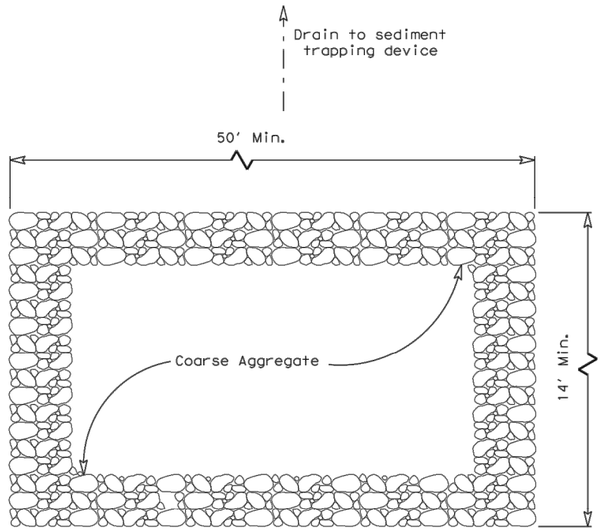


PLAN

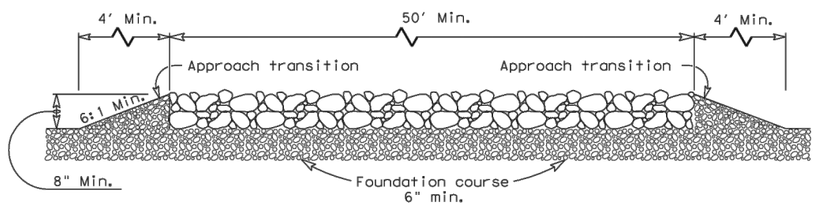


PROFILE

## CONSTRUCTION EXIT (TYPE 1)

### GENERAL NOTES

1. The length of the type 1 construction exit shall be as indicated on the plans, but not less than 50'.
2. The coarse aggregate should be open graded with a size of 4" to 8".
3. The approach transitions should be no steeper than 6:1 and constructed as directed by the Engineer.
4. The construction exit foundation course shall be flexible base, bituminous concrete, portland cement concrete or other material as approved by the Engineer.
5. The construction exit shall be graded to allow drainage to a sediment trapping device.
6. The guidelines shown hereon are suggestions only and may be modified by the Engineer.

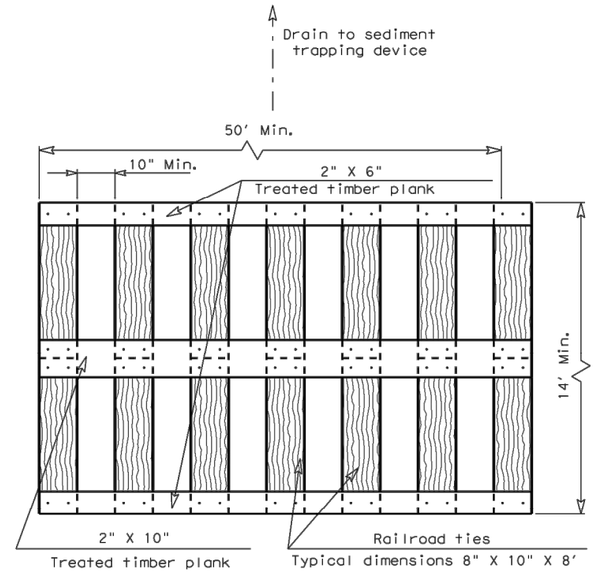


PLAN

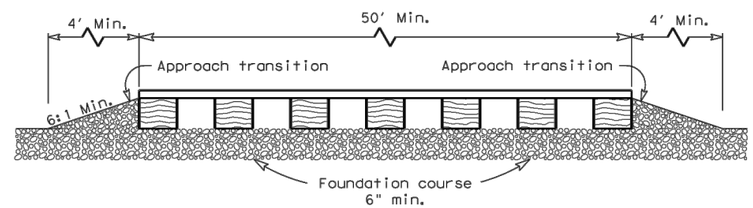


PROFILE

## CONSTRUCTION EXIT (TYPE 2)

### GENERAL NOTES

1. The length of the type 2 construction exit shall be as indicated on the plans, but not less than 50'.
2. The treated timber planks shall be attached to the railroad ties with ½"x 6" min. lag bolts. Other fasteners may be used as approved by the Engineer.
3. The treated timber planks shall be #2 grade min., and should be free from large and loose knots.
4. The approach transitions shall be no steeper than 6:1 and constructed as directed by the Engineer.
5. The construction exit foundation course shall be flexible base, bituminous concrete, portland cement concrete or other material as approved by the Engineer.
6. The construction exit should be graded to allow drainage to a sediment trapping device.
7. The guidelines shown hereon are suggestions only and may be modified by the Engineer.

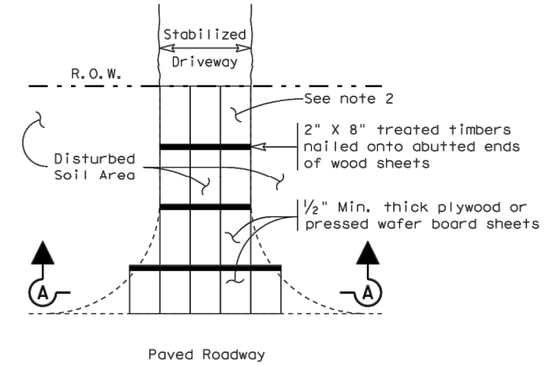


PLAN

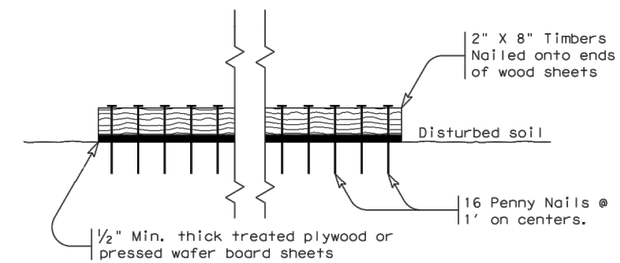


SECTION A-A

## CONSTRUCTION EXIT (TYPE 3)

### GENERAL NOTES

1. The length of the type 3 construction exit shall be as shown on the plans, or as directed by the Engineer.
2. The type 3 construction exit may be constructed from open graded crushed stone with a size of two to four inches spread a min. of 4" thick to the limits shown on the plans.
3. The treated timber planks shall be #2 grade min., and should be free from large and loose knots.
4. The guidelines shown hereon are suggestions only and may be modified by the Engineer.

Texas Department of Transportation — Design Division Standard

# TEMPORARY EROSION, SEDIMENT AND WATER POLLUTION CONTROL MEASURES

## CONSTRUCTION EXITS

## EC(3)-93

| FILE: ec393.dgn | DN: TxDOT | CK: HEJ | DW: BD | CK: |
|---|---|---|---|---|
| © TxDOT June 1993 | CONT | SECT | JOB | HIGHWAY |
| REVISIONS | | | | |
| | DIST | COUNTY | | SHEET NO. |
| | WACO | MCLENNAN | | 78 |

DATE:
FILE: