CITY OF WACO
TEXAS

MANUAL
OF
STANDARD DETAILS

Published By

PUBLIC WORKS DEPARTMENT

ENGINEERING DIVISION

401 FRANKLIN AVE.
WACO, TEXAS 76701
(254) 750-5440
(254) 750-6641 FAX

REVISED APRIL 15, 2015

STANDARD DETAILS			PAGE 1
SHEET #	SHEET TITLE		
	TABLE OF CONTENTS		
~ *WATER* ~		COMMENTS	REVISED
W–1	General Notes & Service Tap Notes		9/3/2014
W–2	Fire Hydrant Setting		9/3/2014
W–2A	Fire Hydrant Setting Alternative		9/3/2014
W–3	Bend & Horizontal Blocking		9/3/2014
W–4	Valve Box & Extension Installation		9/3/2014
W–5	Railroad Crossing Bore		9/3/2014
W–6	Bore Detail		9/3/2014
W–7	Pipe Through Casing		9/3/2014
W–8	Air Release Valve & Manhole Vault (Off Street)		9/3/2014
W–9	Air Release Valve & Manhole Vault (In Street)		9/3/2014
W–10	Vertical Bend		9/3/2014
W–11	Ring Connection		9/3/2014
W–12	Leak Detector Double Check Valve Meter & Vault		9/3/2014
W–13	Water Main – Bullhead Meter Connection		9/3/2014
W–13A	Valve Box		9/3/2014
W–13B	Valve Box Cover		9/3/2014
W–13C	Commercial Bullhead Meter 1 1/2" & 1"		9/3/2014
W–14	Typ. Residential Meter Service Connection		9/3/2014
W–14A	Typ. Commercial or Lg. Residential Meter Service Connection		9/3/2014
W–14B	Typ. Manifold – Meter Service Connection		9/3/2014
W–15	Meter Vault & Lid Notes		9/3/2014
W–16	PRV Assembly on New or Existing Main		9/3/2014
W–16A	PRV Notes		9/3/2014
W–17	PRV Assembly on Existing Main		9/3/2014
W–18	RPZ & Vault		9/3/2014
W–20	Typ. Meter Detail for 2 in. & Larger		9/3/2014
W–21	Dead End Water Main Automatic Flushing Valve		9/3/2014
W–22	Blow–Off Assembly		9/3/2014
W–23	Embedment for New Water Line Crossing Existing Sewer Line		9/3/2014
~ *SEWER* ~			
S–1	Sewer Service Notes		9/3/2014
S–2	Manhole Notes		9/3/2014
S–3	Sewer Service Residential/10" Diameter Cleanout Box		9/3/2014
S–3A	Existing Sewer Service Commercial		9/3/2014
S–3B	Cleanout Cover Traffic Areas		9/3/2014
S–4	Embedment–New Sewer Crossing Under New or Ex. Water		9/3/2014
S–4A	Embedment–New Sewer Crossing on Top of New or Ex. Water		9/3/2014
S–6	Precast Reinforced Concrete Manhole		9/3/2014
S–7	Manhole Configuration		9/3/2014
S–7A	Manhole in Undeveloped Areas		9/3/2014
S–8	MH Ring & Cover – Watertight/Airtight MH Ring & Cover		9/3/2014
S–8A	Watertight/Airtight MH Ring & Cover		9/3/2014
S–9	Internal Drop Fixture		9/3/2014
S–9A	Drop Fixture Anchor		9/3/2014
S–10	External Drop Fixture		9/3/2014
S–11	Lift Station Section View		9/3/2014
S–11A	Lift Station Plan View		9/3/2014
S–12	Manhole Abandonment		9/3/2014
S–13	End of Line Sweeping Cleanout	New detail	
~ *STREET* ~			
ST–1	General Notes		9/3/2014
ST–2	Street Section		9/3/2014
ST–3	Typ. Plan – Concrete Pavement		9/3/2014
ST–4	Curb Details for Concrete Street		9/3/2014
ST–5	Expansion Joint – Longitudinal Construction Joint		9/3/2014
ST–6	Tranverse Joint		9/3/2014
ST–7	MH Cover & Water Valve Cover Blockout Plan		9/3/2014
ST–8	Standard Curb & Gutter		9/3/2014
ST–9	Direct Flow – Laydown Curb & Gutter		9/3/2014
ST–9A	Mountable Curb		9/3/2014
ST–9B	Ribbon & Valley Curb		9/3/2014

STANDARD DETAILS			PAGE 2
SHEET #	SHEET TITLE		
~ STREETS ~		COMMENTS	REVISED
ST-10	Standard Drive Approach		9/3/2014
ST-11	Street Tie-In New Drive Approach & Street-Standard Valley		9/3/2014
ST-12	Concrete Curb & Gutter Fillet		9/3/2014
ST-13	General Notes - Metal Beam Guard Fence		9/3/2014
ST-14	Standard Guardrail		9/3/2014
ST-15	Steel Post		9/3/2014
ST-16	Terminal Concrete Anchor Options		9/3/2014
ST-17	Post Connection Steel Post - Spacer - Rail Splice		9/3/2014
ST-18	Low Fill Culvert Post Mounting Option		9/3/2014
ST-19	Connector Details		9/3/2014
ST-20	Section Thru Guard Rail - Elevation of Nominal 12.5' Guard Rail		9/3/2014
ST-21	Standard Alley Section		9/3/2014
ST-22	Typical Median - Traffic Island Curb		9/3/2014
~ SIDEWALKS ~			
SW-1	Standard Sidewalk General Notes		9/3/2014
SW-2	Typical Back of Sidewalks		9/3/2014
SW-3	Typical Sidewalk Treatment at New Driveways		9/3/2014
SW-5	Typical Mid Block Ramp		9/3/2014
SW-6	Standard Type 1 Curb Ramp Combination		9/3/2014
SW-7	Standard Type 2 Curb Ramp Combination Flush Landing		9/3/2014
SW-8	Standard Type 3 Curb Ramp		9/3/2014
SW-9	Pedestrian Medallion Paths General Notes		9/3/2014
SW-9A	Pedestrian Medallion Paths General Notes		9/3/2014
SW-10	Pedestrian Medallion Paths Legend		9/3/2014
SW-11	Pedestrian Medallion Paths in Non-Traffic Areas		9/3/2014
SW-12	Ped. Brick Medallion Paths Concrete Areas including Drives		9/3/2014
SW-13	Pedestrian Medallion Paths Spacing		9/3/2014
SW-14	Pedestrian Concrete Paths in Non-Traffic Areas		9/3/2014
SW-15	Ped. Brick Paver Medallion Paths Asphalt Areas including Drives		9/3/2014
SW-16	Tree Grate Detail		9/3/2014
SW-17	Ped. Brick Paver Paths Concrete Areas including Drives		9/3/2014
SW-18	TXDot Ped-12A - Curb Ramps		TXDOT 6/2012
SW-19	TXDot Ped-12A - Curb Ramps-Detectable Warnings		TXDOT 6/2012
~ STORM DRAIN ~			
D-1	Drainage Notes		9/3/2014
D-2	Standard Inlet - Plan View		4/15/2015
D-3	Standard Inlet - Front Section View		4/15/2015
D-4	Standard Inlet - Side Section C-C View		9/3/2014
D-5	Standard Recessed Inlet - Plan View		4/15/2015
D-6	Standard Recessed Inlet - Section View		9/3/2014
D-7	Standard Inlet Trough		9/3/2014
D-8	Concrete Collar for Storm Drain Pipe Field Connection		9/3/2014
D-9	Inlet Ring & Cover		9/3/2014
D-10	Standard Storm Sewer Manhole Section		9/3/2014
D-11	Standard Storm Sewer Manhole Top Slab		9/3/2014
D-12	Top Slab Deep Storm Sewer Manhole		9/3/2014
D-13	Deep Storm Sewer Manhole		9/3/2014
D-14	Concrete Lined Channel		9/3/2014
D-15	Standard Flared Reinforced Concrete Headwall		4/15/2015
D-16	Standard Parallel Reinforced Concrete Headwall		4/15/2015
D-17	Precast Safety End Treatment Parallel Drainage		TXDOT 5/2005
D-18	Precast Safety End Treatment Cross Drainage		TXDOT 5/2005

SHEET #	SHEET TITLE		
	~ GENERAL ~	COMMENTS	REVISED
G-1	Storm Water Pollution Prevention – General Notes		9/3/2014
G-1A	Silt Fence & Stone Overflow Structure		9/3/2014
G-2	Typical Rock Berm		9/3/2014
G-3	Curb Inlet Drain Filter		9/3/2014
G-3A	Stone Outlet Sediment Trap		9/3/2014
G-3B	Stabilized Construction Entrance		9/3/2014
G-4	Standard Embedment – Concrete Encasement		9/3/2014
G-5	Surface Replacement Details		9/3/2014
G-6	Concrete Cylinder for Benchmarks		9/3/2014
G-8	Trench Embedment Guidelines		9/3/2014
G-9	Delineator Post Detail		9/3/2014
G-10	General Concrete & Reinforcement Notes		9/3/2014
G-11	Construction Material Lab Testing Matrix – 1 of 3	New detail	
G-11A	Construction Material Lab Testing Matrix – 2 of 3	New detail	
G-11B	Construction Material Lab Testing Matrix – 3 of 3	New detail	
	~ TRAFFIC ~		
T-1	Traffic Control Plans – General		9/3/2014
T-2	Antique-Shoebox Light & LED		9/3/2014
T-2A	Antique-Shoebox Light & LED		9/3/2014
T-2B	Antique-Shoebox Light & LED		9/3/2014
T-3	Antique Street Light Reinforced Foundation		9/3/2014
T-4	Shoe Box Street Light Reinforced Foundation		9/3/2014
T-5	Street Light Foundation Placement		9/3/2014
T-6	Electrical Pullbox Installation		9/3/2014
T-7	Roadway Lighting Layout Detail		9/3/2014
T-8	Milbank Service Pedestal		9/3/2014
T-9	Concrete Sign Anchor Installation		9/3/2014
T-10	Roundabout Curb Details		9/3/2014

CITY OF WACO

WATER DETAILS

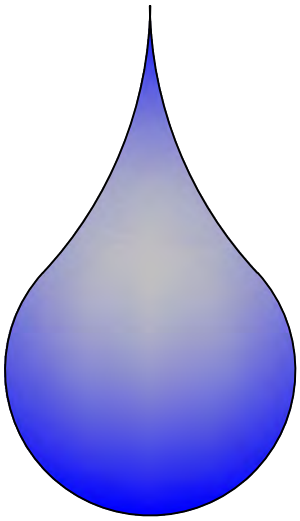

GENERAL NOTES

1. ALL WATER LINES SHALL BE COMPLETE IN PLACE INCLUDING ALL BENDS, BLOCKS, FITTINGS, SERVICES AND APPURTENANCES BEFORE PRESSURE TESTING.
2. SURFACE REPLACEMENT SHALL BE INCLUDED IN THE UNIT PRICE FOR WATER SERVICES.
3. PLACE METALLIC LOCATOR TAPE APPROXIMATELY 1'-0" ABOVE WATER LINE AND CONNECT TO EACH SERVICE, VALVE AND FIRE HYDRANT.
4. ALL DUCTILE IRON WATER PIPE AND FITTINGS MUST BE POLY-WRAPPED PER CITY SPECIFICATIONS.
5. STAMP A "W" IN CURB FACE AT ALL SERVICE LOCATIONS ON NEW CONSTRUCTION.
6. ALL COPPER PIPE MUST BE TYPE K-SOFT.
7. ALL SUBSTITUTIONS FOR USE AS AN APPROVED EQUAL MUST BE SUBMITTED IN WRITING, AND APPROVED, IN ADVANCE, IN ACCORDANCE WITH THE CURRENT VERSION OF THE CITY OF WACO STANDARD SPECIFICATIONS FOR CONSTRUCTION.
8. ANY DEVIATION FROM STANDARD DETAILS MUST BE SUBMITTED AND APPROVED IN WRITING BY CITY OF WACO ENGINEER.
9. THE FOLLOWING DETAILS HAVE BEEN DELETED FROM STANDARD WATER DETAILS: W-19, TYPICAL DETAIL FOR METER VAULT WITH BOTTOM SLAB DETAIL.

SERVICE TAP NOTES

1. WHERE NEW WATER SERVICES ARE INSTALLED UNDER EXISTING CURB AND GUTTER, THE CONTRACTOR WILL HAVE THE FOLLOWING OPTIONS:

   A. REMOVE AND REPLACE ADEQUATE AMOUNT OF CURB AND GUTTER.
   B. PLACE FLOWABLE BACKFILL BENEATH THE EXISTING CURB AND GUTTER.
   C. INSTALL SERVICE THROUGH A HOLE AT THE SAME LOCATION AS THE EXISTING PIPE, AND APPROXIMATELY THE SAME DIAMETER AS THE EXISTING PIPE.

2. ALL SERVICE TAPS MUST BE MADE UNDER PRESSURE AND FLUSHED, OR TAPPED, AND A SWAB PULLED THOUGH THE MAIN BEFORE PUTTING THE LINE IN SERVICE.
3. 1 1/2" AND 2" METERS MUST BE BROUGHT TO THE WATER OFFICE TO BE TESTED. 3" AND ABOVE ARE TESTED IN THE FIELD BEFORE SERVICE IS APPROVED.
4. ALL EXTERNAL NUTS, BOLTS AND WASHERS WILL BE STAINLESS STEEL.
5. CONTRACTOR MAY SUPPLY ANY OF THE MATERIALS SPECIFIED OR OFFER AN EQUIVALENT. THE CITY OF WACO WILL REVIEW SUCH REQUESTS IN ACCORDANCE WITH GENERAL PROVISIONS, SECTION 5.1 F, TRADE NAMES OR EQUALS.
6. ALL SERVICE TAPS MUST BE APPROVED IN ADVANCE BY THE CITY OF WACO AND MUST BE PERFORMED UNDER THE DIRECT SUPERVISION OF A DESIGNATED CITY OF WACO UTILITY INSPECTOR. A MINIMUM OF 24 HOURS NOTICE MUST BE GIVEN.
7. BURIED BRASS FITTINGS MUST COMPLY WITH CURRENT REGULATIONS.

NOTE: ON OPEN DITCH STREET, FIRE HYDRANT SHALL BE PLACED ON THE TOP BANK BACKSIDE OF DITCH.

NOTES:

FIRE HYDRANT TO BE INSTALLED ACCORDING TO MANUFACTURERS SPECIFICATIONS. CONTRACTOR TO REMOVE CHAINS FROM F.H. CAPS.

VALVE IS REQUIRED TO BE POSITIONED AS CLOSE TO TEE AS POSSIBLE.

MAINS VARY IN SIZE – REFER TO BLOCKING DETAIL.

NOTE:
6" X 6" GRADELOK WILL BE REQUIRED IN MOST CASES; HOWEVER, CONTRACTOR MAY USE A 6" X 12" GRADELOK TO ACCOMMODATE SITE CONDITIONS. IN ADDITION TO THE REQUIRED 6" X 6" GRADELOK, 45° BENDS MAY BE USED TO ACCOMMODATE SITE CONDITIONS. EXTENSIONS WILL NOT BE ALLOWED.

ALL FITTINGS ON FIRE HYDRANT LEAD TO BE EBBA MEGALUG RETAINER GLANDS OR APPROVED EQUAL.

LEAD SHALL BE D.I.P. IN ALL CASES, SHALL BE 6" MIN, AND SHALL BE POLY WRAPPED.

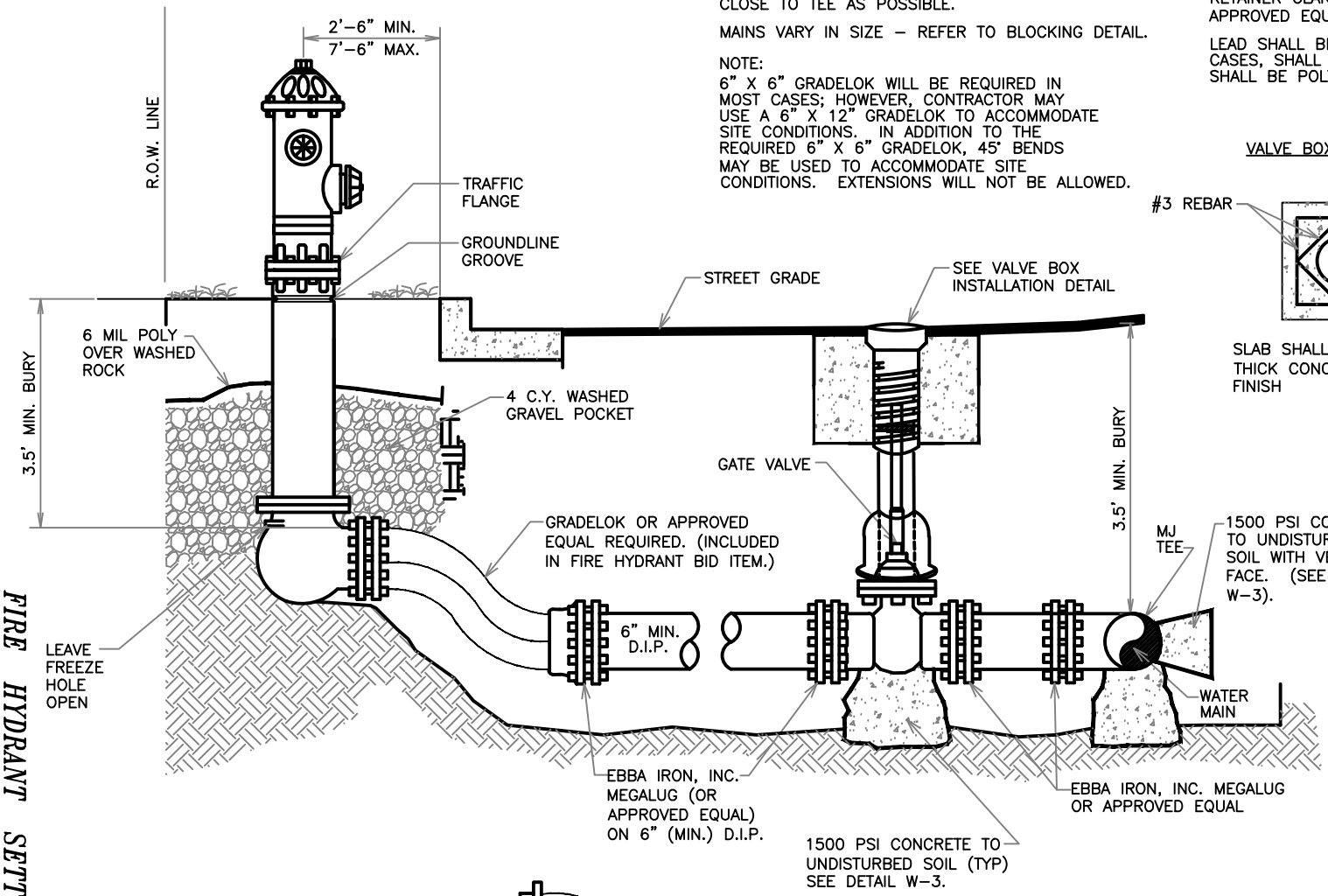

VALVE BOX PLAN VIEW

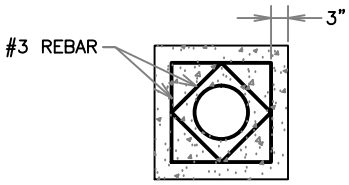

SLAB SHALL BE 18"x18"x6" THICK CONCRETE W/BROOM FINISH

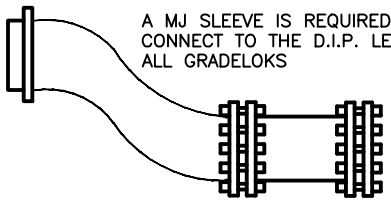

A MJ SLEEVE IS REQUIRED TO CONNECT TO THE D.I.P. LEAD ON ALL GRADELOKS

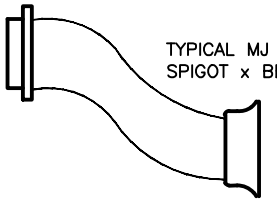

TYPICAL MJ GRADELOK SPIGOT x BELL

FIRE HYDRANT SETTING DETAILS
(NO SCALE)

FIRE HYDRANT SETTING DETAILS
(NO SCALE)

W–2

WACO

ENGINEERING SERVICES

REVISIONS

NO.	COMMENTS	BY	DATE
04	REMOVE SEAL	DG	09/03/2014
03	ADD VALVE BOX PLAN VIEW WITH #3 REBAR	DG	02/01/2013
02	UPDATED	JS	03/19/2010
01	UPDATED	DG/CA	07/03/2009

BOOK PAGE NUMBER 0000

DATE 09/03/2014

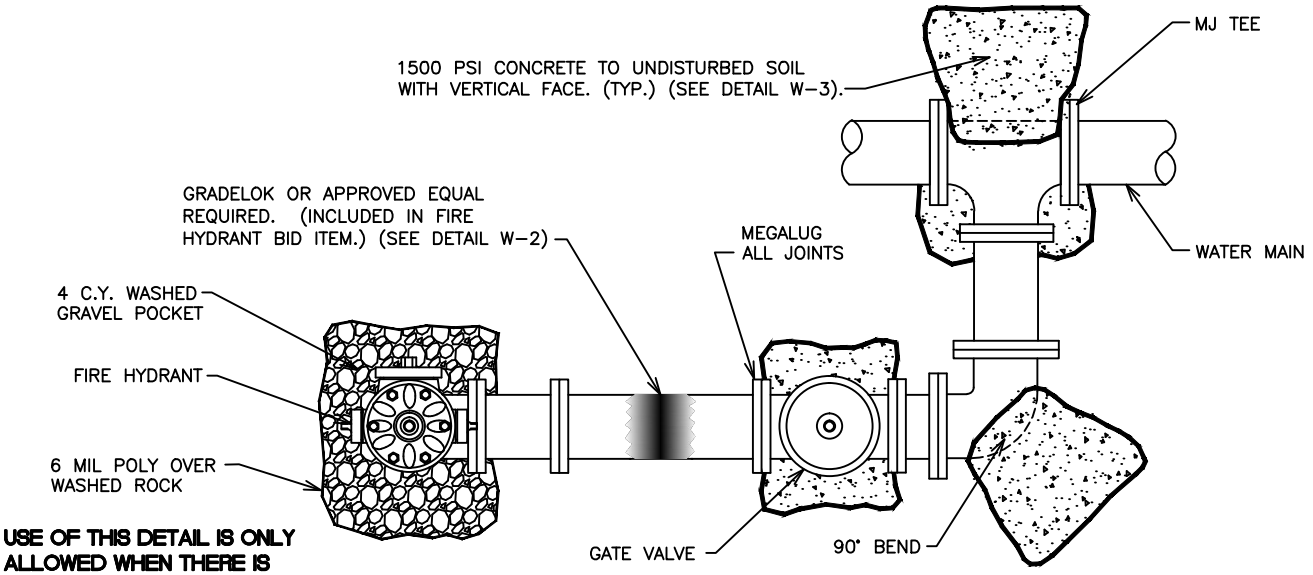

USE OF THIS DETAIL IS ONLY ALLOWED WHEN THERE IS INSUFFICIENT ROOM TO USE DETAIL W-2.

PLAN VIEW
(NO SCALE)

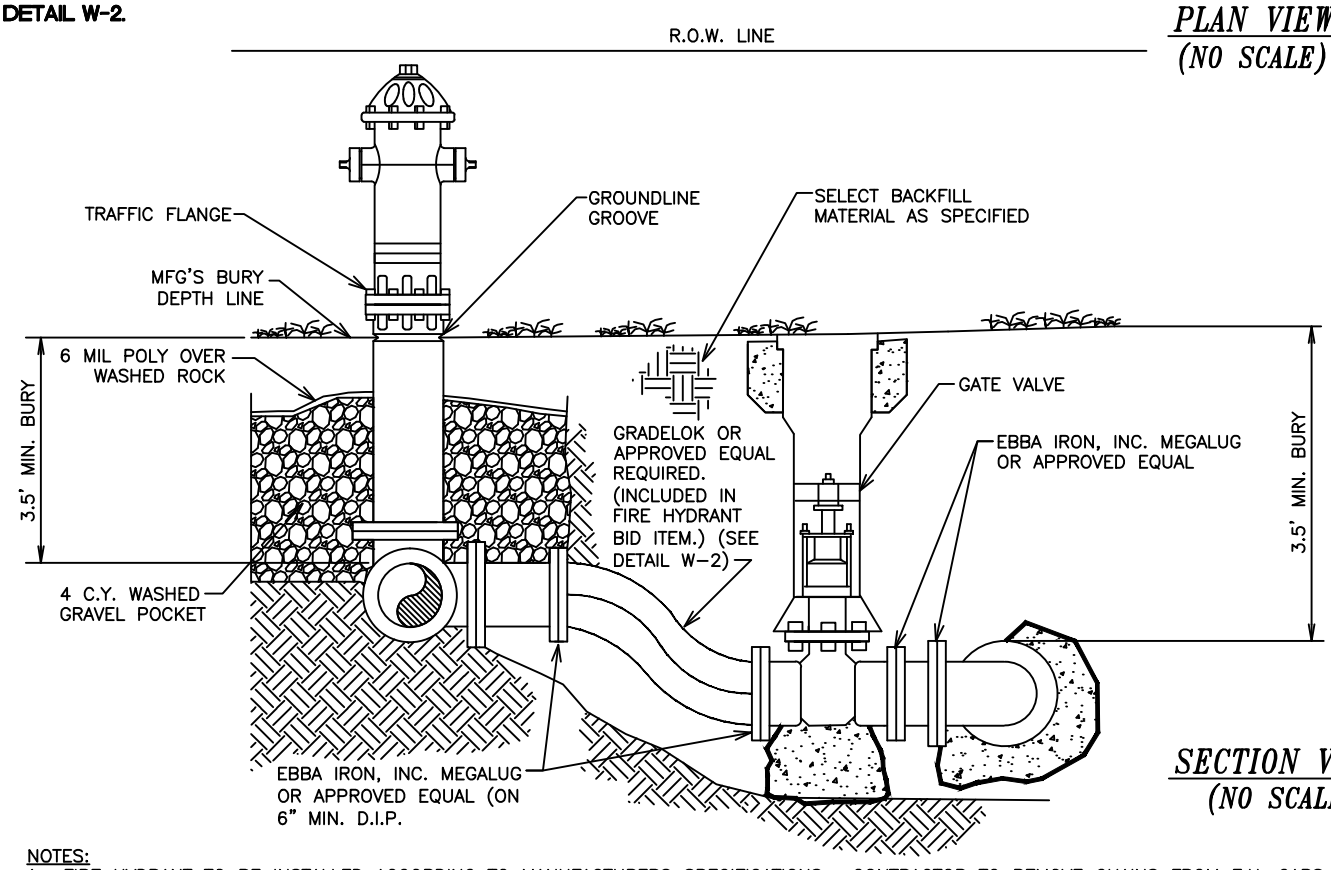

SECTION VIEW
(NO SCALE)

NOTES:
1. FIRE HYDRANT TO BE INSTALLED ACCORDING TO MANUFACTURERS SPECIFICATIONS. CONTRACTOR TO REMOVE CHAINS FROM F.H. CAPS.
2. VALVE IS REQUIRED TO BE POSITIONED AS CLOSE TO TEE AS POSSIBLE.
3. MAINS VARY IN SIZE – REFER TO BLOCKING DETAIL.
4. ON OPEN DITCH STREET, FIRE HYDRANT SHALL BE PLACED ON THE TOP BANK BACKSIDE OF DITCH.
5. ALL FITTINGS ON FIRE HYDRANT LEAD NEED TO BE EBBA IRON, INC. MEGALUG RETAINER GLANDS OR APPROVED EQUAL.
6. LEAD SHALL BE D.I.P. IN ALL CASES, SHALL BE 6" MIN. AND SHALL BE POLY WRAPPED.
7. 6" X 6" GRADELOK WILL BE REQUIRED IN MOST CASES; HOWEVER, CONTRACTOR MAY USE A 6" X 12" GRADELOK TO ACCOMMODATE SITE CONDITIONS. IN ADDITION TO THE REQUIRED 6" X 6" GRADELOK, 45° BENDS MAY BE USED TO ACCOMMODATE SITE CONDITIONS. EXTENSIONS WILL NOT BE ALLOWED.

FIRE HYDRANT SETTING DETAILS

WACO

ENGINEERING SERVICES

REVISIONS

NO.	COMMENTS	BY	DATE
03	REMOVE SEAL	DG	09/03/2014
02	UPDATED	JS	03/19/2010
01	UPDATED	DG/CA	07/03/2009

BOOK PAGE NUMBER 0000

DATE 09/03/2014

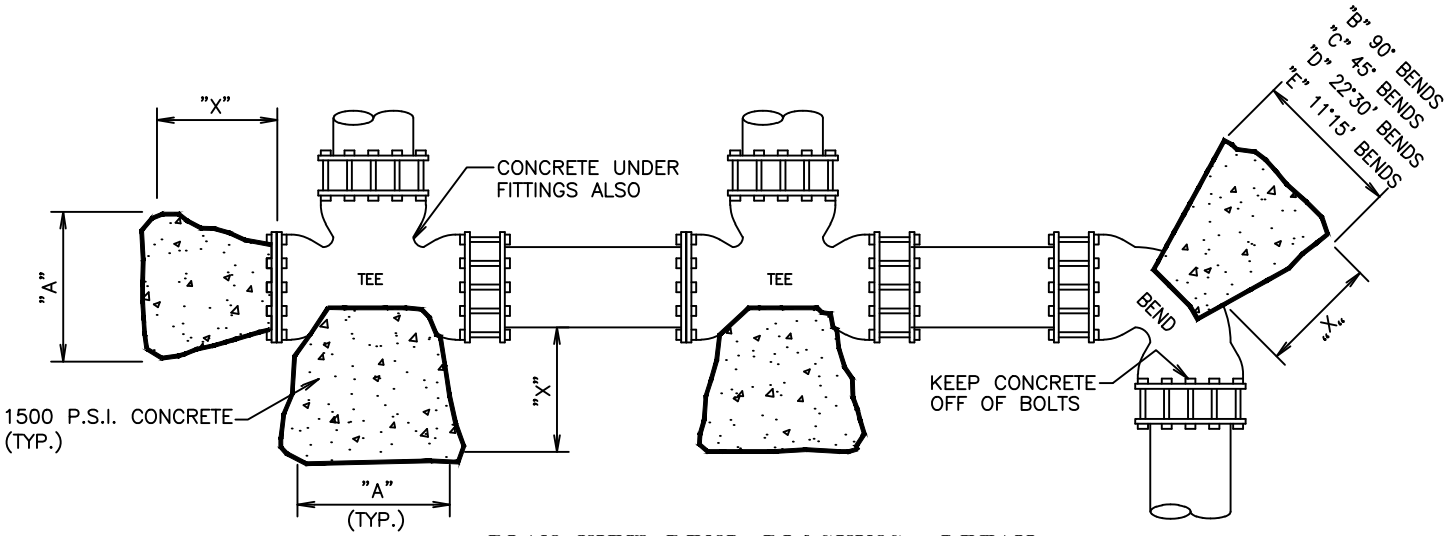

PLAN VIEW BEND BLOCKING DETAIL

(NO SCALE)

DIM "X" TO BE A MIN. OF ONE FT. (1') BUT IS TO BE INCREASED WHERE NECESSARY TO PROVIDE BEARING AGAINST UNDISTURBED TRENCH WALL. CONCRETE SHALL BE PLACED IN A MANNER TO ALLOW ACCESS TO ALL NUTS, BOLTS AND GASKETS. CONCRETE SHALL ALSO EXTEND UNDER FITTINGS TO UNDISTURBED SOIL. NO PRECAST CONCRETE BLOCKS MAY BE USED.

HORIZONTAL BLOCKING TABLE

PIPE SIZE	"X" DIM.	PLUGS & TEES			90° BENDS			45° BENDS			22°30' BENDS			11°15' BENDS		
		"A"	MIN. AREA	MIN. VOL.	"B"	MIN. AREA	MIN. VOL.	"C"	MIN. AREA	MIN. VOL.	"D"	MIN. AREA	MIN. VOL.	"E"	MIN. AREA	MIN. VOL.
4"	1'-0"	1'-0"	0.83	0.05	1'-0"	0.83	0.05	1'-0"	0.83	0.05	1'-0"	0.83	0.05	1'-0"	0.83	0.05
6"	1'-6"	1'-0"	1.06	0.06	1'-2"	1.05	0.09	1'-0"	0.83	0.05	1'-0"	0.83	0.05	1'-0"	0.83	0.05
8"	1'-6"	1'-3"	1.89	0.11	1'-6"	2.66	0.15	1'-3"	1.44	0.08	1'-0"	0.83	0.05	1'-0"	0.83	0.05
10"	1'-6"	1'-9"	2.95	0.17	2'-0"	4.17	0.24	1'-6"	2.26	0.13	1'-3"	1.15	0.07	1'-0"	0.83	0.05
12"	1'-6"	2'-0"	4.25	0.24	2'-3"	6.00	0.34	1'-9"	3.25	0.18	1'-3"	1.65	0.10	1'-0"	0.83	0.05
16"	2'-0"	2'-7"	7.54	0.56	3'-0"	10.65	0.79	2'-3"	5.76	0.43	1'-8"	2.94	0.22	1'-2"	1.48	0.11
18"	2'-0"	2'-11"	7.70	0.57	3'-5"	10.89	0.82	2'-6"	5.89	0.44	1'-10"	3.01	0.22	1'-5"	1.51	0.11
20"	2'-0"	3'-3"	7.86	0.59	3'-9"	11.12	0.84	2'-9"	6.01	0.45	2'-0"	3.07	0.23	1'-7"	1.54	0.12
24"	2'-0"	3'-8"	11.33	0.84	4'-3"	16.00	1.20	3'-2"	8.65	0.65	2'-6"	4.42	0.33	1'-10"	2.22	0.17

NOTE: CALCULATIONS IN MIN. AREA COLUMN ARE IN SQUARE FEET.
CALCULATIONS IN THE MIN. VOLUME COLUMN ARE IN CUBIC YARDS.

HORIZONTAL BLOCKING DETAIL

(NO SCALE)

WACO

ENGINEERING SERVICES

REVISIONS

NO.	COMMENTS	BY	DATE
03	REMOVE SEAL	DG	09/03/2014
02	UPDATED	JS	03/19/2010
01	UPDATED	DG/CA	07/03/2009

BOOK PAGE NUMBER 0000

DATE 09/03/2014

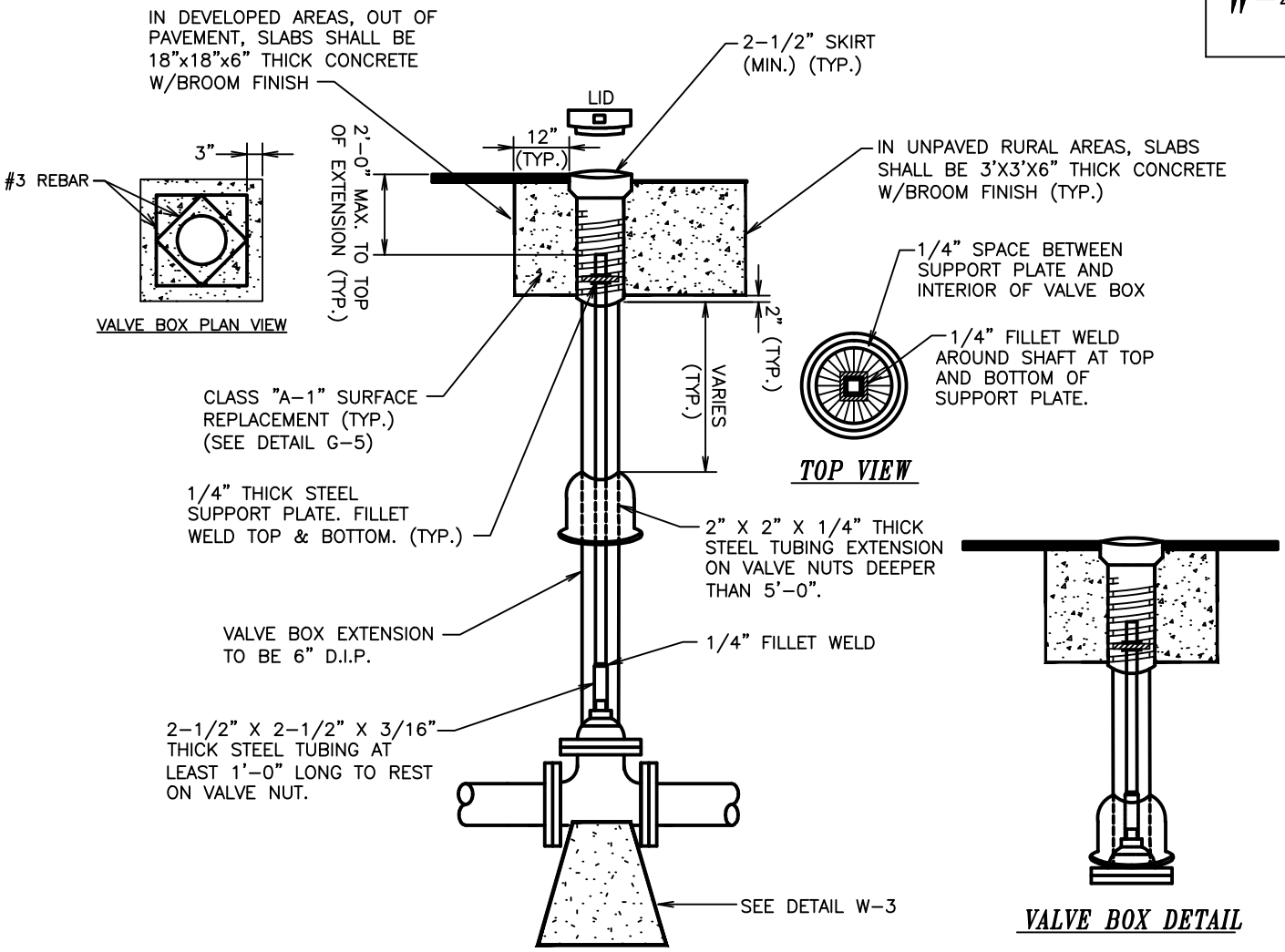

VALVE BOX EXTENSION DETAIL

NOTES: VALVE & VALVE BOX INSTALLATION IN NEW & RECONSTRUCTED STREETS

1. VALVES WILL BE INSTALLED AND LOCATED USING SURFACE REFERENCE POINTS, AND THEN LOWERED BELOW SUBGRADE ELEVATION
2. SUBGRADE WILL BE PLACED AND COMPACTED IN ACCORDANCE WITH SPECIFICATIONS
3. STABILIZED BASE WILL BE PLACED TO GRADE IN ACCORDANCE WITH SPECIFICATIONS
4. SOIL, SUBGRADE, AND STABILIZED BASE OVER VALVE BOX SHALL BE REMOVED AND THE VALVE BOX INSTALLED TO PROPER FINAL ELEVATION
5. ANY EXCAVATED AREA BELOW THE A-1 SURFACE REPLACEMENT SHALL BE FILLED WITH 2000 PSI CONCRETE. CARE SHALL BE EXERCISED IN THE CONCRETE PLACEMENT TO PREVENT ANY VOIDS BELOW OR AROUND THE VALVE BOX
6. PLEASE REFER TO STANDARD DETAIL G-5 FOR CLASS A-1 SURFACE REPLACEMENT

IN UNPAVED RURAL AREAS WITHIN THE RIGHT OF WAY, A 3'x3'x6" THICK REINFORCED (4-#4 EACH WAY) SLAB WILL REPLACE THE CLASS A-1 SURFACE REPLACEMENT NOTED ABOVE. THE SLAB SHALL BE CENTERED ON THE VALVE BOX, HAVE A BROOM FINISH AND SHALL BE PLACED TO GRADE (NOTES: 1-6 DO NOT APPLY).

IN DEVELOPED AREAS OUTSIDE OF THE PAVEMENT, AN 18"x18"x6" THICK REINFORCED (2-#4 EACH WAY) SLAB WILL REPLACE THE CLASS A-1 SURFACE REPLACEMENT NOTED ABOVE. THE SLAB SHALL BE CENTERED ON THE VALVE BOX, HAVE A BROOM FINISH AND SHALL BE PLACED TO GRADE (NOTES: 1-6 DO NOT APPLY).

VALVE BOX AND EXTENSION INSTALLATION DETAILS

(NO SCALE)

WACO

ENGINEERING SERVICES

REVISIONS

NO.	COMMENTS	BY	DATE
04	REMOVE SEAL	DG	09/03/2014
03	ADD VALVE BOX PLAN VIEW WITH #3 REBAR	DG	02/01/2013
02	UPDATED	JS	03/19/2010
01	UPDATED	DG/CA	07/03/2009

BOOK PAGE NUMBER 0000

DATE 09/03/2014

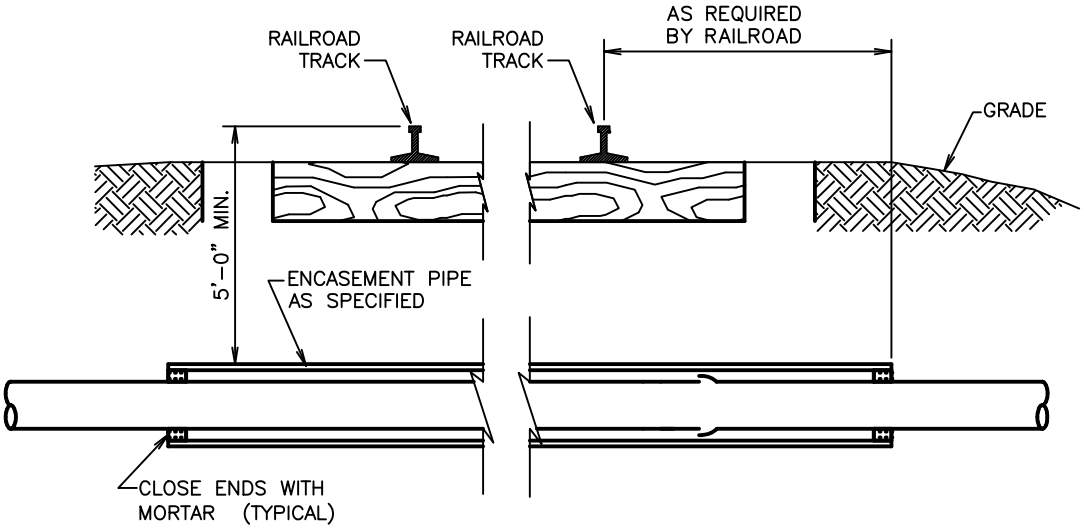

1. MINIMUM NOMINAL SIZE OF CASING SHALL BE LARGE ENOUGH TO ACCOMMODATE THE OD OF BELLS OF THE CARRIER PIPE PLUS 2" UNLESS OTHERWISE REQUIRED BY RAILROAD.

2. CASING SHALL BE STEEL WITH A MINIMUM WALL THICKNESS OF:
   - LESS THAN 1/4" FOR CASINGS UP TO & INCLUDING 18"
   - LESS THAN 3/8" FOR CASINGS LARGER THAN 18", UP TO & INCLUDING 24"
   - LESS THAN 1/2" FOR CASINGS GREATER THAN 24" UP TO & INCLUDING 42"

3. THE MINIMUM THICKNESS FOR ALL CASINGS GREATER THAN 42" DIA. SHALL BE DETERMINED BY THE ENGINEER OF RECORD, AND SUBMITTED FOR REVIEW AND APPROVAL BY THE CITY OF WACO ENGINEERING DEPARTMENT.

3. ALL PIPE IN CASING SHALL HAVE RESTRAINED JOINTS.

4. ALL CASINGS EXPOSED TO THE ATMOSPHERE MUST BE PAINTED PER STANDARD SPECIFICATIONS:
   PRIMER COAT – TNEMEC 161 FASCURE, 6 TO 8 MIL EACH – COLOR – HARVEST 59BR
   SECOND COAT – TNEMEC 161 FASCURE, 6 TO 8 MIL EACH – COLOR – BISQUE 64 BR
   OR APPROVED EQUAL.

RAILROAD CROSSING BORE DETAILS

(NO SCALE)

WACO

ENGINEERING SERVICES

REVISIONS

NO.	COMMENTS	BY	DATE
03	REMOVE SEAL	DG	09/03/2014
02	ADD CASING PAINT SPECS & WALL THICKNESS TO NOTES.	DG	02/01/2013
01	UPDATED	DG/CA	07/03/2009

BOOK PAGE NUMBER 0000

DATE 09/03/2014

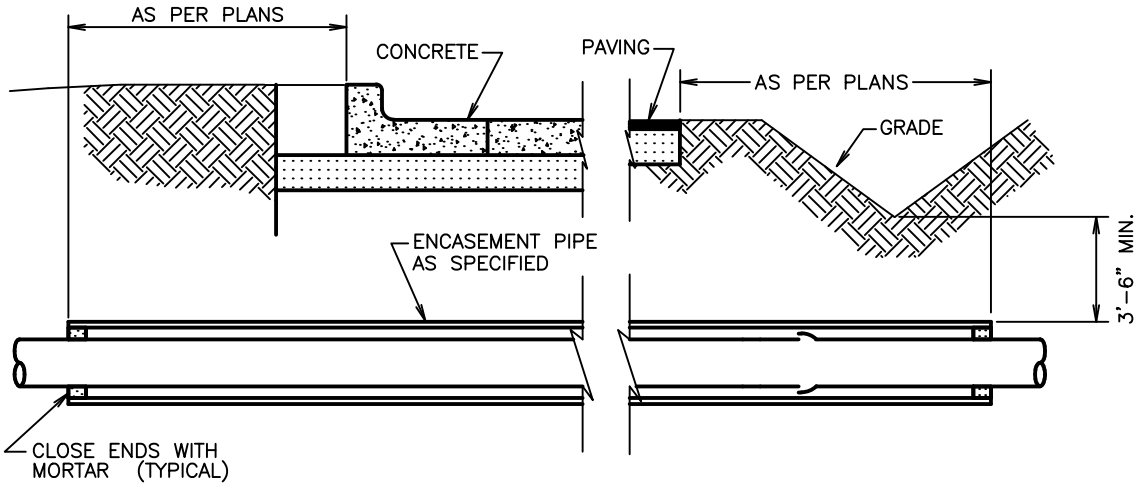

1. MINIMUM NOMINAL SIZE OF CASING SHALL BE LARGE ENOUGH TO ACCOMMODATE THE OD OF BELLS OF THE CARRIER PIPE PLUS 2" UNLESS OTHERWISE REQUIRED BY RAILROAD.

2. CASING SHALL BE STEEL WITH A MINIMUM WALL THICKNESS OF:
   LESS THAN 1/4" FOR CASINGS UP TO & INCLUDING 18"
   LESS THAN 3/8" FOR CASINGS LARGER THAN 18", UP TO & INCLUDING 24"
   LESS THAN 1/2" FOR CASINGS GREATER THAN 24" UP TO & INCLUDING 42"

3. THE MINIMUM THICKNESS FOR ALL CASINGS GREATER THAN 42" DIA. SHALL BE DETERMINED BY THE ENGINEER OF RECORD, AND SUBMITTED FOR REVIEW AND APPROVAL BY THE CITY OF WACO ENGINEERING DEPARTMENT.

3. ALL PIPE IN CASING SHALL HAVE RESTRAINED JOINTS.

4. ALL CASINGS EXPOSED TO THE ATMOSPHERE MUST BE PAINTED PER STANDARD SPECIFICATIONS:
   PRIMER COAT – TNEMEC 161 FASCURE, 6 TO 8 MIL EACH – COLOR – HARVEST 59BR
   SECOND COAT – TNEMEC 161 FASCURE, 6 TO 8 MIL EACH – COLOR – BISQUE 64 BR
   OR APPROVED EQUAL.

BORE DETAIL

(NO SCALE)

WACO

ENGINEERING SERVICES

REVISIONS

NO.	COMMENTS	BY	DATE
03	REMOVE SEAL	DG	09/03/2014
02	ADDED CASING PAINT SPECS. & WALL THICKNESS TO NOTES.	DG	02/01/2013
01	UPDATED	DG/CA	07/03/2009

BOOK PAGE NUMBER
0000

DATE
09/03/2014

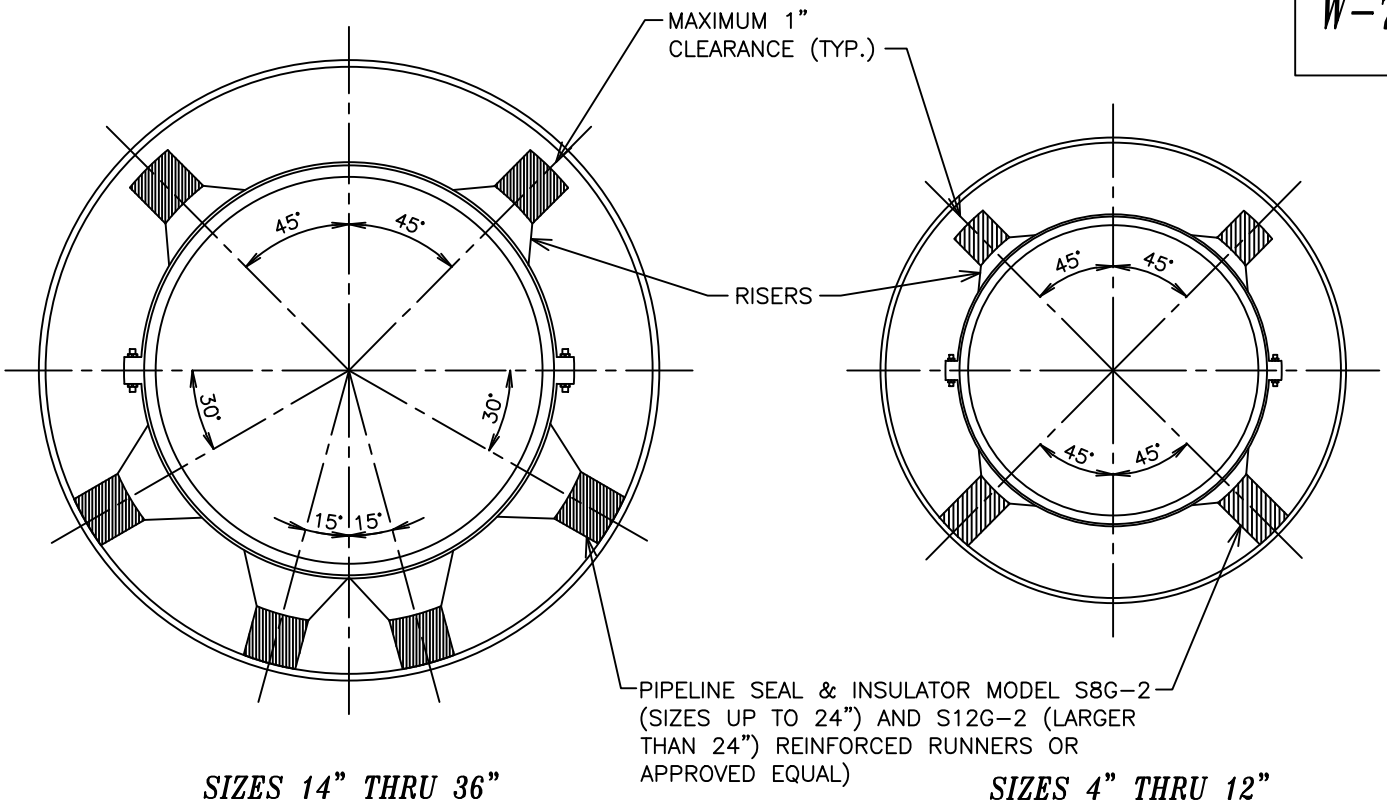

SIZES 14" THRU 36"
(NO SCALE)

SIZES 4" THRU 12"
(NO SCALE)

REQUIRED INSTALLATION PRACTICES FOR PIPE IN CASINGS ARE:

1. BELL MUST MAINTAIN A MINIMUM OF 1" CLEARANCE FROM CASING WALL.
2. THE PIPE MUST BE BRACED AND ANCHORED IN A MANNER THAT PREVENTS MOVEMENT IN ANY DIRECTION.
3. THE PIPE MUST BE INSTALLED IN A MANNER THAT WILL PERMIT IT'S REMOVAL WITH REASONABLE EASE, SHOULD THIS BE NECESSARY AT A LATER DATE.
4. PLACE SPACERS AT NO MORE THAN TWO FEET FROM EACH JOINT AND A MAXIMUM SPACING AS PER MANUFACTURERS RECOMMENDATION.
5. SPACERS MUST BE A MAXIMUM OF 1" FROM CASING WALL.
6. CASING SHALL BE STEEL WITH A MINIMUM WALL THICKNESS OF:
   LESS THAN 1/4" FOR CASINGS UP TO AND INCLUDING 18"
   LESS THAN 3/8" FOR CASINGS LARGER THAN 18", UP TO & INCLUDING 24"
   LESS THAN 1/2" FOR CASINGS GREATER THAN 42", UP TO & INCLUDING 42"
7. THE MINIMUM THICKNESS FOR ALL CASINGS GREATER THAN 42" DIA. SHALL BE DETERMINED BY THE ENGINEER OF RECORD, AND SUBMITTED FOR REVIEW AND APPROVED BY THE CITY OF WACO ENGINEERING DEPARTMENT.
8. ALL CASINGS EXPOSED TO THE ATMOSPHERE MUST BE PAINTED PER STANDARD SPECIFICATIONS:
   PRIMER COAT – TNEMEC 161 FASCURE, 6 TO 8 MIL EACH – COLOR – HARVEST 59BR
   SECOND COAT – TNEMEC 161 FASCURE, 6 TO 8 MIL EACH – COLOR – BISQUE 64BR
   OR APPROVED EQUAL.

PIPE THROUGH CASING DETAIL
(NO SCALE)

WACO

ENGINEERING SERVICES

REVISIONS

NO.	COMMENTS	BY	DATE
05	REMOVE SEAL	DG	09/03/2014
04	ADD CASING PAINT SPECS. & WALL THICKNESS TO NOTES.	DG	02/01/2013
03	UPDATED	JS	03/19/2010

BOOK PAGE NUMBER
0000

DATE
09/03/2014

GENERAL NOTES

1. FRAME AND COVER SHALL BE 30"X 36" 1/4" HINGED CHECKER PLATE.

2.A. WATER: NO SWEATED JOINTS, GALVANIZED OR P.V.C. PIPE WILL BE ACCEPTED. USE BRASS FITTINGS WITH COPPER TUBING, THREADED OR COMPRESSION COUPLINGS.

2.B. WASTEWATER: NO SWEATED JOINTS, GALVANIZED, BRASS, OR COPPER PIPE OR TUBING SHALL BE USED FOR ARV VENT. PRESSURE RATED P.V.C. ONLY.

3. PIPE VENT OPENING SHALL BE 12" ABOVE TOP OF CONCRETE VAULT.

4. CONCRETE VAULT SHALL BE CONCRETE PRODUCTS, INC. MODEL "M.V.-8-H.L." OR APPROVED EQUAL.

5. AIR RELEASE VALVES SHALL BE PLACED IN AREAS NOT SUBJECT TO SUBMERGENCE AND OUTSIDE OF PAVEMENT AREAS.

6. THE PLACEMENT OF VAULT SHALL BE ON CITY RIGHT OF WAY OR WITHIN APPROPRIATE EASEMENTS AND SHALL BE LOCATED IN SUCH A WAY AS TO CAUSE THE LEAST AMOUNT OF SITE DISTURBANCE TO CITIZENS AND TO NO CREATE A SIGHT OBSTRUCTION FOR TRAFFIC.

7. AIR VENT DISCHARGE WILL BE LOCATED AND PROTECTED TO ACCOMMODATE SITE CONDITIONS. BOLLARDS OR ENCLOSURE DESIGN WILL BE SUBMITTED TO CITY OF WACO FOR APPROVAL. VAULT SHALL BE LOCATED AS CLOSE AS POSSIBLE TO PROPERTY LINES.

8. MINIMIZE ANGLES IN VENT PIPE/TUBING, HORIZONTAL LENGTHS TO BE SLOPED DOWN (NOMINAL 2%) TOWARDS ARV.

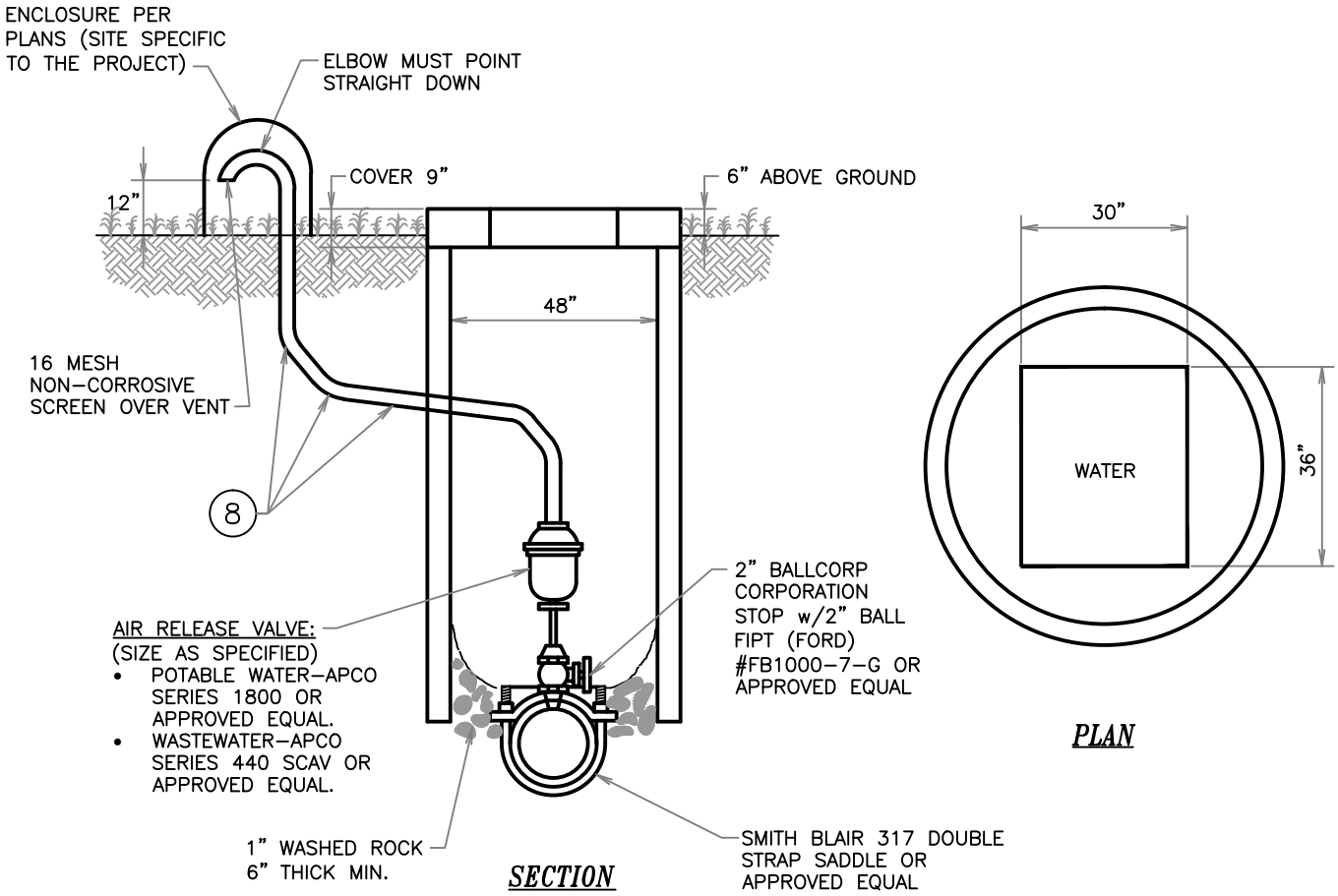

AIR RELEASE VALVE AND MANHOLE VAULT DETAIL (OFF STREET)

(NO SCALE)

WACO

ENGINEERING SERVICES

REVISIONS

NO.	COMMENTS	BY	DATE
08	REMOVE SEAL	DG	09/03/2014
07	REVISE NOTE #8 (GEORGE ACTUALLY SIGNED ON 4-30-2014)	DG	11/18/2013
06	ADDED NOTES 2A, 2B, & 8.	DG	07/22/2013
05	ADDED ENCLOSURE OVER VENT & AIR RELEASE VALVE SPECS.	DG	02/01/2013

BOOK PAGE NUMBER 0000

DATE 09/03/2014

GENERAL NOTES

1. FRAME AND COVER SHALL BE 30"X36" 1/4" HINGED CHECKER PLATE.

2.A. WATER: NO SWEATED JOINTS, GALVANIZED OR P.V.C. PIPE WILL BE ACCEPTED. USE BRASS WITH COPPER TUBING, THREADED OR COMPRESSION COUPLINGS.

2.B. WASTEWATER: NO SWEATED JOINTS, GALVANIZED, BRASS OR COPPER PIPE OR TUBING SHALL BE USED FOR ARV VENT. PRESSURE RATED P.V.C. ONLY.

3. PIPE VENT OPENING SHALL BE 12" ABOVE TOP OF CONCRETE OR GROUND.

4. CONCRETE VAULT SHALL BE CONCRETE PRODUCTS, INC. MODEL "M.V.-48-H.L." OR APPROVED EQUAL.

5. AIR RELEASE VALVES SHALL BE PLACED IN AREAS NOT SUBJECT TO SUBMERGENCE AND OUTSIDE OF PAVEMENT AREAS.

6. THE PLACEMENT OF VAULT SHALL BE ON CITY RIGHT-OF-WAY OR WITHIN APPROPRIATE EASEMENTS AND SHALL BE LOCATED IN SUCH A WAY AS TO CAUSE THE LEAST AMOUNT OF SITE DISTURBANCE TO CITIZENS AND TO NOT CREATE A SIGHT OBSTRUCTION FOR TRAFFIC.

7. IF WATER MAIN IS IN STREET, VAULT WILL BE SET 2' BEHIND CURB AND CORPORATION STOP ADDED AT MAIN. CURB STOP WILL REMAIN IN VAULT.

8. AIR VENT DISCHARGE WILL BE LOCATED AND PROTECTED TO ACCOMMODATE SITE CONDITIONS. BOLLARDS OR ENCLOSURE DESIGN WILL BE SUBMITTED TO CITY OF WACO FOR APPROVAL. VAULT SHALL BE LOCATED AS CLOSE AS POSSIBLE TO PROPERTY LINES.

9. MINIMIZE ANGLES IN VENT PIPE/TUBING, HORIZONTAL SECTIONS TO BE SLOPED DOWN (NOMINAL 2%) TOWARDS ARV.

10. MINIMIZE HORIZONTAL DISTANCE BETWEEN MAIN AND ARV.

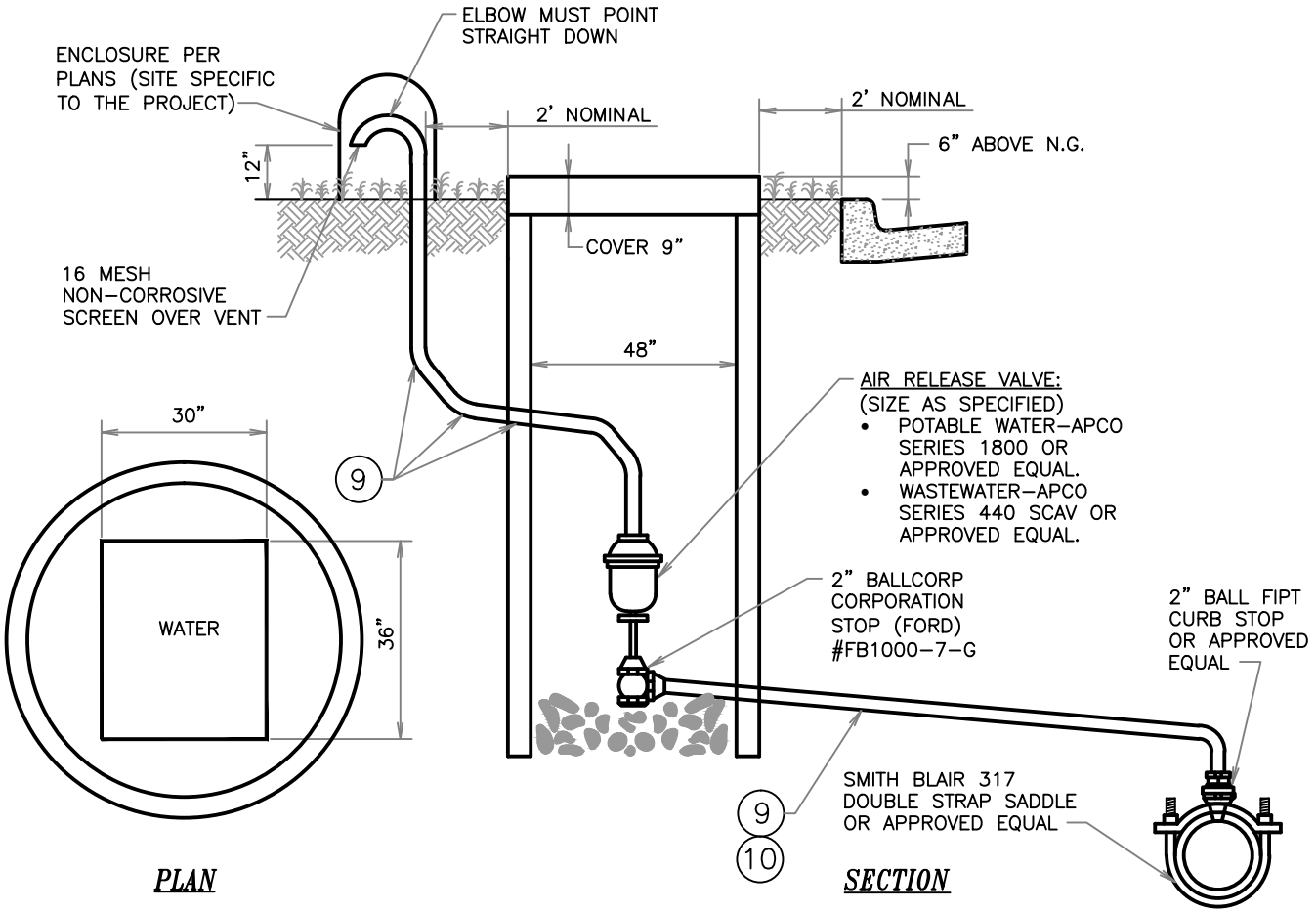

AIR RELEASE VALVE AND MANHOLE VAULT DETAIL (IN STREET)

(NO SCALE)

WACO

ENGINEERING SERVICES

REVISIONS

NO.	COMMENTS	BY	DATE
07	REMOVE SEAL	DG	09/03/2014
06	REVISED NOTE #8 (NOTE #9 REVISED-NOT ISSUED UNTIL 5/2014)	DG	11/18/2013
05	ADDED NOTES 2A, 2B, & 9.	DG	07/22/2013
04	90° BEND TIE-IN MAIN LINE/REMOVE HANDLE FROM LID/ARV SPECS.	DG	02/01/2013

BOOK PAGE NUMBER 0000

DATE 09/03/2014

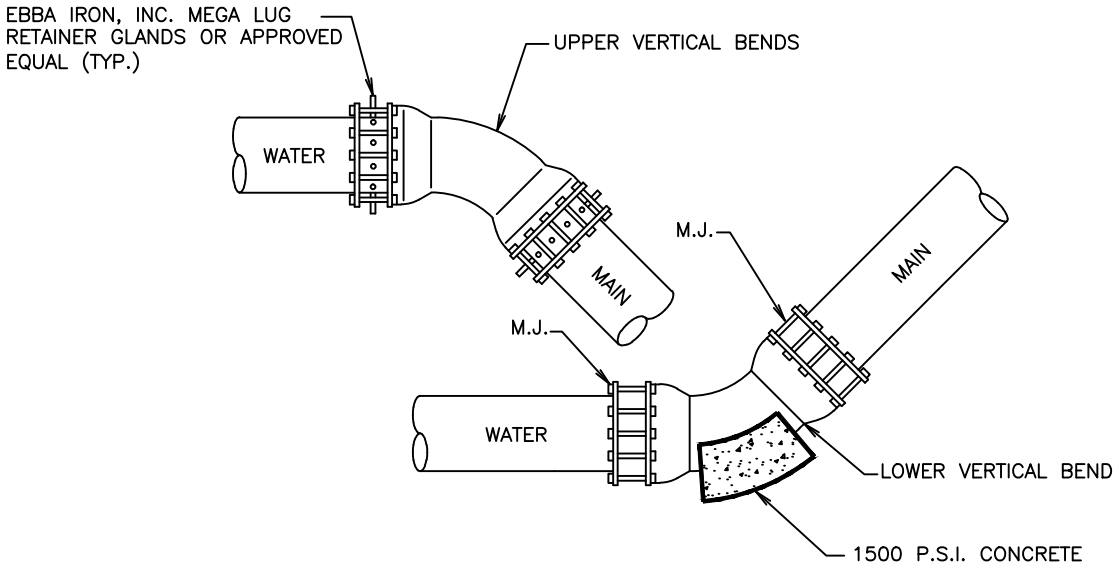

VERTICAL BENDS, SHALL HAVE MEGALUG FITTINGS ON EACH SIDE.

NOTE: SEE HORIZONTAL BLOCKING TABLE ON SHEET W-3

VERTICAL BEND DETAIL

WACO

ENGINEERING SERVICES

REVISIONS

NO.	COMMENTS	BY	DATE
02	REMOVE SEAL	DG	09/03/2014
01	UPDATED	DG/CA	07/03/2009

BOOK PAGE NUMBER 0000

DATE 09/03/2014

NOTES:

1. MINIMUM DIA. OF RING CONNECTION SHALL BE DIA. OF SMALLER MAIN.
2. IF TAPPING SLEEVE AND VALVE IS USED GATE VALVE IS NOT NECESSARY.
3. SEE HORIZONTAL BLOCKING TABLE ON SHT. W-3.

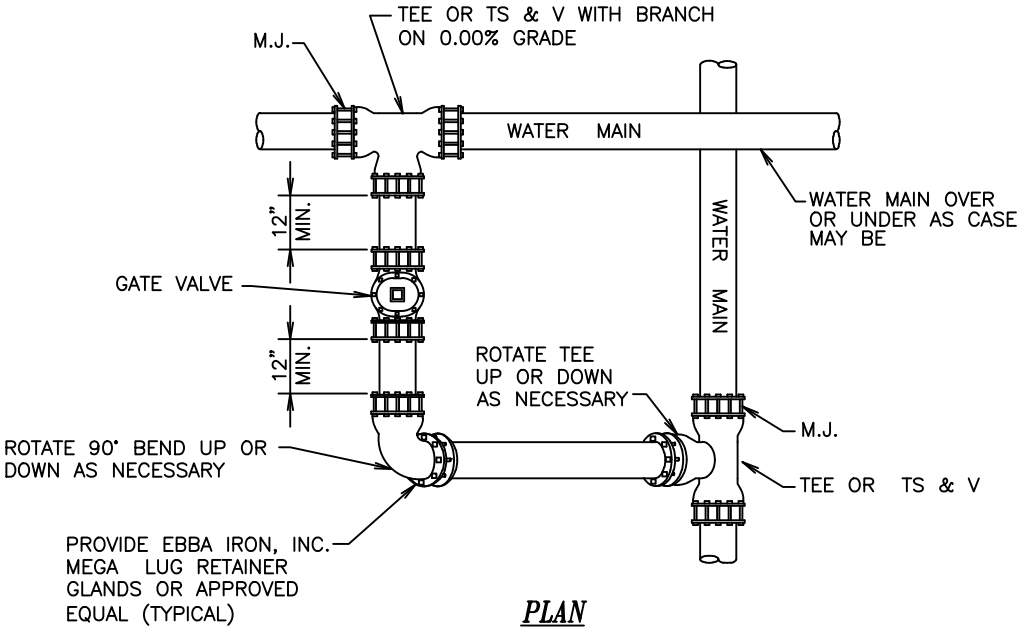

PLAN

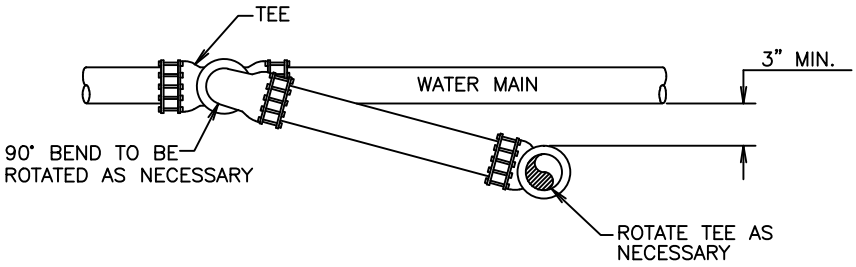

SECTION

RING CONNECTION

(NO SCALE)

WACO

ENGINEERING SERVICES

REVISIONS			
NO.	COMMENTS	BY	DATE
02	REMOVE SEAL	DG	09/03/2014
01	UPDATED	DG/CA	07/03/2009

BOOK PAGE NUMBER 0000

DATE 09/03/2014

W-12

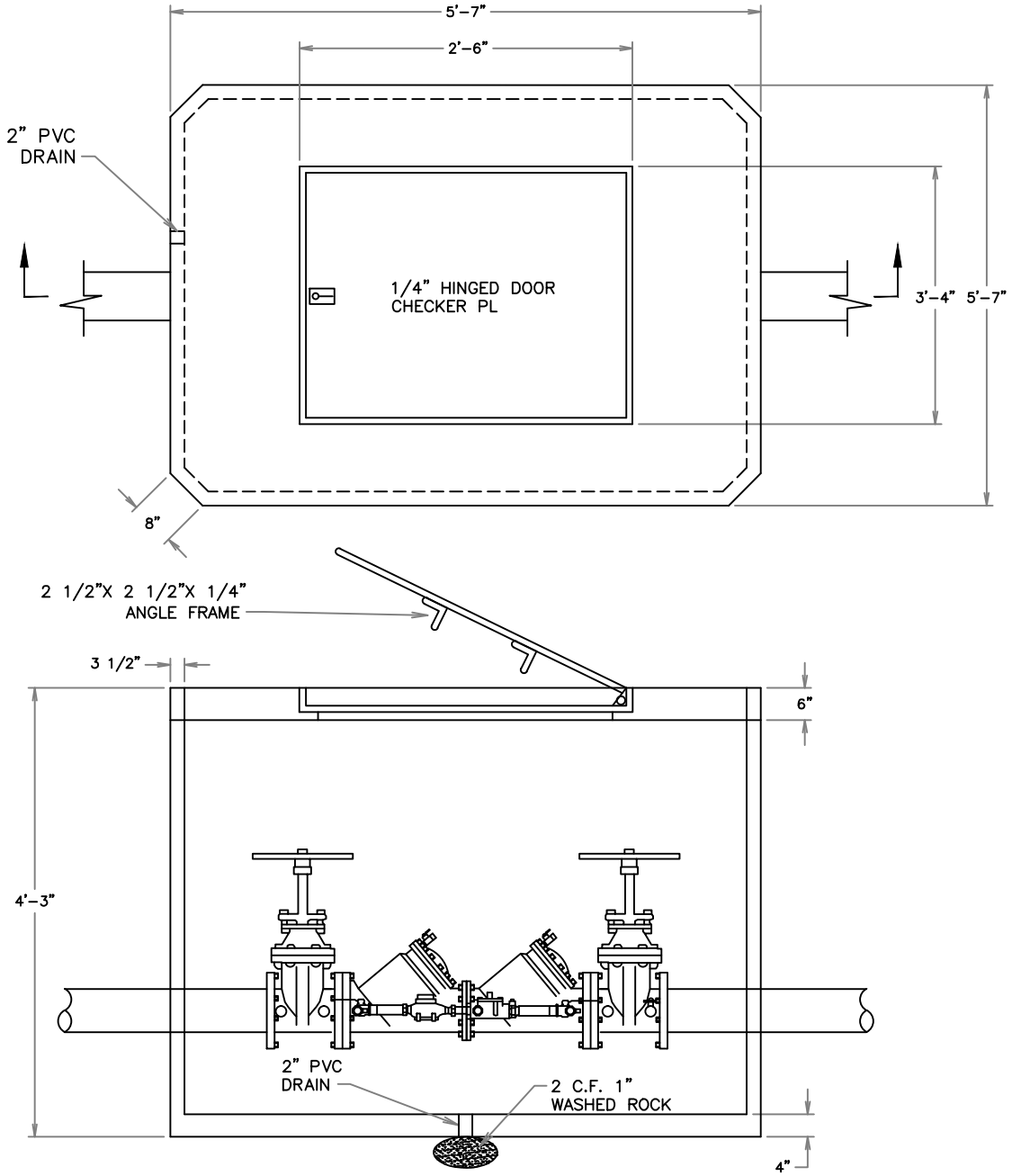

1. DOUBLE DETECTOR CHECK ASSEMBLY TO BE HOUSED IN A PRECAST METER VAULT AS MANUFACTURED BY CONCRETE PRODUCTS INC. OR APPROVED EQUAL. REINFORCEMENT: NO. 4 GRADE 60 8" O.C.E.W.
   NO. 5 GRADE 60 CONTINUOUS AROUND OPENING IN TOP

2. ASSEMBLIES 2" AND SMALLER SHALL HAVE AT LEAST A 6" CLEARANCE BELOW AND ON BOTH SIDES OF THE ASSEMBLY. ALL ASSEMBLIES LARGER THAN 2" SHALL HAVE A MINIMUM CLEARANCE OF 12" ON THE BACK SIDE, 24" ON THE TEST PORT SIDE, & 12" BELOW THE ASSEMBLY.

3. ALL TEST PORTS SHALL FACE UPWARD AND SHALL HAVE PROTECTIVE CAPS.

4. UPON INSTALLATION, ASSEMBLY MUST BE TESTED BY CERTIFIED TESTER AND RESULTS FURNISHED TO THE CITY OF WACO, UTILITY DEPARTMENT. TEST RESULTS SHALL BE FURNISHED BY OWNER ON ANNUAL BASIS.

5. ALL NEW FIRE LINE SERVICES, AND THOSE ENCOUNTERED IN A CONSTRUCTION PROJECT SHALL HAVE INSTALLED A BACKFLOW DEVICE BASED ON THE DEGREE OF HAZARD. THE AUXILIARY LINE SHALL CONSIST OF AN APPROVED BACKFLOW PREVENTER AND WATER METER.

DOUBLE CHECK VALVE VAULT

(NO SCALE)

WACO

ENGINEERING SERVICES

REVISIONS

NO.	REMARKS	BY	DATE
04	REMOVE SEAL	DG	09/03/2014
03	REINSTATED DETAIL	DG	07/12/2010

BOOK PAGE NUMBER 0000

DATE 09/03/2014

NOTE:

1. STANDARD METER BOX FOR 3/4" AND 1" METERS IS A CARSON 1017 12" INVERTED BOX WITH PLASTIC LID AND A CAST IRON READER LID, OR APPROVED EQUAL.

   WITH PRIOR APPROVAL FROM THE CITY, A METER MAY BE LOCATED IN AN AREA EXPOSED TO TRAFFIC. IN THIS CASE OUR STANDARD BOX FOR METERS OF THESE SIZES IS AN OLDCASTLE SERIES 38 METER BOX WITH CAST IRON HINGED LID, OR APPROVED EQUAL.

2. THE STANDARD METER BOX FOR 1 1/2" METERS IS AN OLDCASTLE SERIES 65 METER BOX WITH CAST IRON HINGED LID, OR APPROVED EQUAL.

3. METERS 2" AND LARGER WILL BE INSTALLED IN A CONCRETE VAULT.

4. WHERE METER BOX IS EXPOSED TO TRAFFIC, OR IN SIDEWALK USE CONCRETE BOX WITH CONCRETE TRAFFIC COVER AND CAST IRON READER LID.

5. NO SWEATED JOINTS, GALVANIZED OR P.V.C., WILL BE ACCEPTED. BRASS AND COPPER ONLY, THREADED OR COMPRESSION COUPLINGS.

6. THE METER IS TO BE LOCATED AS CLOSE TO THE MAIN AS POSSIBLE. (MIN. 2'-0" CLEARANCE). LOCATIONS SHOULD BE REVIEWED BY THE INSPECTOR ASSIGNED TO THE PROJECT FROM THE CITY OF WACO. VARIATIONS MAY BE APPROVED ON A CASE BY CASE BASIS ONLY.

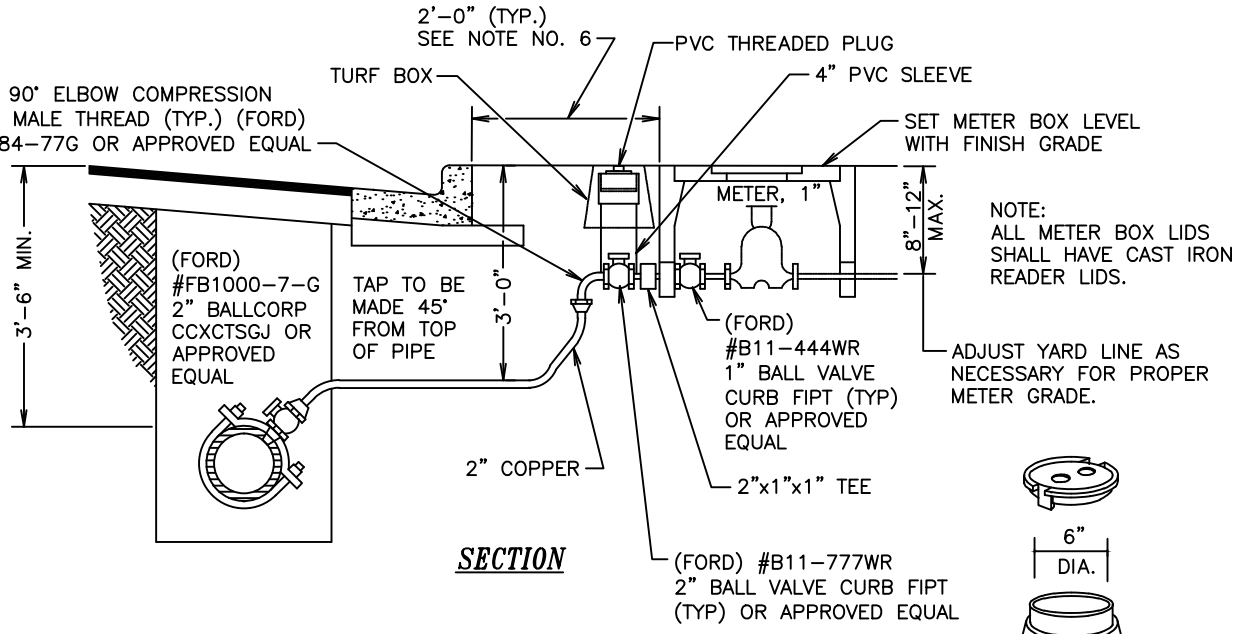

SECTION

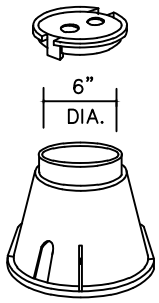

6"ø TURF BOX

PLEASE REFER TO W-13A & W-13B WHEN 4" PVC SLEEVE IS EXPOSED TO TRAFFIC OR IS IN THE SIDEWALK.

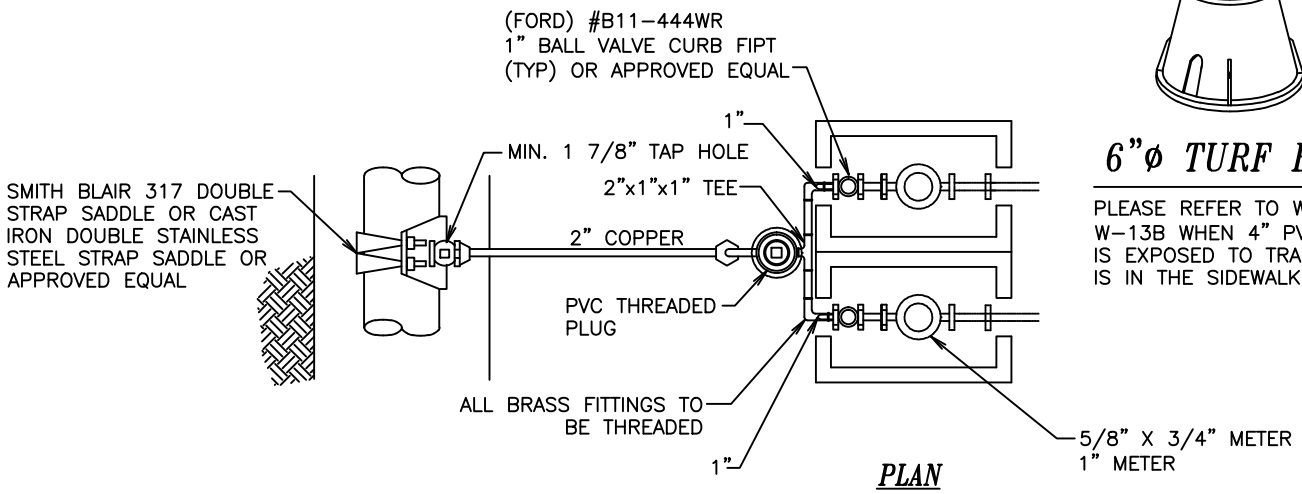

PLAN

BULLHEAD METER CONNECTION

(NO SCALE)

WACO

ENGINEERING SERVICES

REVISIONS

NO.	COMMENTS	BY	DATE
04	REMOVE SEAL	DG	09/03/2014
03	UPDATED	DG	06/28/2010
02	UPDATED	JS	03/19/2010

BOOK PAGE NUMBER 0000

DATE 09/03/2014

W-13A

EAST JORDAN IRON WORKS, INC.
PRODUCT #33470000 OR APPROVED EQUAL

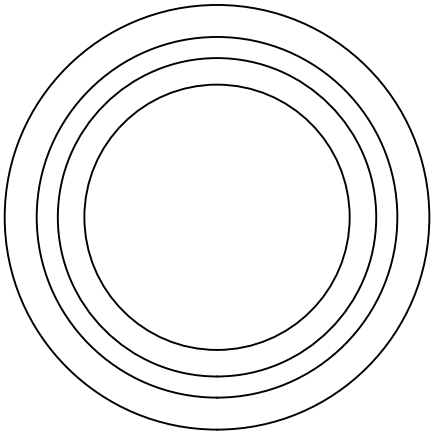

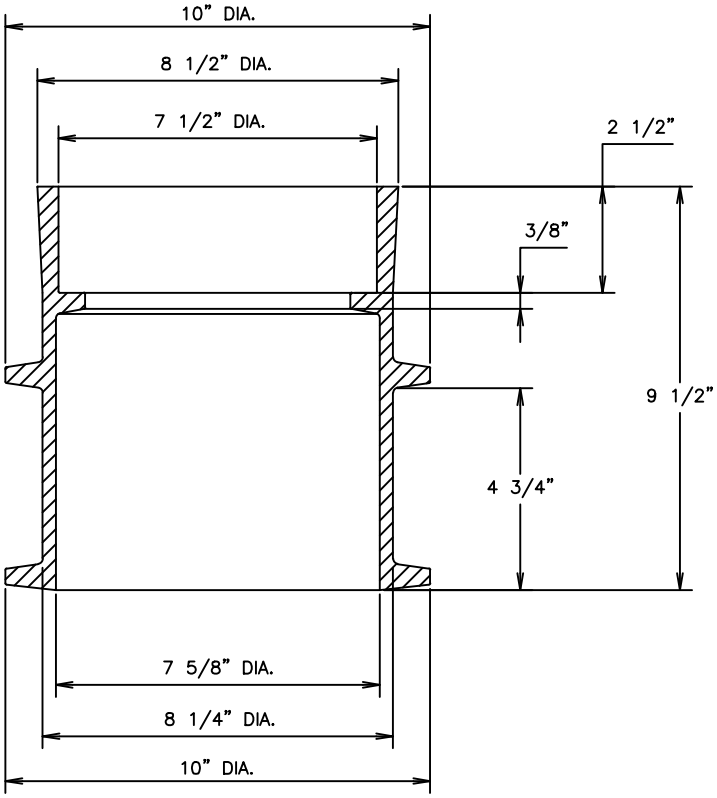

VALVE BOX

(NOT TO SCALE)

WACO

ENGINEERING SERVICES

REVISIONS			
NO.	COMMENTS	BY	DATE
1	REMOVE SEAL	DG	09/03/2014

BOOK PAGE NUMBER 0000

DATE 09/03/2014

EAST JORDAN IRON WORKS, INC.
PRODUCT #33170002 OR APPROVED EQUAL

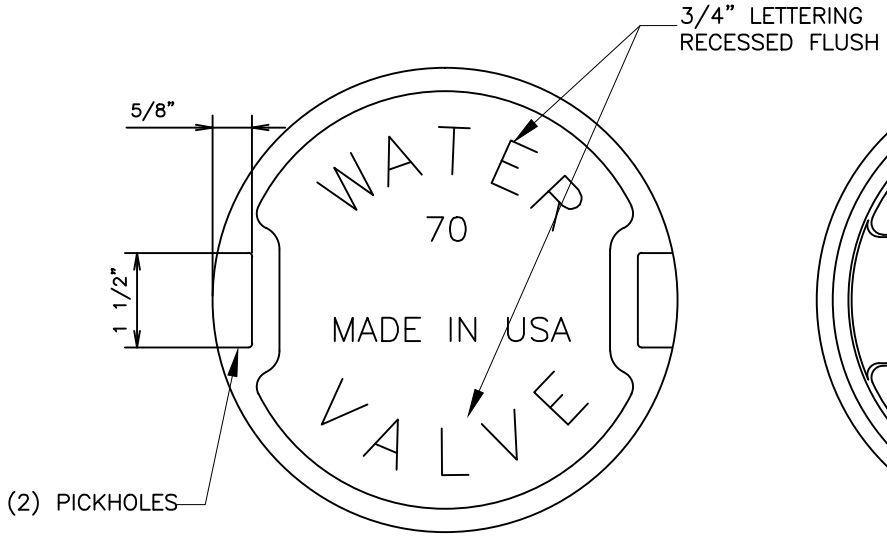

COVER TOP VIEW
(NOT TO SCALE)

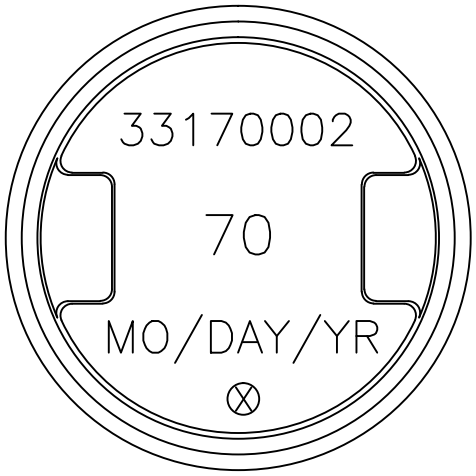

COVER BACK VIEW
(NOT TO SCALE)

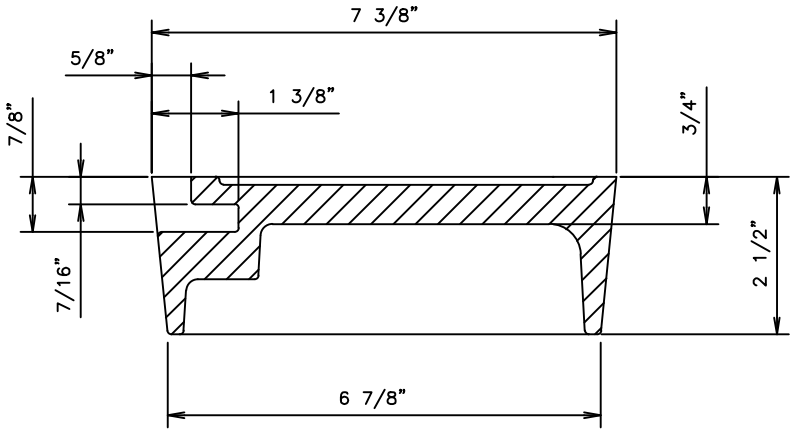

COVER SECTION
(NOT TO SCALE)

VALVE BOX COVER

WACO

ENGINEERING SERVICES

REVISIONS

NO.	COMMENTS	BY	DATE
1	REMOVE SEAL	DG	09/03/2014

BOOK PAGE NUMBER
0000

DATE
09/03/2014

NOTE:

1. STANDARD METER BOX FOR 3/4" AND 1" METERS IS A CARSON 1017 12" INVERTED BOX WITH PLASTIC LID AND A CAST IRON READER LID, OR APPROVED EQUAL.

   WITH PRIOR APPROVAL FROM THE CITY, A METER MAY BE LOCATED IN AN AREA EXPOSED TO TRAFFIC. IN THIS CASE OUR STANDARD BOX FOR METERS OF THESE SIZES IS AN OLDCASTLE SERIES 38 METER BOX WITH CAST IRON HINGED LID, OR APPROVED EQUAL.

2. THE STANDARD METER BOX FOR 1 1/2" METERS IS AN OLDCASTLE SERIES 65 METER BOX WITH CAST IRON HINGED LID, OR APPROVED EQUAL.

3. METERS 2" AND LARGER WILL BE INSTALLED IN A CONCRETE VAULT.

4. WHERE METER BOX IS EXPOSED TO TRAFFIC, OR IN SIDEWALK USE CONCRETE BOX WITH CONCRETE TRAFFIC COVER AND CAST IRON READER LID.

5. NO SWEATED JOINTS, GALVANIZED OR P.V.C., WILL BE ACCEPTED. BRASS AND COPPER ONLY, THREADED OR COMPRESSION COUPLINGS.

6. THE METER IS TO BE LOCATED AS CLOSE TO THE MAIN AS POSSIBLE. (MIN. 2'-0" CLEARANCE). LOCATIONS SHOULD BE REVIEWED BY THE INSPECTOR ASSIGNED TO THE PROJECT FROM THE CITY OF WACO. VARIATIONS MAY BE APPROVED ON A CASE BY CASE BASIS ONLY.

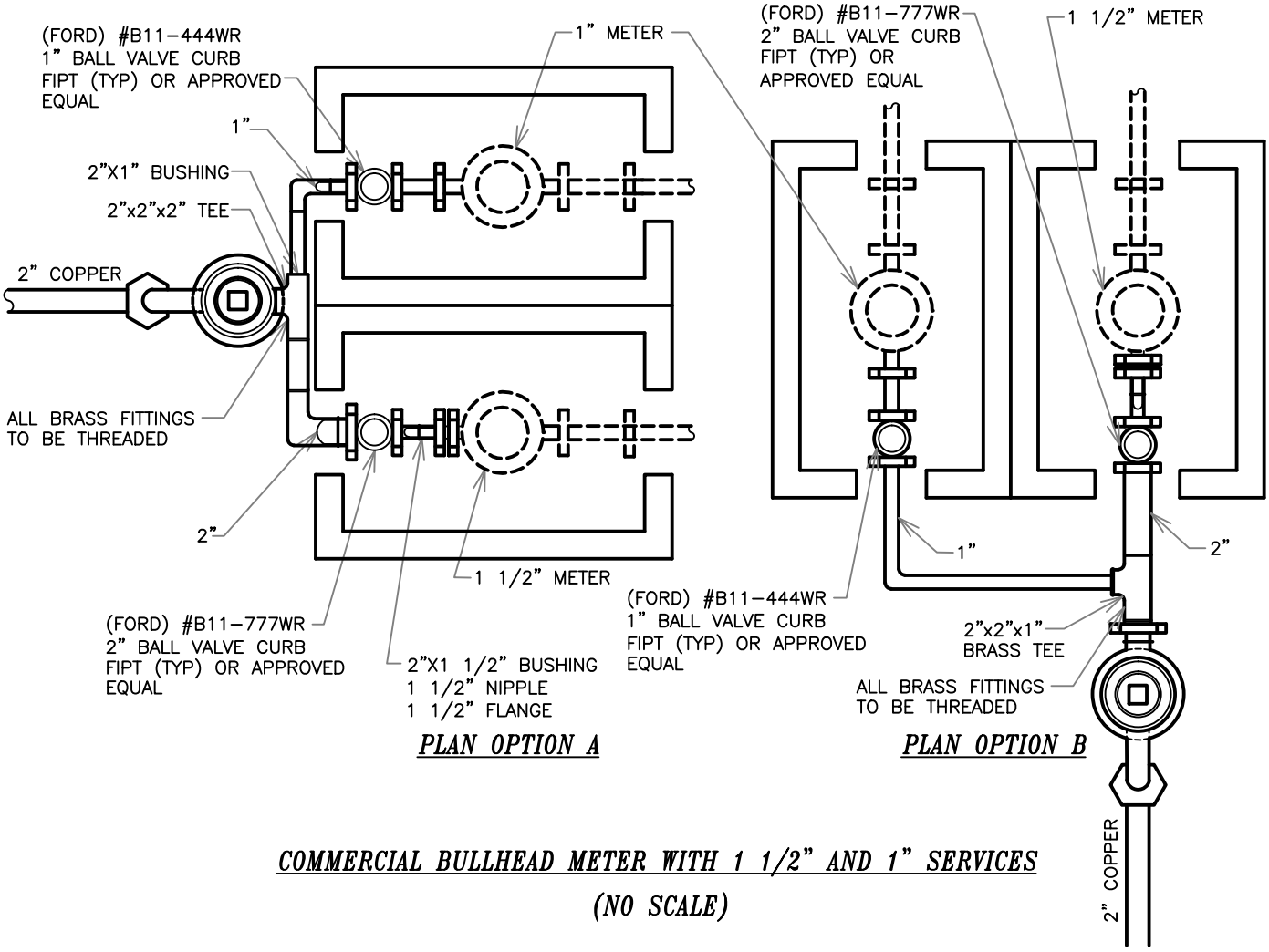

COMMERCIAL BULLHEAD METER WITH 1 1/2" AND 1" SERVICES

(NO SCALE)

WACO

ENGINEERING SERVICES

REVISIONS

NO.	COMMENTS	BY	DATE
02	REMOVE SEAL	DG	09/03/2014
01	ADDED	JS	03/19/2010

BOOK PAGE NUMBER 0000

DATE 09/03/2014

NOTES:

1. STANDARD METER BOX FOR 3/4" AND 1" METERS IS A CARSON 1017 12" INVERTED BOX WITH PLASTIC LID AND A CAST IRON READER LID, OR APPROVED EQUAL.

   WITH PRIOR APPROVAL FROM THE CITY, A METER MAY BE LOCATED IN AN AREA EXPOSED TO TRAFFIC. IN THIS CASE OUR STANDARD BOX FOR METERS OF THESE SIZES IS AN OLDCASTLE SERIES 38 METER BOX WITH CAST IRON HINGED LID, OR APPROVED EQUAL.

2. THE STANDARD METER BOX FOR 1 1/2" METERS IS AN OLDCASTLE SERIES 65 METER BOX WITH CAST IRON HINGED LID, OR APPROVED EQUAL.

3. METERS 2" AND LARGER WILL BE INSTALLED IN A CONCRETE VAULT.

4. WHERE METER BOX IS EXPOSED TO TRAFFIC, OR IN SIDEWALK USE CONCRETE BOX WITH CONCRETE TRAFFIC COVER AND CAST IRON READER LID.

5. NO SWEATED JOINTS, GALVANIZED OR P.V.C., WILL BE ACCEPTED. BRASS AND COPPER ONLY, THREADED OR COMPRESSION COUPLINGS.

6. THE METER IS TO BE LOCATED AS CLOSE TO THE MAIN AS POSSIBLE. (MIN. 2'-0" CLEARANCE). LOCATIONS SHOULD BE REVIEWED BY THE INSPECTOR ASSIGNED TO THE PROJECT FROM THE CITY OF WACO. VARIATIONS MAY BE APPROVED ON A CASE BY CASE BASIS ONLY.

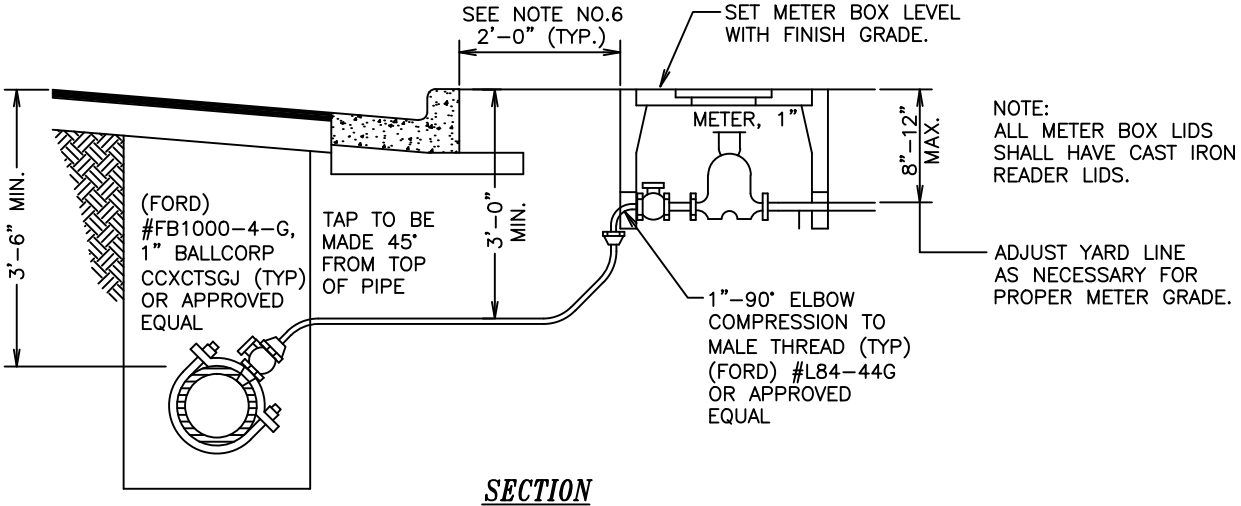

SECTION

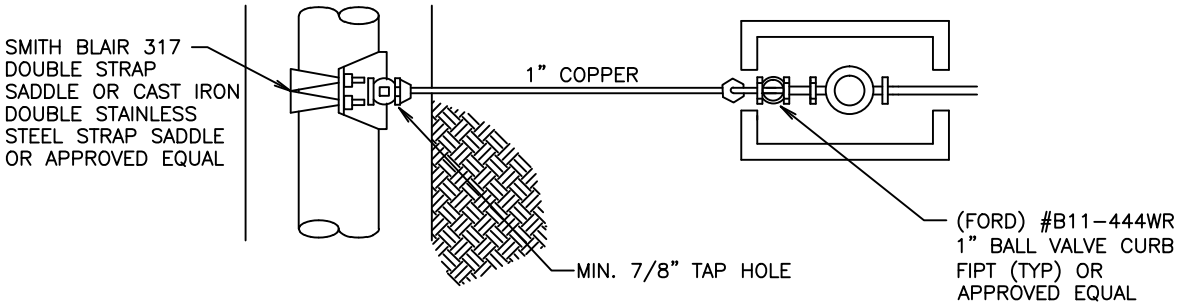

PLAN

TYPICAL RESIDENTIAL - METER SERVICE CONNECTION

(NO SCALE)

WACO

ENGINEERING SERVICES

REVISIONS

NO.	COMMENTS	BY	DATE
05	REMOVE SEAL	DG	09/03/2014
04	ADD "MIN" TO 3'-0" DIMENSION DEPTH-FINISH GRADE TO SERVICE.	DG	04/30/2014
03	UPDATED	DG	06/28/2010
02	UPDATED	JS	03/19/2010

BOOK PAGE NUMBER 0000

DATE 09/03/2014

NOTES:

1. STANDARD METER BOX FOR 3/4" AND 1" METERS IS A CARSON 1017 12" INVERTED BOX WITH PLASTIC LID AND A CAST IRON READER LID, OR APPROVED EQUAL.

   WITH PRIOR APPROVAL FROM THE CITY, A METER MAY BE LOCATED IN AN AREA EXPOSED TO TRAFFIC. IN THIS CASE OUR STANDARD BOX FOR METERS OF THESE SIZES IS AN OLDCASTLE SERIES 38 METER BOX WITH CAST IRON HINGED LID, OR APPROVED EQUAL.

2. THE STANDARD METER BOX FOR 1 1/2" METERS IS AN OLDCASTLE SERIES 65 METER BOX WITH CAST IRON HINGED LID, OR APPROVED EQUAL.

3. METERS 2" AND LARGER WILL BE INSTALLED IN A CONCRETE VAULT.

4. WHERE METER BOX IS EXPOSED TO TRAFFIC, OR IN SIDEWALK USE CONCRETE BOX WITH CONCRETE TRAFFIC COVER AND CAST IRON READER LID.

5. NO SWEATED JOINTS, GALVANIZED OR P.V.C., WILL BE ACCEPTED. BRASS AND COPPER ONLY, THREADED OR COMPRESSION COUPLINGS.

6. THE METER IS TO BE LOCATED AS CLOSE TO THE MAIN AS POSSIBLE. (MIN. 2'-0" CLEARANCE). LOCATIONS SHOULD BE REVIEWED BY THE INSPECTOR ASSIGNED TO THE PROJECT FROM THE CITY OF WACO. VARIATIONS MAY BE APPROVED ON A CASE BY CASE BASIS ONLY.

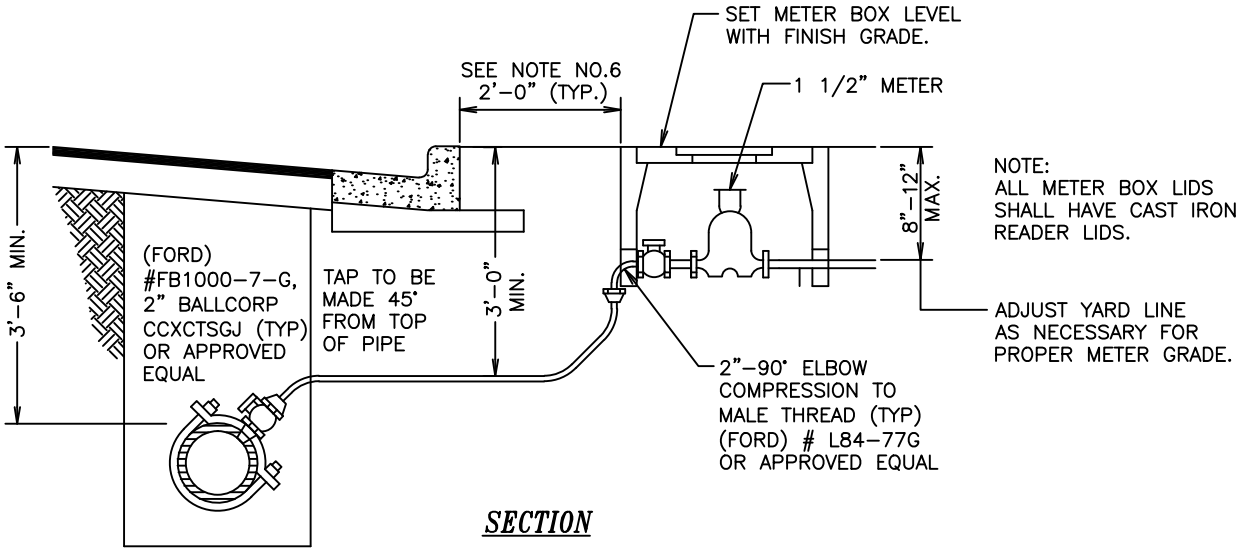

SECTION

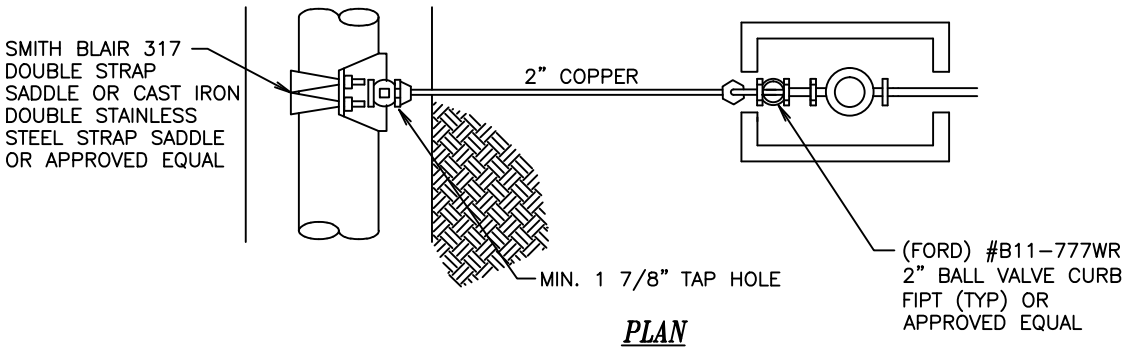

PLAN

TYPICAL COMMERCIAL OR LARGE RESIDENTIAL - METER SERVICE CONNECTION
(NO SCALE)

WACO

ENGINEERING SERVICES

REVISIONS

NO.	COMMENTS	BY	DATE
05	REMOVE SEAL	DG	09/03/2014
04	ADD "MIN" TO 3'-0" DIMENSION DEPTH-FINISH GRADE TO SERVICE	DG	04/30/2014
03	UPDATED	DG	06/28/2010
02	UPDATED	JS	03/19/2010

BOOK PAGE NUMBER 0000

DATE 09/03/2014

W-14B

NOTES:

1. STANDARD METER BOX 3/4" AND 1" METERS IS A CARSON 1017 12" INVERTED BOX WITH PLASTIC LID AND CAST IRON READER LID, OR APPROVED EQUAL.

   WITH PRIOR APPROVAL FROM THE CITY, A METER MAY BE LOCATED IN AN AREA EXPOSED TO TRAFFIC. IN THIS CASE OUR STANDARD BOX FOR METERS OF THESE SIZES IS AND OLDCASTLE SERIES 38 METER BOX WITH CAST IRON HINGED LID, OR APPROVED EQUAL.

2. THE STANDARD METER BOX 1 1/2" METERS IS AN OLDCASTLE SERIES 65 METER BOX WITH CAST IRON HINGED LID OR APPROVED EQUAL.
3. METERS 2" AND LARGER WILL BE INSTALLED IN A CONCRETE VAULT.
4. CONFIGURATION BASED UPON LOCATION OF YARD LINES.
5. NO SWEATED JOINTS, GALVANIZED OR P.V.C., WILL BE ACCEPTED. BRASS AND COPPER ONLY, THREADED OR COMPRESSION COUPLINGS.
6. INSTALLATIONS EXCEEDING 6 OUTLETS WILL BE DESIGNED AND APPROVED BY THE ENGINEER OF RECORD.

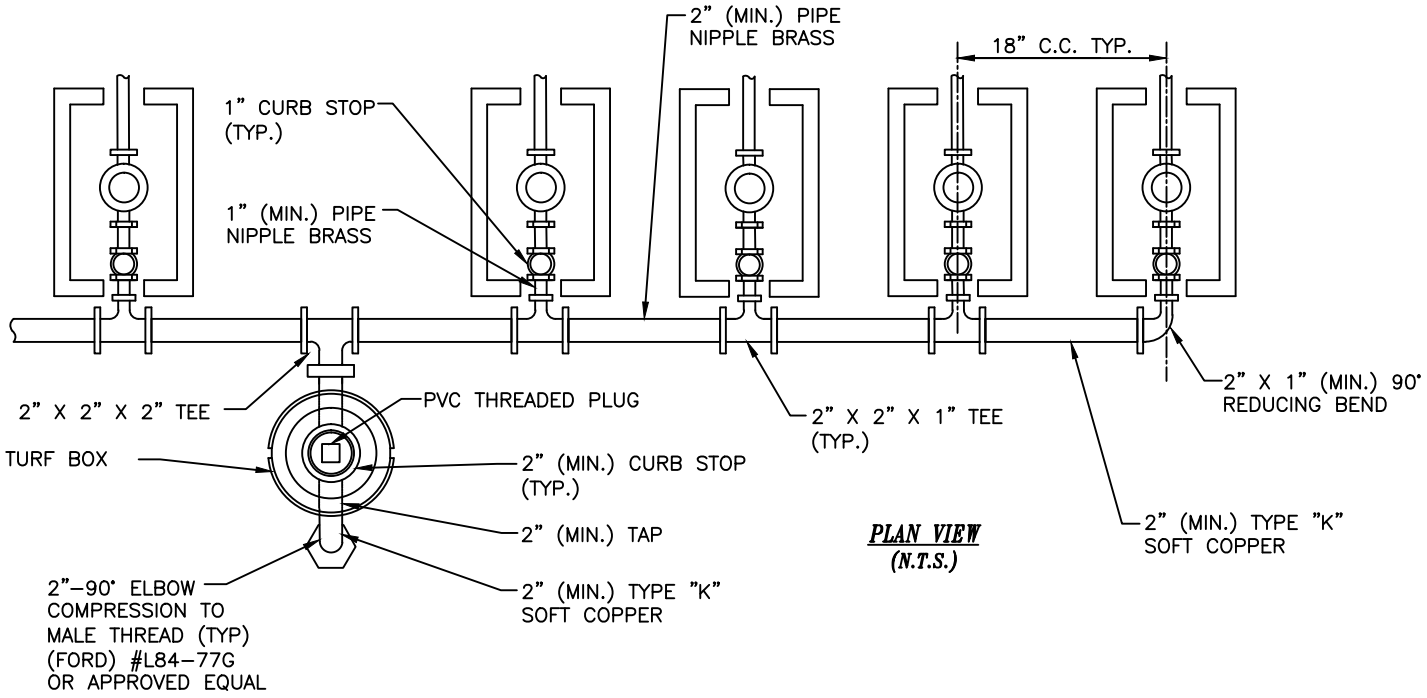

PLAN VIEW
(N.T.S.)

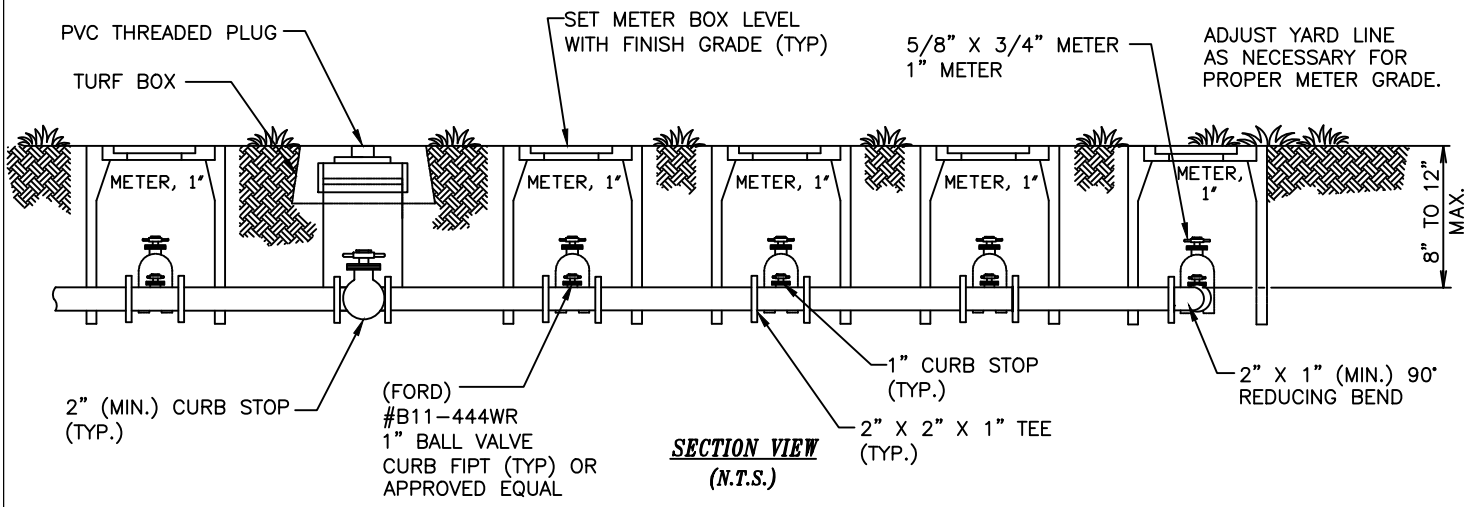

SECTION VIEW
(N.T.S.)

TYPICAL MANIFOLD - METER SERVICE CONNECTION
(N.T.S.)

WACO

ENGINEERING SERVICES

REVISIONS

NO.	COMMENTS	BY	DATE
04	REMOVE SEAL	DG	09/03/2014
03	UPDATED	DG	06/28/2010
02	UPDATED	JS	03/19/2010

BOOK PAGE NUMBER 0000

DATE 09/03/2014

METER VAULT AND LID - NOTES

1. LARGER METERS REQUIRE PROJECT SPECIFIC, SEALED DESIGN.
2. MINIMUM 12" CLEARANCE EXCEPT ENDS.
3. CONCRETE SLAB – SOLID 6" THICKNESS.
4. METER VAULT SHALL NOT BE INSTALLED IN EXISTING OR PROPOSED SIDEWALKS, DRIVEWAYS, PAVEMENTS OR ANY TRAFFIC AREAS.
5. STANDARD METER BOX FOR 3/4" AND 1" METERS IS A CARSON 1017 12" INVERTED BOX WITH A PLASTIC LID AND A CAST IRON READER LID, OR APPROVED EQUAL.

   WITH PRIOR APPROVAL FROM THE CITY, A METER MAY BE LOCATED IN AN AREA EXPOSED TO TRAFFIC. IN THIS CASE OUR STANDARD BOX FOR METERS OF THESE SIZES IS AN OLDCASTLE SERIES 38 METER BOX WITH CAST IRON HINGED LID, OR APPROVED EQUAL.
6. THE STANDARD METER BOX FOR 1 1/2" METERS IS AN OLDCASTLE SERIES 65 METER BOX WITH CAST IRON HINGED LID, OR APPROVED EQUAL.
7. METERS 2" AND LARGER WILL BE INSTALLED IN A CONCRETE VAULT.

NO TRAFFIC LOCATION

1. STANDARD ACCESS DOOR IS 3' X 6' CLEAR, ALUMINUM HATCHWAY AND SPRING ASSISTED. DOOR SHALL BE CAST IN AND MOUNTED FLUSH. HINGED 1/4" ALUMINUM DIAMOND PLATE COVER, WITH 1/4" EXTRUDED ALUMINUM FRAME. HATCH TO BE FURNISHED WITH STAINLESS STEEL HARDWARE.
2. STEEL LID SINGLE OR DOUBLE LEAF; DESIGNED TO WITHSTAND AASHTO H–20 WHEEL LOADINGS SUITABLE FOR USE IN OFF–STREET LOCATIONS WHERE NOT SUBJECT TO HIGH DENSITY TRAFFIC.
3. CONCRETE: CLASS A CONCRETE WITH DESIGN STRENGTH OF 3000 PSI AT 28 DAYS. UNIT IS OF MONOLITHIC CONSTRUCTION AT FLOOR AND FIRST STAGE OF WALL WITH SECTIONAL RISER TO REQUIRED DEPTH. ALL CONCRETE JOINTS SEALED WATERTIGHT w/ RAMNEK GASKET OR APPROVED EQUAL.
4. REINFORCEMENT: ALL BARS GRADE 60. SLAB TYPE: #4 BAR 8" OC–EW. TYPE: 3 EACH #5 BAR CONTINUOUS AND DOUBLED ON CORNERS.

MAIN SIZE	BY PASS	L	W	H	INSIDE DIMENSIONS
2"	1"	5'–7"	5'–7"	4'–3"	5'–0"X 5'–0"X 3'–5"
3"	2"	8'–2"	5'–2"	5'–6"	7'–6"X 4'–6"X 4'–6"
4"	2"	8'–2"	5'–2"	5'–6"	7'–6"X 4'–6"X 4'–6"
6"	4"	13'–0"	7'–0"	6'–0"	12'–0"X 6'–0"X 5'–0"

TRAFFIC LOCATION - REQUIRES PRIOR CITY OF WACO APPROVAL

1. STANDARD ACCESS DOOR IS 3' X 5' CLEAR, AND SPRING ASSISTED. DOOR SHALL BE CAST IN FLUSH.
2. STEEL LID SINGLE OR DOUBLE LEAF; DESIGNED TO WITHSTAND AASHTO H–20–44 WHEEL LOADINGS SUITABLE FOR USE IN OFF–STREET LOCATIONS PER CALCULATION NUMBER.
3. HANDHOLE TO BE PLACED ON A 6" BASE OF CRUSHER RUN FOR EVEN LOAD DISTRIBUTION AND EASE OF INSTALLATION.
4. CONCRETE DESIGN IN ACCORDANCE WITH AASHTO H–20–44 TRAFFIC BRIDGE LOADING USING 5,500 PSI COMPRESSIVE STRENGTH ASTM A–706 STEEL REINFORCEMENT PER CALCULATION NUMBER. UNIT IS OF MONOLITHIC CONSTRUCTION AT FLOOR AND FIRST STAGE OF WALL WITH SECTIONAL RISER TO REQUIRED DEPTH. ALL CONCRETE JOINTS SEALED WATERTIGHT w/ RAMNEK GASKET OR APPROVED EQUAL.

W-16

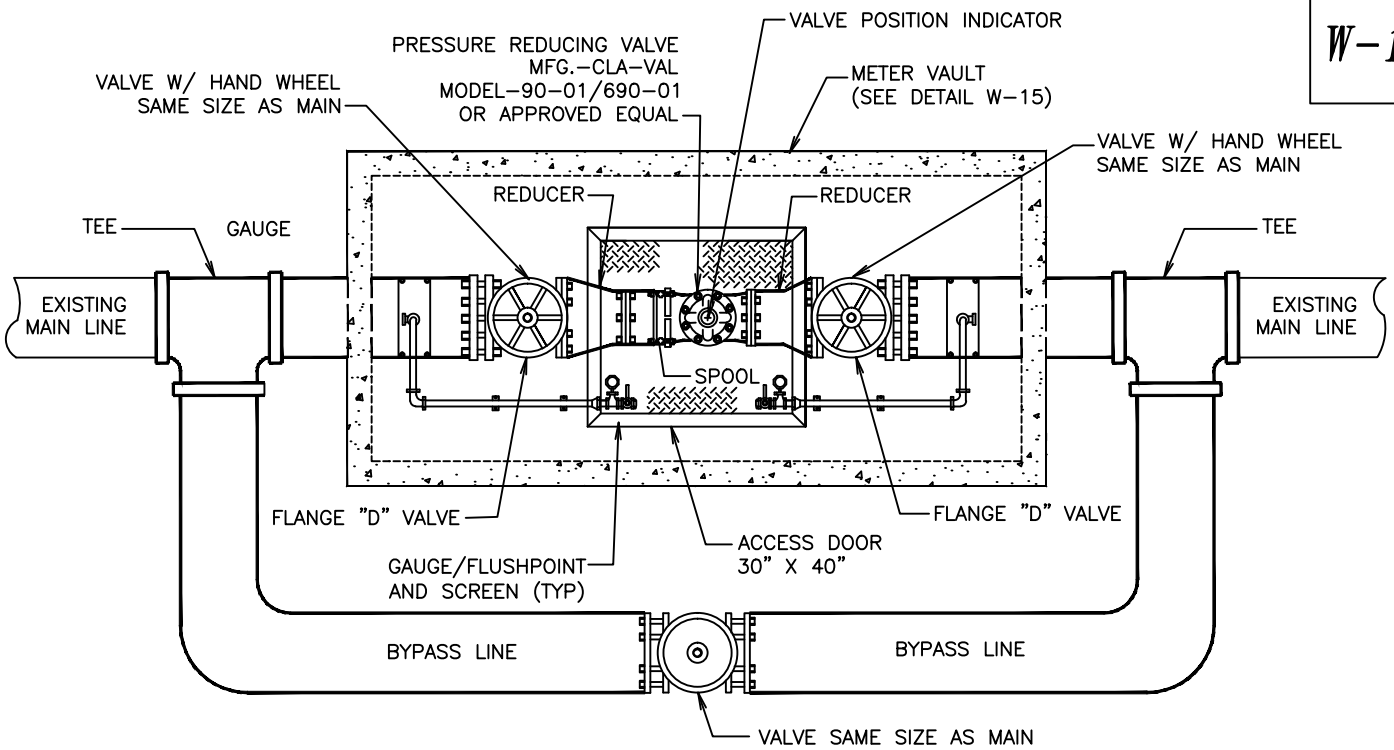

NOTE:
ASSEMBLIES 2" AND SMALLER SHALL HAVE AT LEAST A 6" CLEARANCE ON BOTH DRAIN SIDES AND ON TOP OF THE ASSEMBLY, AND 12" BELOW AND BEHIND THE ASSEMBLY. ALL ASSEMBLIES LARGER THAN 2" SHALL HAVE A MINIMUM OF 12" ON THE BACK SIDE, 24" ON THE TEST COCK SIDE, AND THE RELIEF VALVE OPENING SHALL BE AT LEAST 12" PLUS NOMIINAL SIZE OF ASSEMBLY ABOVE THE FLOOR OR HIGHEST POSSIBLE WATER LEVEL REMOVABLE TOP.
THE ASSEMBLY SHALL BE READILY ACCESSIBLE FOR TESTING AND MAINTENANCE, WITH A MINIMUM CLEARANCE OF 12" ALL AROUND THE ASSEMBLY.

PLAN VIEW
(N.T.S.)

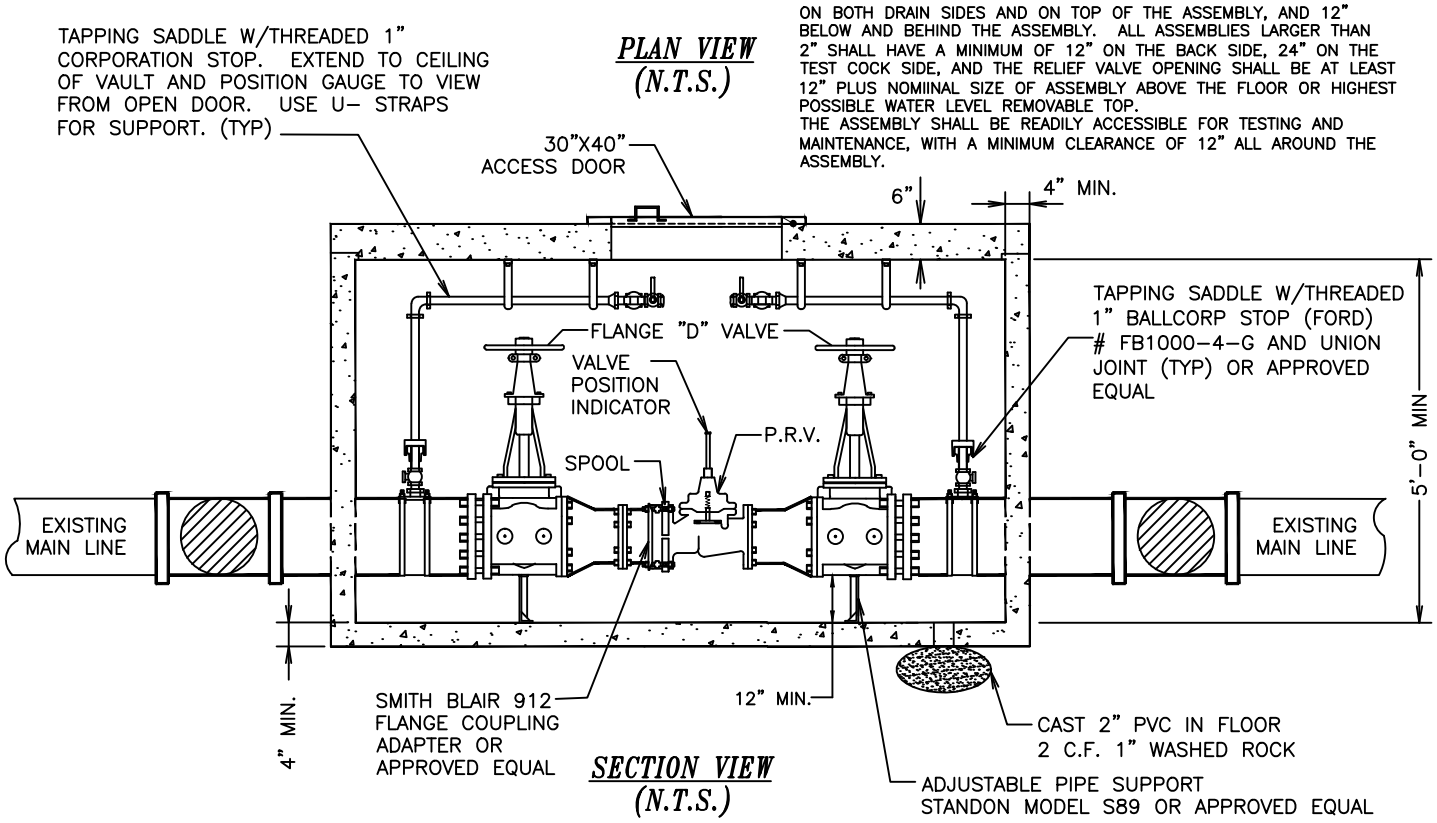

SECTION VIEW
(N.T.S.)

PRESSURE REDUCING VALVE ASSEMBLY ON NEW OR EXISTING MAIN
(N.T.S.)

WACO

ENGINEERING
SERVICES

REVISIONS

NO.	COMMENTS	BY	DATE
04	REMOVE SEAL	DG	09/03/2014
03	ADDED NOTE ON ASSEMBLY CLEARANCES	DG	07/12/2010
02	ADDED PIPE SUPPORT NOTE	JS	03/19/2010

BOOK PAGE NUMBER
0000

DATE
09/03/2014

PRESSURE REDUCING VALVE (PRV) - NOTES

1. PRV SHALL BE CLA VAL 90-01 A, B, KC, OR APPROVED EQUAL WITH VALVE POSITION INDICATOR AND SHALL BE CAPABLE OF RETURN FLOW.
2. PRV WILL BE SIZED FOR SITE SPECIFIC CONDITIONS.
3. ALL BYPASS PIPING TO BE SAME SIZE AS MAIN.
4. ALL PIPING WITHIN VAULT AND THROUGH WALLS, SHALL BE D.I.P. ALL FITTINGS WITHIN VAULT SHALL BE FLANGED.
5. VAULT TO BE SIZED SUCH THAT THERE IS A MINIMUM OF 30" WORKING AREA BETWEEN WALLS AND ANY PIPE APPURTENANCES. VAULT SIZES ARE MINIMUM, AND WILL BE DETERMINED BY GEOMETRICS OF ACTUAL PIPING ITEMS USED. CONTRACTOR SHALL SUBMIT VAULT SIZE PRIOR TO INSTALLATION.
6. BID ITEM FOR PRV INCLUDES VAULT, BYPASS, AND ALL ASSOCIATED APPURTENANCES.
7. BID ITEM WILL BE CALLED FOR BASED ON MAIN SIZE AND PRV SIZE ASSEMBLY. (IE. 12" X 8" PRV ASSEMBLY).
8. ACCESS DOOR-30" X 40" MIN. SIZE: PARKWAY INSTALLATIONS-FLUSH MOUNTED. TRAFFIC-INSTALLATIONS H-20 TOP MOUNTED. DOOR SHALL BE SPRING ASSISTED, SUBMIT MAKE AND MODEL FOR ENGINEERS WRITTEN APPROVAL.
9. PRV ASSEMBLY TO BE HOUSED IN A PRECAST METER VAULT, SUBMIT MAKE AND MODEL FOR ENGINEERS WRITTEN APPROVAL. WHERE LINE PROTRUDES THROUGH VAULT, WALLS MUST BE GROUTED TO MAINTAIN WATER TIGHT SEAL.

   MINIMUM REINFORCEMENT: #4 GRADE 60 8" C-C EW.
   #5 GRADE 60 CONTINUOUS. AROUND OPENING IN TOP.
10. SPOOL PIECE TO BE UNIFLANGE RESTRAINED/REMOVABLE FLANGE CONNECTIONS.
11. BOX SHOULD BE FLUSH WITH EXISTING GROUND.
12. ASSEMBLIES 2" AND SMALLER SHALL HAVE AT LEAST A 6" CLEARANCE ON BOTH DRAIN SIDES AND ON TOP OF THE ASSEMBLY, AND 12" BELOW AND BEHIND THE ASSEMBLY. ALL ASSEMBLIES LARGER THAN 2" SHALL HAVE A MINIMUM OF 12" ON THE BACK SIDE, 24" ON THE TEST COCK SIDE, AND THE RELIEF VALVE OPENING SHALL BE AT LEAST 12" PLUS NOMINAL SIZE OF ASSEMBLY ABOVE THE FLOOR OR HIGHEST POSSIBLE WATER LEVEL REMOVABLE TOP.
13. THE ASSEMBLY SHALL BE READILY ACCESSIBLE FOR TESTING AND MAINTENANCE, WITH A MINIMUM CLEARANCE OF 12" ALL AROUND THE ASSEMBLY.

MAIN SIZE	MIN. VAULT SIZE
6"	10' X 6'-6"
8"	11' X 7'
10"	12' X 7'
12"	12'-6" X 7'
16"	15'-6" X 7'

WACO

ENGINEERING SERVICES

REVISIONS

NO.	COMMENTS	BY	DATE
02	REMOVE SEAL	DG	09/03/2014
01	UPDATED	DG	07/12/2010

BOOK PAGE NUMBER 0000

DATE 09/03/2014

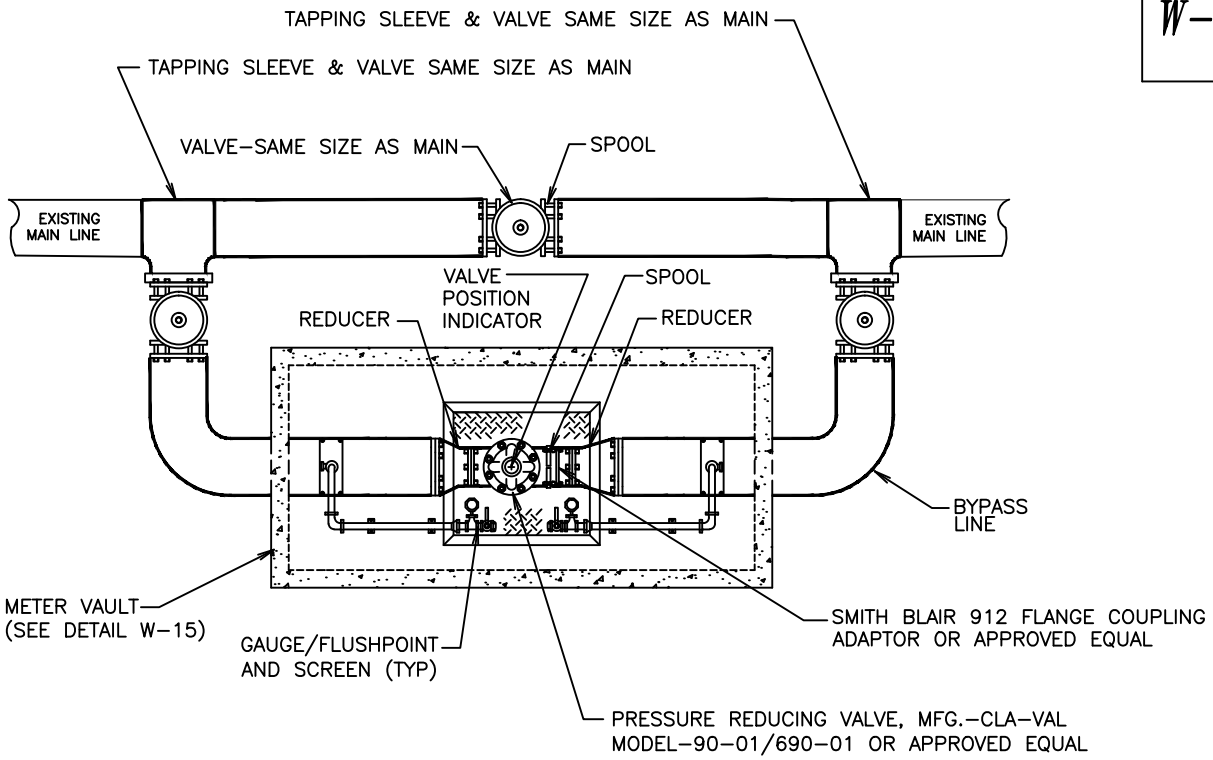

PLAN VIEW
(N.T.S.)

NOTE:
ASSEMBLIES 2" AND SMALLER SHALL HAVE AT LEAST A 6" CLEARANCE ON BOTH DRAIN SIDES AND ON TOP OF THE ASSEMBLY, AND 12" BELOW AND BEHIND THE ASSEMBLY. ALL ASSEMBLIES LARGER THAN 2" SHALL HAVE A MINIMUM OF 12" ON THE BACK SIDE, 24" ON THE TEST COCK SIDE, AND THE RELIEF VALVE OPENING SHALL BE AT LEAST 12" PLUS NOMIINAL SIZE OF ASSEMBLY ABOVE THE FLOOR OR HIGHEST POSSIBLE WATER LEVEL REMOVABLE TOP.
THE ASSEMBLY SHALL BE READILY ACCESSIBLE FOR TESTING AND MAINTENANCE, WITH A MINIMUM CLEARANCE OF 12" ALL AROUND THE ASSEMBLY.

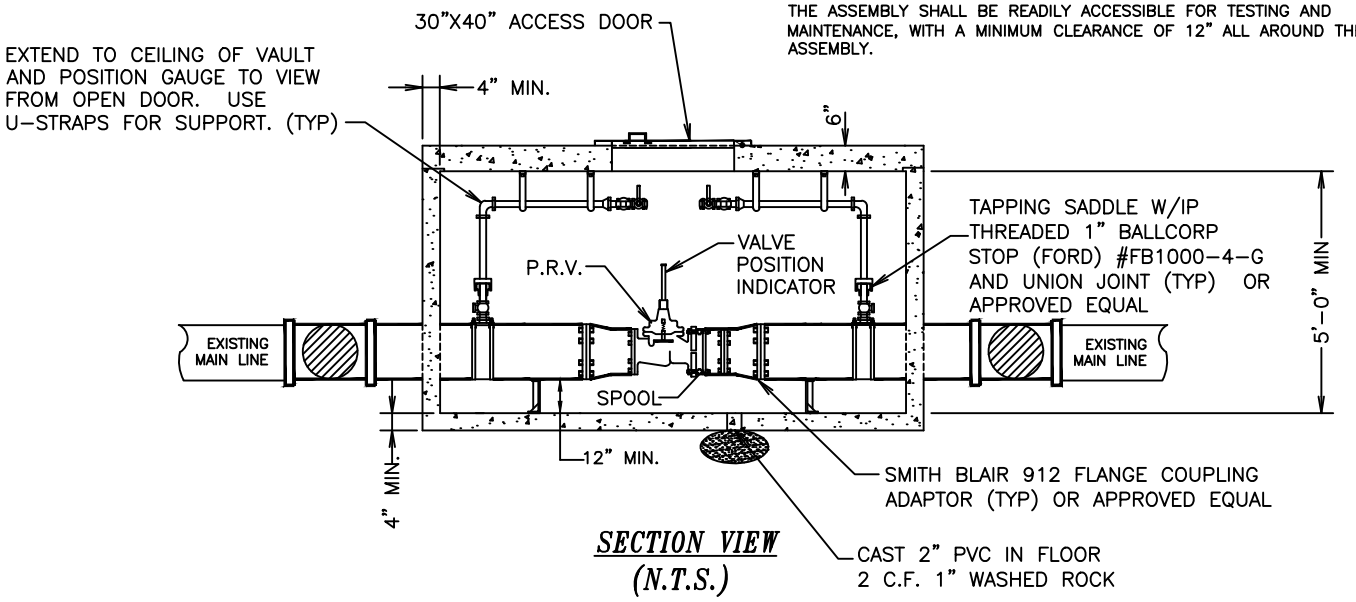

SECTION VIEW
(N.T.S.)

PRESSURE REDUCING VALVE ASSEMBLY ON EXISTING MAIN
(N.T.S.)

WACO

ENGINEERING SERVICES

REVISIONS

NO.	COMMENTS	BY	DATE
04	REMOVE SEAL	DG	09/03/2014
03	ADD NOTE ON ASSEMBLY CLEARANCES	DG	07/12/2010
02	UPDATED	JS	03/19/2010

BOOK PAGE NUMBER
0000

DATE
09/03/2014

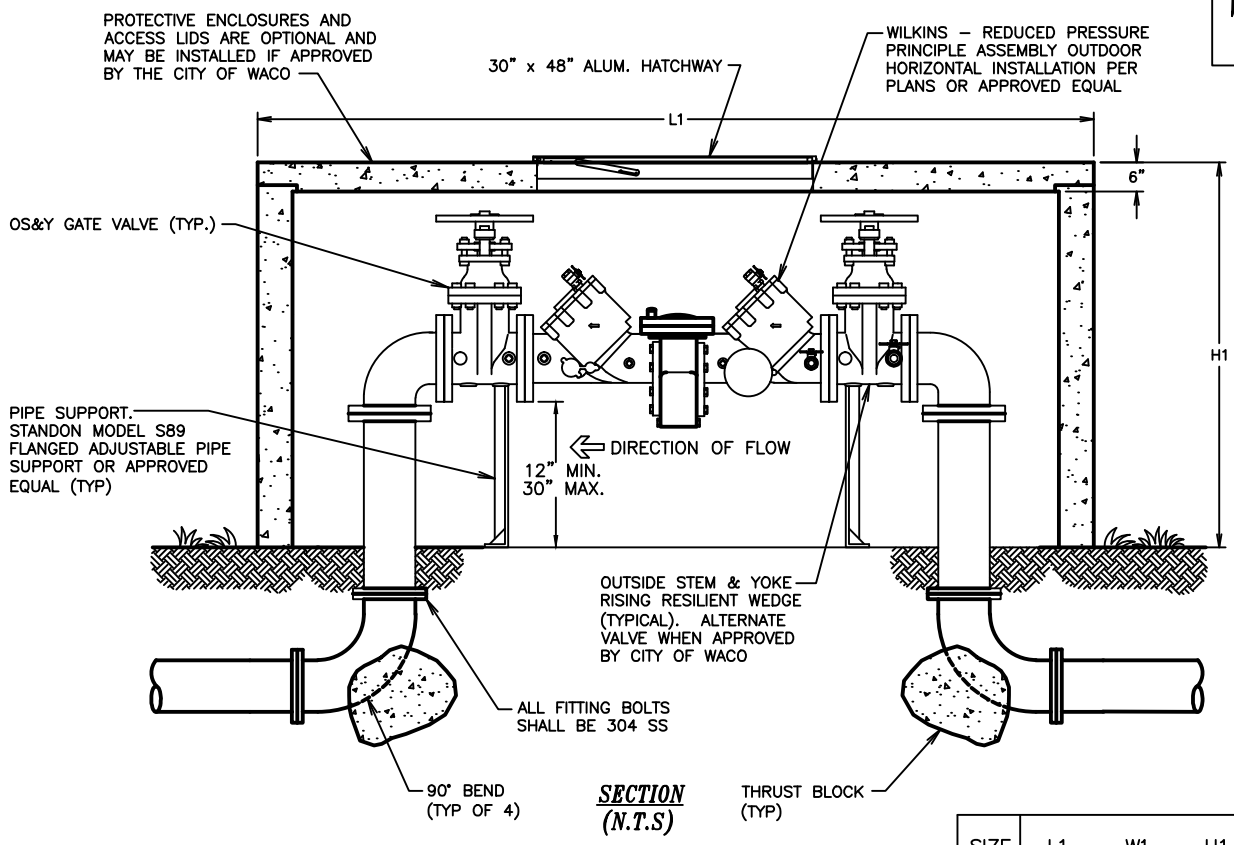

SECTION
(N.T.S)

SIZE	L1	W1	H1
6"	7'–10"	4'–4"	6'–0"
8"	8'–8"	5'–0"	6'–0"
10"	9'–0"	6'–0"	6'–6"

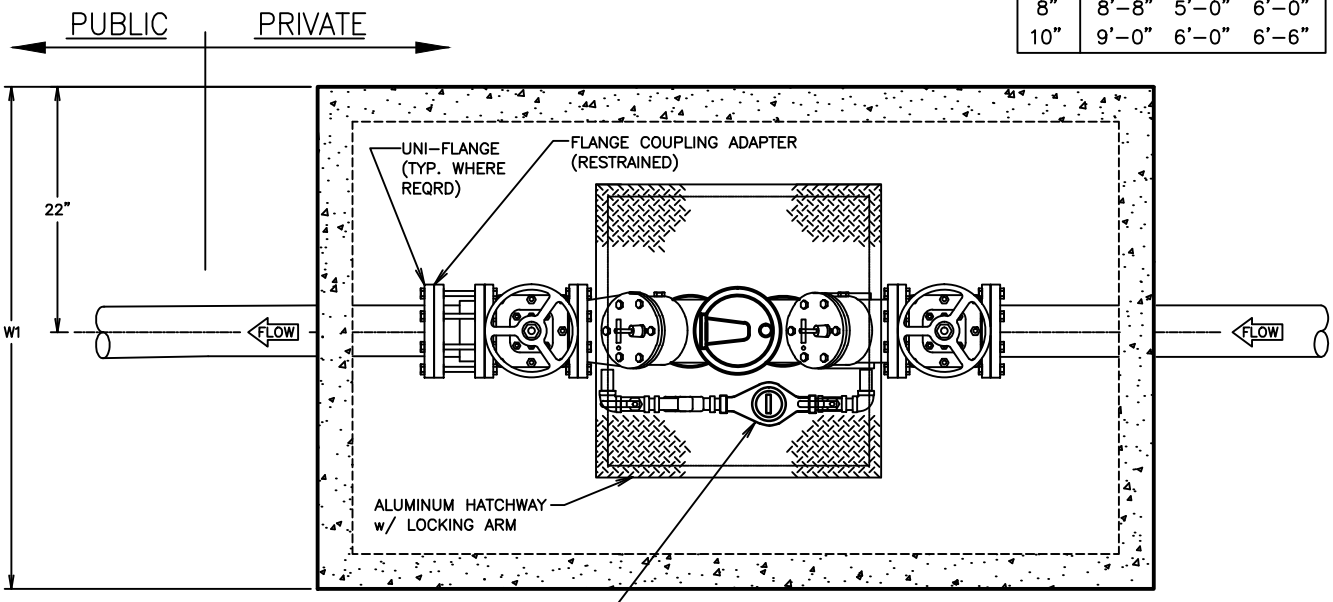

PLAN VIEW
(N.T.S)

NOTE: ASSEMBLIES 2" AND SMALLER SHALL HAVE AT LEAST A 6" CLEARANCE ON BOTH DRAIN SIDES AND ON TOP OF THE ASSEMBLY, AND 12" BELOW AND BEHIND THE ASSEMBLY. ALL ASSEMBLIES LARGER THAN 2" SHALL HAVE A MINIMUM OF 12" ON THE BACK SIDE, 24" ON THE TEST COCK SIDE, AND THE RELIEF VALVE OPENING SHALL BE AT LEAST 12" PLUS NOMIINAL SIZE OF ASSEMBLY ABOVE THE FLOOR OR HIGHEST POSSIBLE WATER LEVEL REMOVABLE TOP.

RPZ & VAULT

WACO

ENGINEERING SERVICES

REVISIONS

NO.	COMMENTS	BY	DATE
05	REMOVE SEAL	DG	09/03/2014
04	CORRECT DIRECTION OF FLOW/ADD NOTE ON ASSEMBLY CLEARANCES	DG	07/12/2010
03	UPDATED	JS	03/19/2010

BOOK PAGE NUMBER
0000

DATE
09/03/2014

NOTES:
1. ALL EXTERNAL NUTS, BOLTS AND WASHERS WILL BE STAINLESS STEEL.
2. SCREW JOINTS ON BRASS PIPE BYPASS WILL BE ACCEPTED.
3. NO SWEATED FITTINGS WILL BE ACCEPTED.
4. TO BE TESTED IN THE FIELD BY CITY OF WACO UTILITIES.
5. LID MUST BE CENTERED ON VAULT.

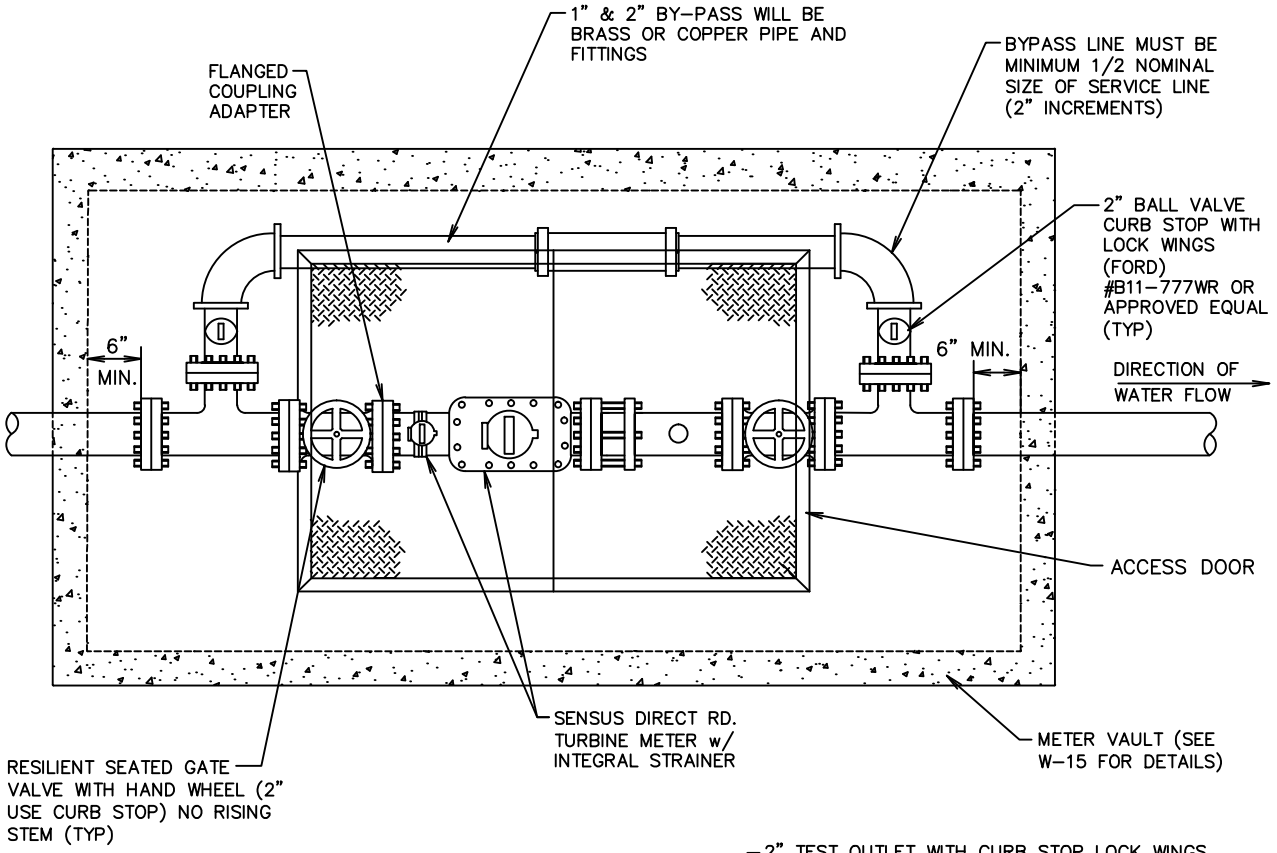

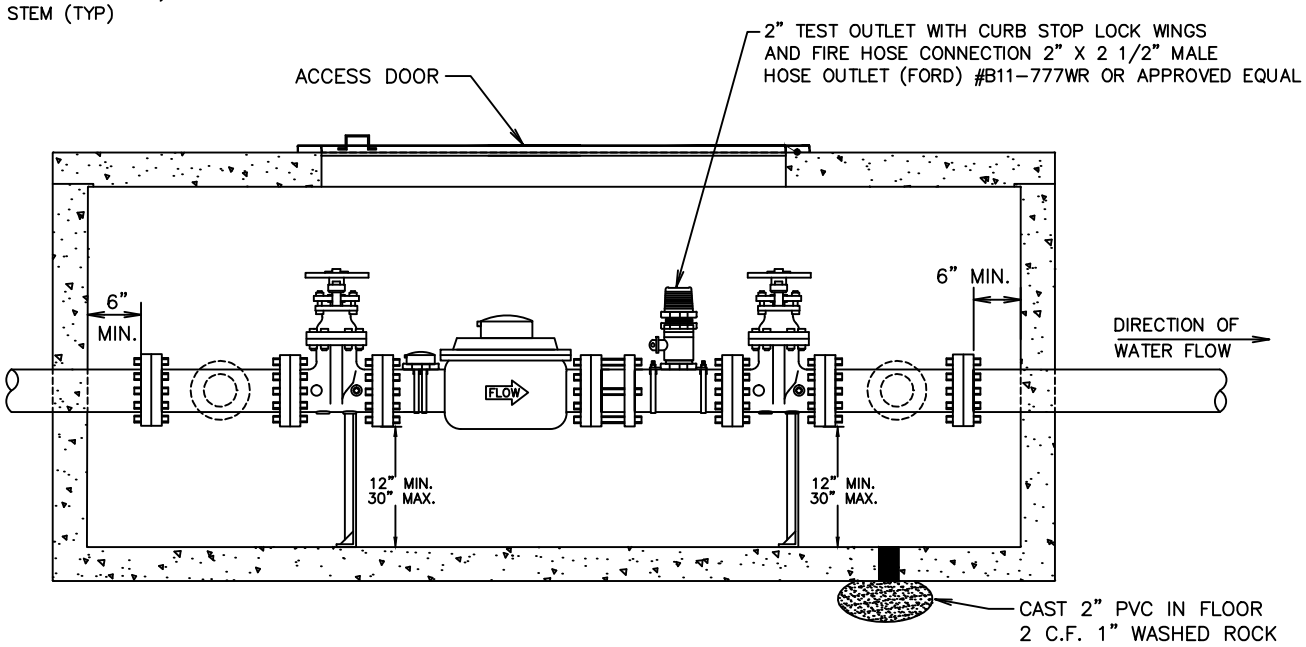

TYPICAL METER DETAIL FOR 2" AND LARGER

NTS

WACO

ENGINEERING SERVICES

REVISIONS			
NO.	COMMENTS	BY	DATE
02	REMOVE SEAL	DG	09/03/2014
01	UPDATED	DG/CA	07/03/2009

BOOK PAGE NUMBER 0000

DATE 09/03/2014

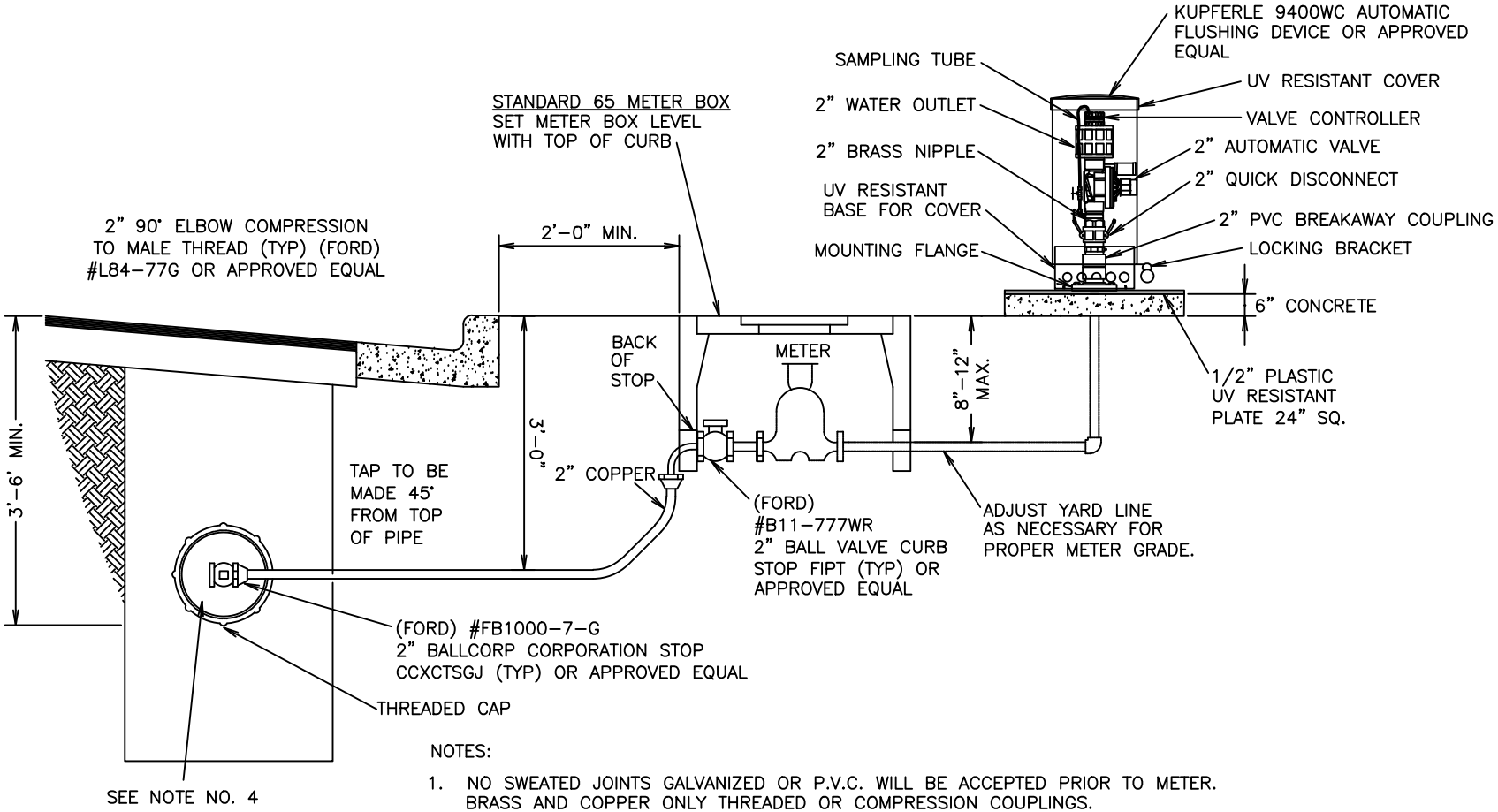

NOTES:

1. NO SWEATED JOINTS GALVANIZED OR P.V.C. WILL BE ACCEPTED PRIOR TO METER. BRASS AND COPPER ONLY THREADED OR COMPRESSION COUPLINGS.
2. EROSION CONTROL AND AREA DRAINAGE MEASURES AT FLUSHING VALVE DISCHARGE MUST BE INSTALLED TO MEET SITE CONDITIONS.
3. DISCHARGE OF CHLORINATED WATER MUST COMPLY WITH TCEQ REQUIREMENTS.
4. INSTALL 2" BALLCORP CORP STOP INTO END CAP, SO IF MAIN IS EXTENDED CAP AND 2" STOP CAN BE REMOVED.
5. THE METER IS TO BE LOCATED AS CLOSE TO THE MAIN AS POSSIBLE. (MIN. 2'-0" CLEARANCE). LOCATIONS SHOULD BE REVIEWED BY THE INSPECTOR ASSIGNED TO THE PROJECT FROM THE CITY OF WACO. VARIATIONS WE BE APPROVED ON A CASE BY CASE BASIS ONLY.

DEAD END WATER MAIN AUTOMATIC FLUSHING VALVE

(NOT TO SCALE)

W-21

WACO ENGINEERING SERVICES

REVISIONS

NO.	COMMENTS	BY	DATE
05	REMOVE SEAL	DG	09/03/2014
04	ADD DETAIL OF 9400WC KUPFERLE AUTOMATIC FLUSHING DEVICE	DG	05/01/2014
03	UPDATED	JS	03/19/2010
02	UPDATED	DG/CA	07/03/2009

BOOK PAGE NUMBER 0000

DATE 09/03/2014

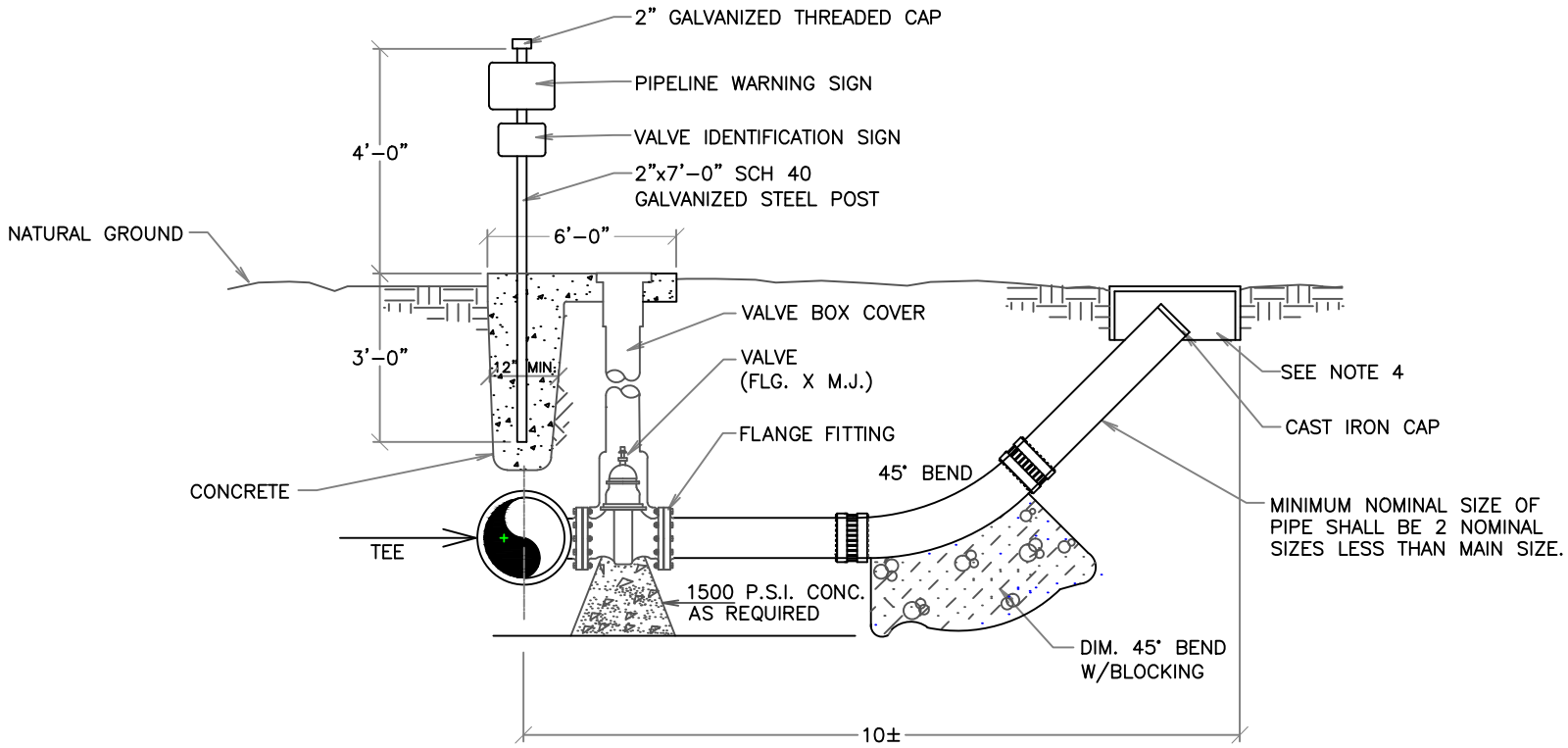

NOTES:

1. EROSION CONTROL AND AREA DRAINAGE MEASURES AT BLOW-OFF DISCHARGE MUST BE INSTALLED TO MEET SITE CONDITIONS.
2. DISCHARGE OF CHLORINATED WATER MUST COMPLY WITH TCEQ REQUIREMENTS.
3. SIZE OF BLOW-OFF PIPING TO BE SPECIFIED BY DESIGN ENGINEER IN PROJECT PLANS.
4. SIZE AND DESIGN OF BLOW-OFF ENCLOSURE SHALL SUIT THE SITE AND SYSTEM REQUIREMENTS.

BLOW-OFF ASSEMBLY
(NO SCALE)

W-22

WACO ENGINEERING SERVICES

REVISIONS

NO.	COMMENTS	BY	DATE
04	REMOVE SEAL	DG	09/03/2014
03	ADD NOTES 3 & 4	DG	05/01/2014
02	UPDATED	JS	03/19/2010

BOOK PAGE NUMBER 0000

DATE 09/08/2014

LEGEND

EXISTING GROUND

GRAVEL FOR TRENCH BACKFILL OR SAND PER STANDARD SPECIFICATIONS

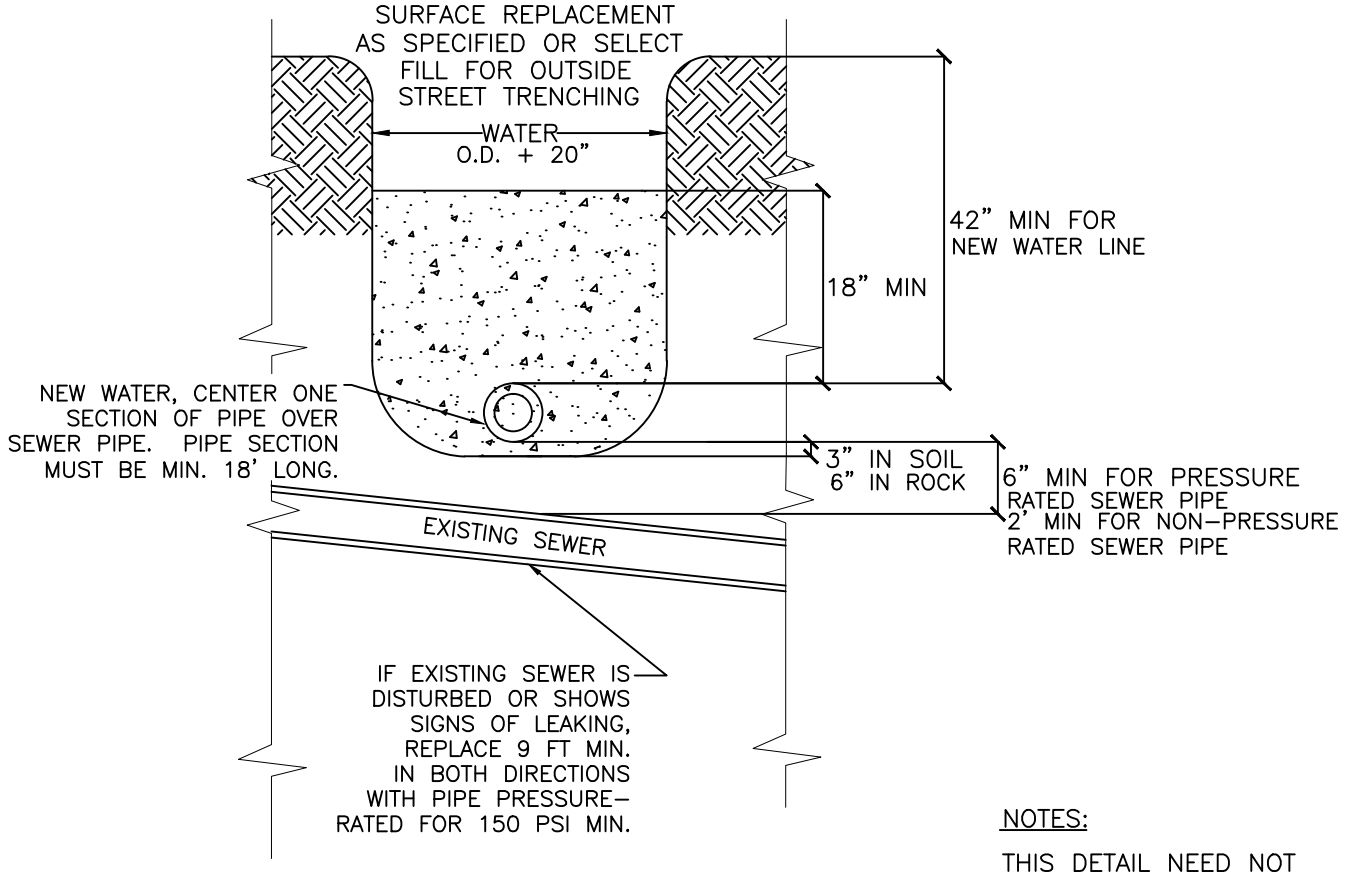

NOTES:

THIS DETAIL NEED NOT BE APPLIED FOR CROSSINGS INVOLVING WATER OR SEWER SERVICE CONNECTIONS.

EMBEDMENT FOR NEW WATER LINE CROSSING OVER AN EXISTING SEWER LINE

(NTS)

WACO

ENGINEERING SERVICES

REVISIONS

NO.	COMMENTS	BY	DATE
02	REMOVE SEAL	DG	09/03/2014
01	UPDATED	DG/CA	07/03/2009

BOOK PAGE NUMBER 0000

DATE 09/03/2014

CITY OF WACO

SEWER DETAILS

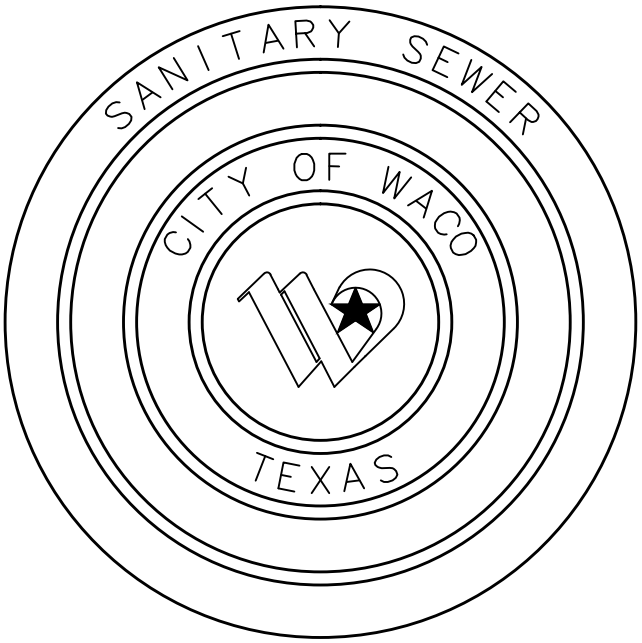

SEWER NOTES:

1. AN "S" MUST BE MARKED BY BEING STAMPED ON THE FACE OF CURB AND GUTTER, AT EACH TAP LOCATION.
2. PLEASE REFER TO W-13A & S-3B FOR SEWER CLEANOUTS SITUATED IN A TRAFFIC AREA INCLUDING SIDEWALKS.
3. BACKFILL ABOVE EMBEDMENT FOR OFF STREET TRENCHES MAY BE SELECT SPOIL MATERIAL IF IT MEETS SPECIFICATIONS.
4. BID ITEM FOR SEWER SERVICE INCLUDES EXCAVATION, WYE, SERVICE LINE, CLEANOUT, BOX, ALL FITTINGS, BACKFILL AND SURFACE REPLACEMENT.
5. ALL WYES SHALL BE SAME MATERIAL SPECIFICATION AS THE MAIN IN REGARDS TO MATERIAL, SDR AND ASTM DESIGNATIONS.
6. ALL SERVICE CONNECTIONS TO EXISTING SEWER PIPE SHALL BE MADE BY USING NON-SHEAR COUPLINGS AND RIGID FITTING.
7. ALL FLEXIBLE ADAPTERS, BENDS, AND TEES ON SERVICE LINES WILL BE ENCASED IN 6" OF CONCRETE.
8. WHERE NEW SANITARY SEWER SERVICES ARE INSTALLED UNDER EXISTING CURB AND GUTTER, THE CONTRACTOR WILL HAVE THE FOLLOWING OPTIONS:
   A. REMOVE AND REPLACE ADEQUATE AMOUNT OF CURB AND GUTTER.
   B. PLACE FLOWABLE BACKFILL BENEATH THE EXISTING CURB AND GUTTER.
   C. INSTALL SERVICE THROUGH A HOLE AT THE SAME LOCATION AS THE EXISTING PIPE, AND APPROXIMATELY THE SAME DIAMETER.
9. AT WATER AND SEWER CROSSINGS, IF POSSIBLE, SEWER WILL BE PLACED UNDER WATER. CENTER ONE JOINT OF PRESSURE PIPE UNDER WATER AND 6" MINIMUM CLEARANCE.
10. ANY UNDERGROUND DUCTILE IRON PIPE SHALL BE POLYWRAPPED.
11. STEEL PIPE CASING USED FOR AERIAL CROSSING SHALL BE PAINTED. PAINTING IS SUBSIDIARY TO THE CASING. REFER TO CITY OF WACO SPECIFICATION BOOK UNDER PAINTING SPECIFICATIONS.
12. MAINS ENTERING INTO A MANHOLE MORE THAN 24" ABOVE AN INVERT MUST HAVE A DROP FIXTURE.
13. THE FOLLOWING DETAILS HAVE BEEN DELETED FROM STANDARD SEWER DETAILS: S-5, DOG HOUSE MANHOLE & S-7, SHALLOW MANHOLE.
14. ALL SERVICE TAPS MUST BE APPROVED IN ADVANCED BY THE CITY OF WACO AND MUST BE PERFORMED UNDER THE DIRECT SUPERVISION OF A DESIGNATED CITY OF WACO UTILITY INSPECTOR. A MINIMUM OF 24 HOURS NOTICE MUST BE GIVEN.
15. PLEASE REFER TO CITY OF WACO STANDARD DETAIL W-8 & W-9 FOR AIR RELEASE VALVES ON FORCE MAINS.

MANHOLE NOTES

1. PIPES LAID THROUGH MANHOLES ARE TO BE BROKEN OUT AFTER INVERT IS CONCRETED.
2. INVERT TO BE SHAPED AND FINISHED BY HAND FLOAT AND TROWEL.
3. STANDARD 4'–0" DIAMETER MANHOLES TO BE CONSTRUCTED ON PIPE SMALLER THAN 18" IN DIAMETER.
4. STANDARD 6'–0" DIAMETER MANHOLES TO BE CONSTRUCTED ON PIPE 18" THROUGH 36" IN DIAMETER.
5. A MAXIMUM OF 2 INCHES OF MORTAR MAY BE USED TO BRING RING AND COVER TO GRADE.
6. IN STREET SECTION ONLY, A MINIMUM OF 4" & MAXIMUM 12" THROAT RINGS AND GROUT TO BE APPLIED TO MANHOLES INSIDE ROADWAY TO ALLOW FOR FUTURE ADJUSTMENT. DONUTS, RINGS, AND COVER SHALL BE SET IN A BED OF GROUT.
7. MANHOLES SHALL HAVE THE WORDS "SANITARY SEWER", "CITY OF WACO", AND THE "FLYING W" LOGO RAISED ON THE COVER.
8. WHERE MANHOLES ARE INSTALLED IN UNDEVELOPED AREAS SUCH AS FIELDS AND TXDOT ROW, STANDARD DETAIL NO. S–7A SHALL BE USED.
9. PRECAST CONCRETE MANHOLES MAY BE ACCEPTED. THE MANHOLES SHALL CONFORM TO CITY OF WACO MANHOLE DETAILS AND TO ASTM C–478. CONTRACTOR SHALL SUBMIT DESIGN INFORMATION ON PRECAST MANHOLES STAMPED BY A PROFESSIONAL ENGINEER FOR CITY ENGINEER'S APPROVAL. IF PRECAST MANHOLES ARE USED, THEY SHALL BE PLACED ON A BEDDING OF 6" MINIMUM OF 3/4" WASHED ROCK.
10. MEASUREMENT FOR PAVEMENT OF MANHOLES SHALL BE FROM THE FLOWLINE TO THE TOP SURFACE OF THE MANHOLE COVER.
11. VACUUM AIR TEST MANHOLES AFTER RING AND DONUTS ARE IN PLACE PER ASTM #C1244 (COVER OMITTED FOR TESTING).
12. SURFACE REPLACEMENT SHALL BE INCLUDED IN THE PRICE FOR THE MANHOLE.
13. MANHOLE THROAT RINGS SHALL BE SEALED ON OUTSIDE WITH SHRINK SEAL, (WRAPID SEAL OR APPROVED EQUAL). INTERIOR AND EXTERIOR SURFACES SHALL BE COVERED WITH A MINIMUM OF 50 MILS TNEMEC 436 PERMA SHIELD OR APPROVED EQUAL.
14. CAST IN PLACE MANHOLE WILL REQUIRE A SEALED DESIGN SUBMITTED BY CONTRACTOR, AND APPROVED BY CITY OF WACO ENGINEER. CAST IN PLACE BASE MUST BE MINIMUM 8" THICK WITH #4 BARS @ 12" OC–EW (EACH WAY) AND SHALL EXTEND 1' BEYOND MANHOLE.
15. MANHOLES ARE REQUIRED APPROXIMATELY EVERY 400 LF. ALONG SEWER MAINS OF ALL SIZES.
16. 3/4" WASHED ROCK BEDDING SHALL BE FREE OF DELETERIOUS MATERIAL AND SHALL COMPLY WITH THE FOLLOWING:

Grade No. 3 Maximum Nominal Size 1 in. (25 mm)		
Sieve		Percentage Passing
1 1/2 in.	(37.5 mm)	95 - 100%
3/4 in.	(19.0 mm)	60 - 90%
1/2 in.	(12.5 mm)	25 - 60%
No. 4	(4.75 mm)	0 - 5%

WACO

ENGINEERING SERVICES

REVISIONS

NO.	COMMENTS	BY	DATE
06	REMOVE SEAL	DG	09/03/2014
05	REMOVE NOTE 12/CHANGE NOTE 16 TO 17, ADD NEW NOTE 16.	DG	05/01/2014
04	REVISE NOTE #11	DG	02/01/2013
03	ADDED NOTE #16 WITH TABLE	DG	09/09/2011
02	UPDATED #12 TO MEET ASTM C–478 REGARDING REBAR	DG	05/04/2010

BOOK PAGE NUMBER 0000

DATE 09/03/2014

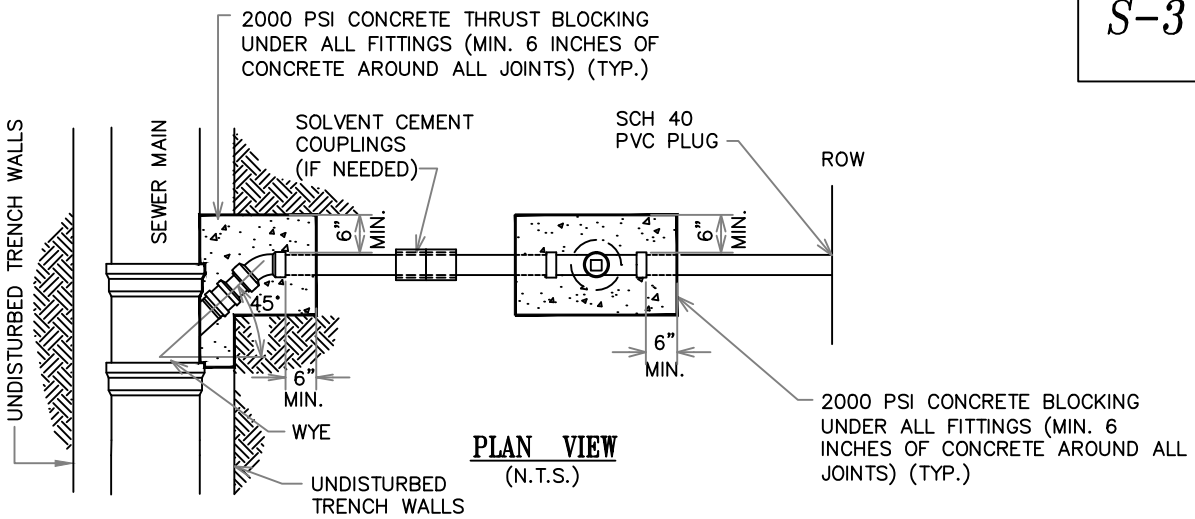

PLAN VIEW
(N.T.S.)

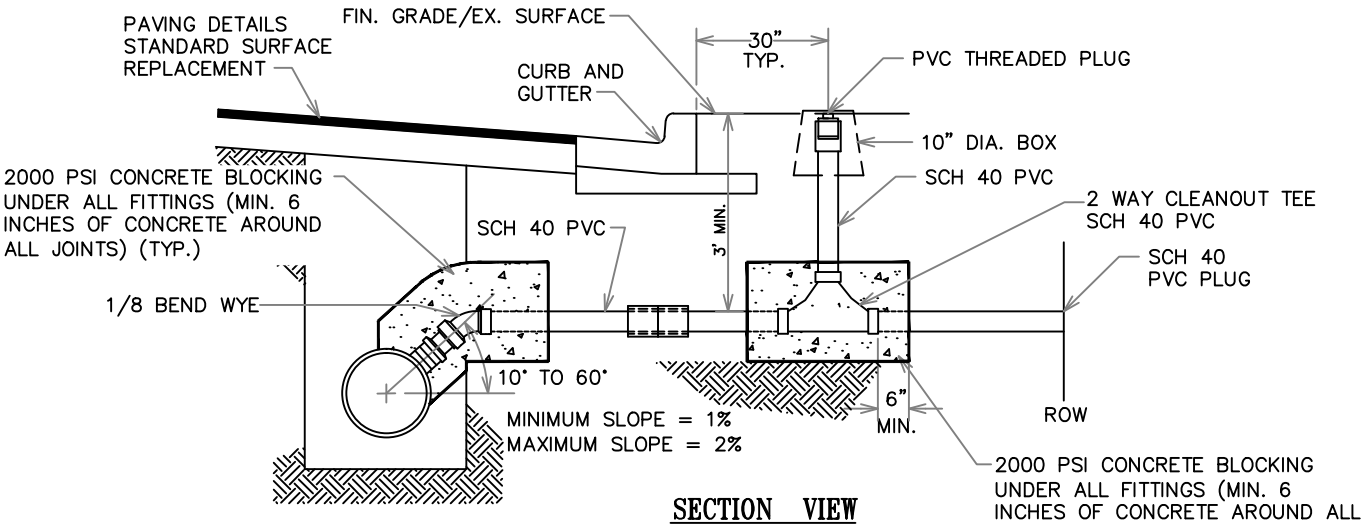

SECTION VIEW
(N.T.S.)

NOTES:

1. EXISTING MAIN REQUIRES A GASKETED, RIGID, WYE AND A COUPLING THAT RESISTS SHEARING.
2. 4" RESIDENTIAL SERVICE REQUIRES SINGLE 2 WAY CLEAN OUT.
3. CLEANOUTS IN ALLEYS TO BE 18" ABOVE SURFACE, NEXT TO PROPERTY LINE, WITH NO BOX.

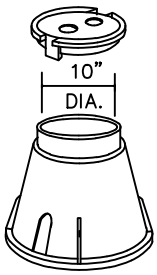

LID MUST HAVE SOME FERROUS (IRON) MATERIAL CAST INTO IT, OR ATTACHED TO BOTTOM OF LID TO PROVIDE DETECTION BY MAGNETIC LOCATORS.

CLEANOUT BOX & COVER - NON TRAFFIC AREAS WITH "SEWER" ON THE LID

PLEASE REFER TO W-13A & S-3B WHEN 4" PVC SLEEVE IS EXPOSED TO TRAFFIC OR IS IN THE SIDEWALK

SEWER SERVICE - RESIDENTIAL

(N.T.S.)

WACO

ENGINEERING SERVICES

REVISIONS

NO.	COMMENTS	BY	DATE
03	REMOVE SEAL	DG	09/03/2014
02	ADD 3' MIN FROM SURFACE TO PVC SERVICE PIPE.	DG	11/20/2013
01	UPDATED	DG/CA	09/04/2009

BOOK PAGE NUMBER 0000

DATE 09/03/2014

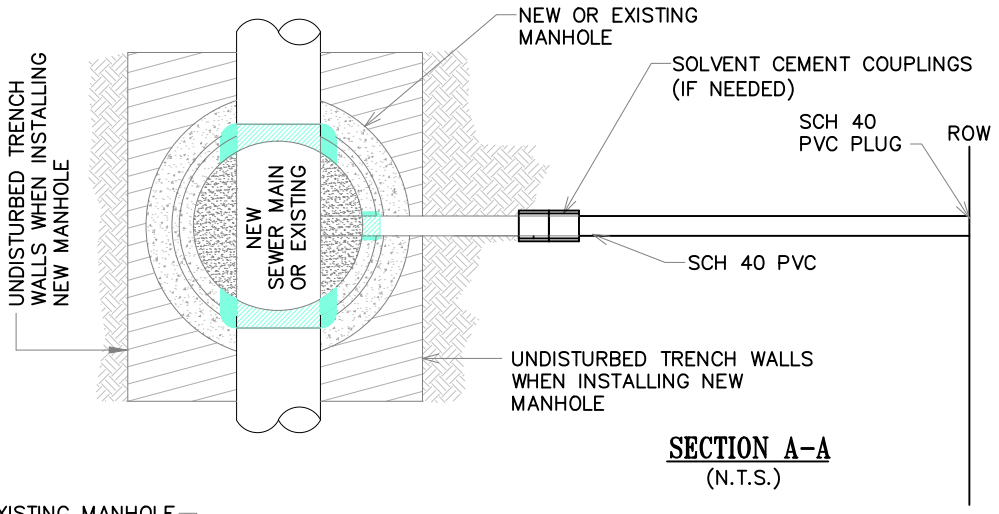

SECTION A-A
(N.T.S.)

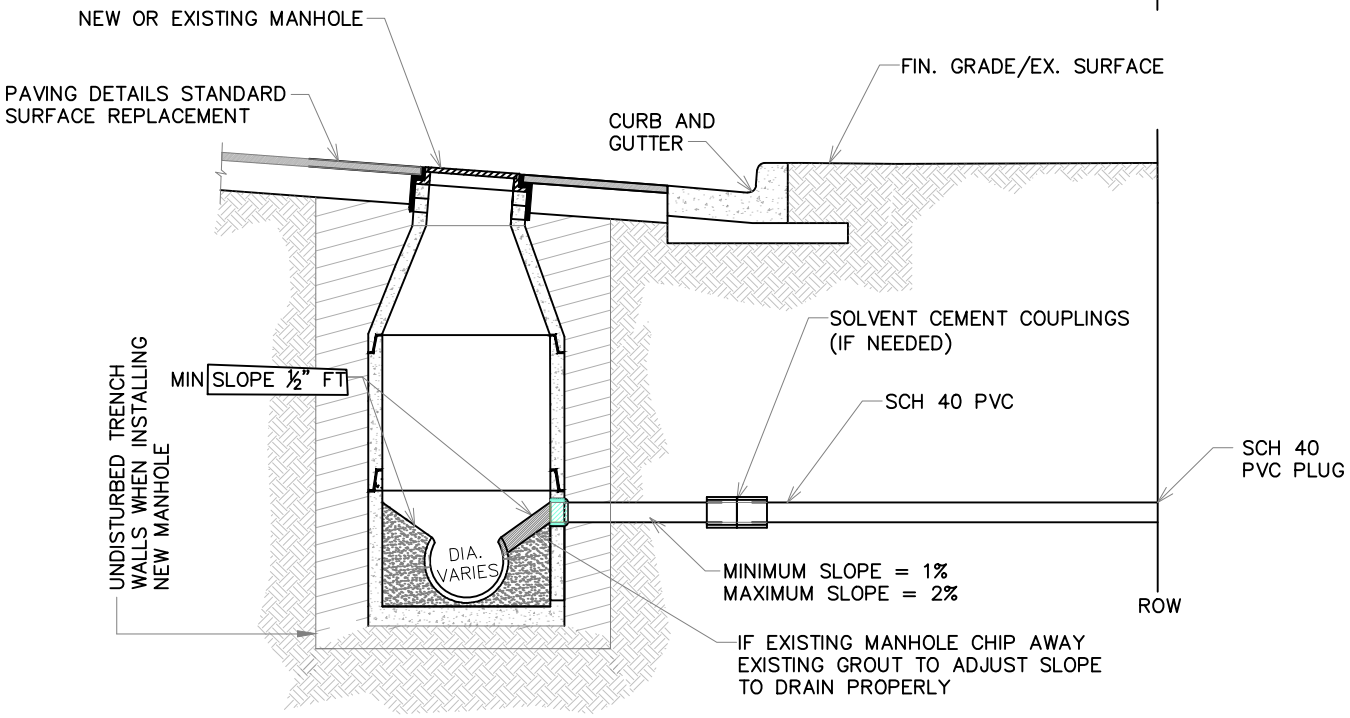

SECTION VIEW
(N.T.S.)

NOTES:
1. EXISTING MAIN REQUIRES A GASKETED, RIGID, WYE AND NON SHEER COUPLINGS.
2. 6" SERVICE TO MANHOLE REQUIRES NO CLEAN-OUT.
3. 6" SERVICE MUST CONNECT TO A MAIN IN A MANHOLE.

EXISTING SEWER SERVICES - COMMERCIAL

(N.T.S.)

WACO

ENGINEERING SERVICES

REVISIONS

NO.	COMMENTS	BY	DATE
02	REMOVE SEAL	DG	09/03/2014
01	UPDATED	DG/CA	09/03/2009

BOOK PAGE NUMBER 0000

DATE 09/03/2014

S-3B

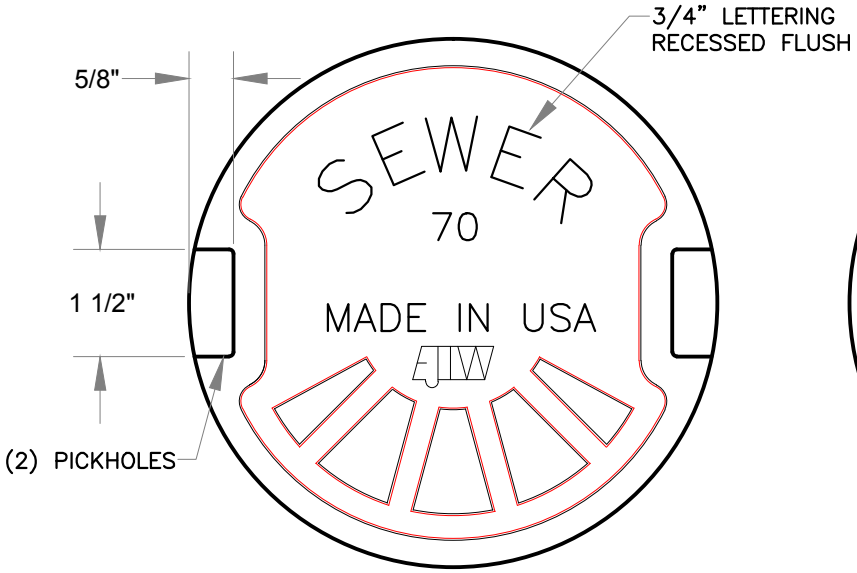

COVER TOP VIEW
(NOT TO SCALE)

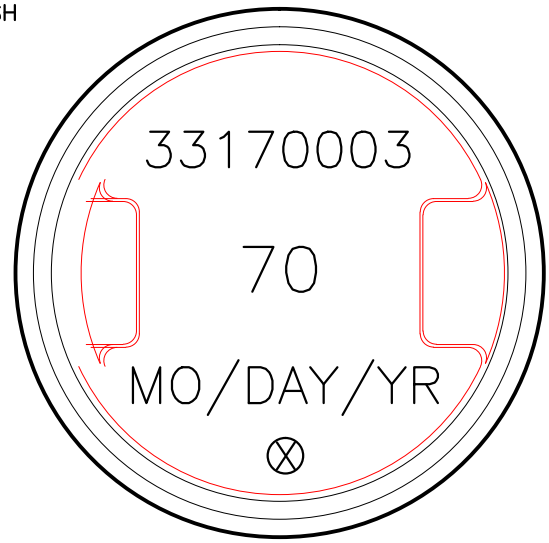

COVER BACK VIEW
(NOT TO SCALE)

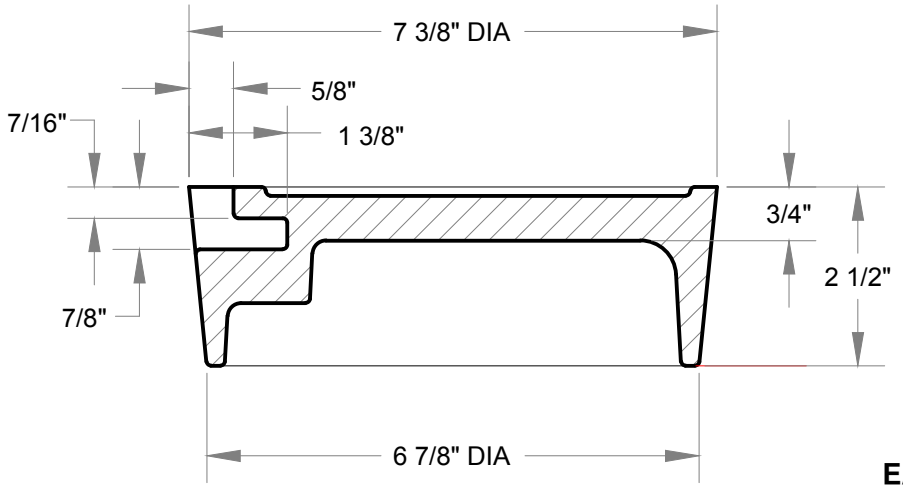

COVER SECTION
(NOT TO SCALE)

NOTE:
VALVE BOX SHOWN ON W-13A

EAST JORDAN IRON WORKS, INC.
PRODUCT #33170003 OR APPROVED EQUAL

CLEANOUT COVER - TRAFFIC AREAS

(NOT TO SCALE)

WACO

ENGINEERING SERVICES

REVISIONS

NO.	COMMENTS	BY	DATE
03	REMOVE SEAL	DG	09/03/2014
02	MAKE CORRECTIONS TO DIMENSIONS	DG	07/15/2013
01	UPDATED	DG/CA	09/04/2009

BOOK PAGE NUMBER
0000

DATE
09/03/2014

LEGEND

EXISTING GROUND

GRAVEL FOR TRENCH BACKFILL OR SAND PER STANDARD SPECIFICATIONS

CEMENT STABILIZED SAND. MIXTURE MUST HAVE MINIMUM 10% CEMENT BASED ON LOOSE DRY WEIGHT VOLUME (AT LEAST 2.5 BAGS OF CEMENT PER C.Y. OF MIXTURE).

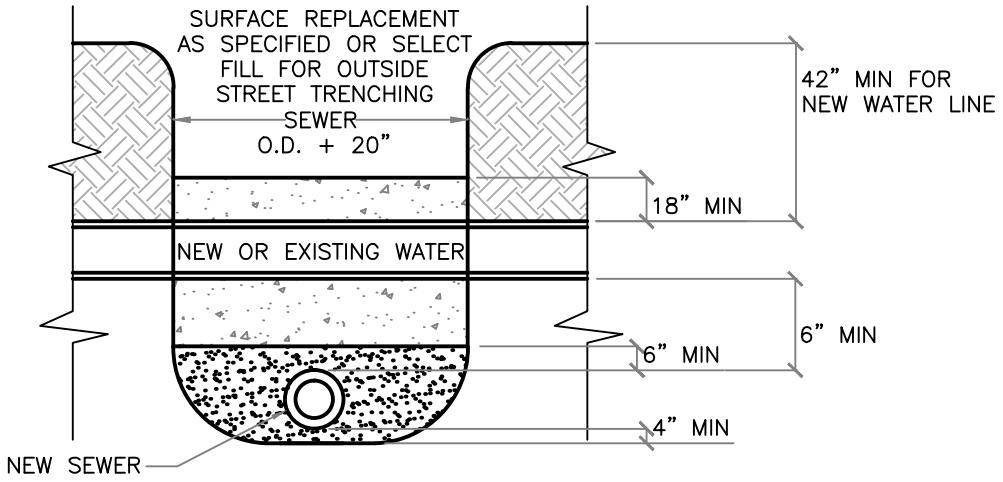

SECTION

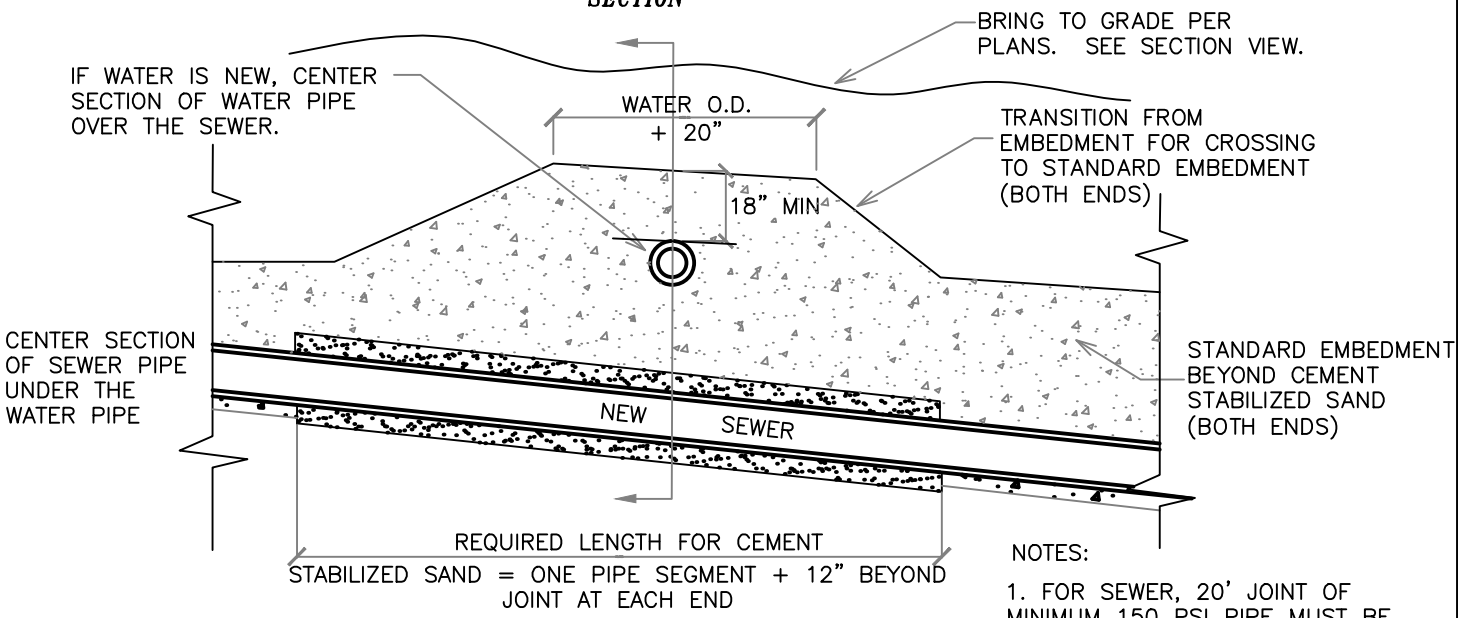

SIDEVIEW
N.T.S.

NOTES:

1. FOR SEWER, 20' JOINT OF MINIMUM 150 PSI PIPE MUST BE CENTERED UNDER WATER LINE.

2. THIS DETAIL NEED NOT TO BE APPLIED FOR CROSSINGS INVOLVING WATER OR SEWER SERVICE CONNECTIONS.

EMBEDMENT FOR NEW SEWER CROSSING UNDER A NEW OR EXISTING WATER LINE

WACO

ENGINEERING SERVICES

REVISIONS

NO.	COMMENTS	BY	DATE
02	REMOVE SEAL	DG	09/03/2014
01	UPDATED	DG/CA	09/03/2009

BOOK PAGE NUMBER 0000

DATE 09/03/2014

NOTES:
1. WATER MAINS SHALL BE LAID TO PROVIDE A MINIMUM VERTICAL DISTANCE OF 18 INCHES BETWEEN THE BOTTOM OF THE UPPER PIPE AND THE CROWN OF THE LOWER PIPE.
2. ARRANGE CROSSING SO THAT THE SEWER PIPE JOINTS AND THE WATER MAIN PIPE JOINTS ARE EQUIDISTANT FROM THE POINT OF CROSSING (PIPES CENTERED ON THE CROSSING).
3. WHERE PROPOSED STORM SEWER MEETS WATER MAIN REQUIREMENTS, CASING PIPE SHALL BE OMITTED.
4. PLEASE REFER TO OTHER SPECS FOR BEDDING REQUIREMENT.

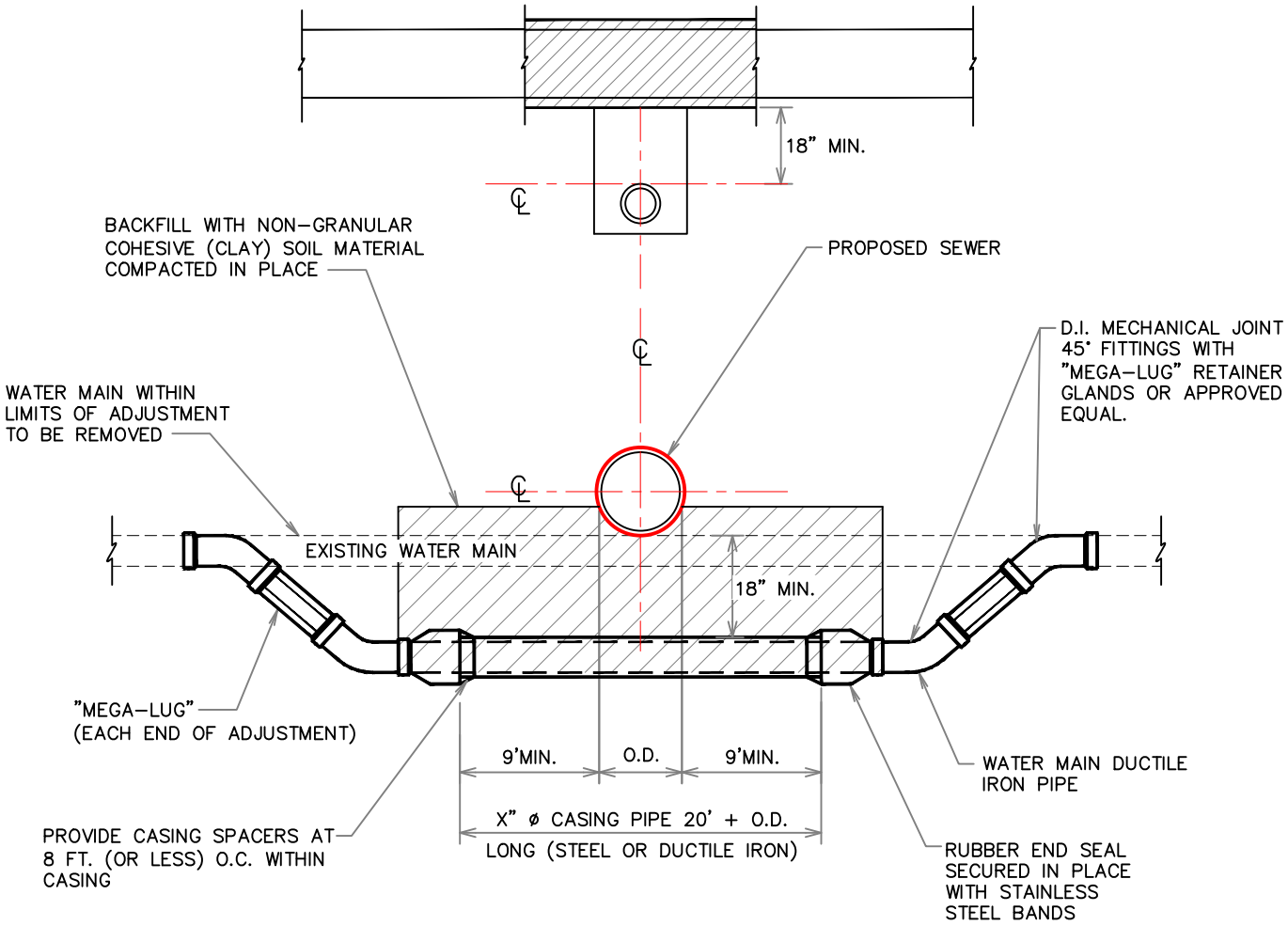

EMBEDMENT FOR NEW SEWER CROSSING ON TOP OF A NEW OR EXISTING WATER LINE

(N.T.S.)

WHEN NO OTHER OPTIONS AVAILABLE ONLY WITH PRIOR APPROVAL BY CITY ENGINEER

WACO

ENGINEERING SERVICES

REVISIONS

NO.	COMMENTS	BY	DATE
02	REMOVE SEAL	DG	09/03/2014
01	UPDATED	DG/CA	09/03/2009

BOOK PAGE NUMBER 0000

DATE 09/03/2014

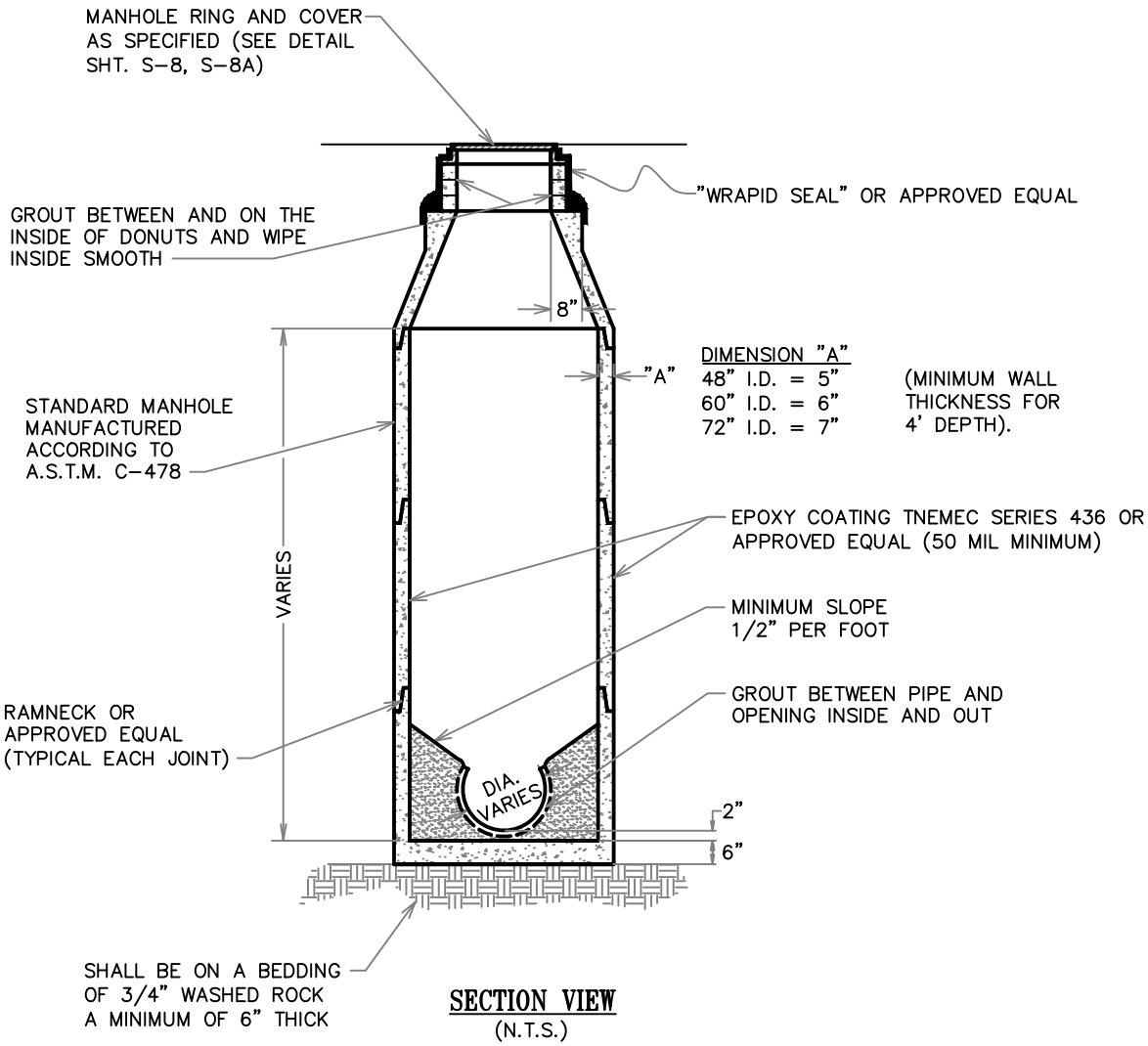

SECTION VIEW
(N.T.S.)

NOTES:
1. PLEASE REFER TO STANDARD DETAIL S-2.
2. GASKET JOINT COMPOUND MEETING CITY OF WACO SPECIFICATIONS SHALL BE PLACED AT EACH JOINT PRIOR TO PLACING NEXT SECTION, ENSURE GASKET MATERIAL IS EXTRUDED.

PRECAST REINFORCED CONCRETE MANHOLE

(N.T.S.)

WACO

ENGINEERING SERVICES

REVISIONS

NO.	COMMENTS	BY	DATE
08	REMOVE SEAL	DG	09/03/2014
07	REVISE NOTE 1/ADD NOTE ABOUT WALL THICKNESS.	DG	05/01/2014
06	REVISED CONE DIA. FROM 30" TO 34".	DG	09/03/2013
05	REVISED & MOVED NOTE CALLING OUT A.S.T.M. C-478	DG	02/15/2013

BOOK PAGE NUMBER 0000

DATE 09/03/2014

MANHOLE CONFIGURATION

1. ALL MANHOLES CONSTRUCTED IN AREAS SUBJECT TO TRAFFIC SHALL BE CONSTRUCTED WITHIN 5/8" OF THE ADJACENT SURFACE.

2. MANHOLES CONSTRUCTED IN NON TRAFFIC AREAS SHALL BE CONFIGURED IN ONE OF THE FOLLOWING 3 WAYS:

   - THE LIDS FOR MANHOLES LOCATED BEHIND CURB SHALL BE CONSTRUCTED 2" ABOVE ADJACENT GRADE.
   - MANHOLES CONSTRUCTED IN RURAL AREAS SHALL COMPLY WITH STANDARD DETAIL S-7A.
   - THE LIDS FOR MANHOLES IN AREAS SUBJECT TO FLOODING SHALL BE RAISED ACCORDINGLY. THIS WILL NEED TO BE DESIGNED FOR EACH SITE, SPECIFICALLY.
   - THE PROJECT DRAWINGS SHALL CLEARLY INDICATE THE CONFIGURATION OF EACH MANHOLE SHOWN.

3. THE BACKFILL UNDER THE CONCRETE SLAB AS DETAILED ON S-7A SHALL BE 6" THICK TRENCH BACKFILL (BANK RUN GRAVEL), COMPACTED TO MATCH ADJACENT SURFACE.

4. MANHOLES IN UNDEVELOPED AREAS WILL REQUIRE LOCATOR SIGNS ON INDICATOR POSTS, SEE STANDARD DETAIL G-9.

5. MANHOLES LOCATED IN AREAS SUBJECT TO FLOODING REQUIRE GASKETED LIDS, SEE STANDARD DETAIL S-8A.

6. THE DESIGN ENGINEER SHALL VERIFY THE CONDITIONS SPECIFIC TO EACH MANHOLE SITE AND ENSURE THE APPROPRIATE CONFIGURATION IS SHOWN. ANY QUESTIONS SHALL BE SUBMITTED TO, AND DECIDED UPON, BY THE CITY OF WACO ENGINEER.

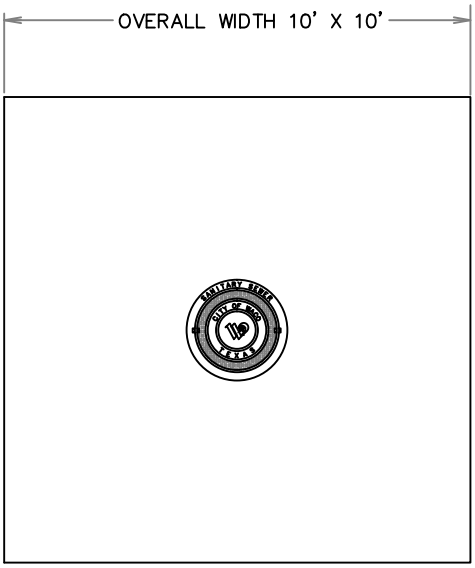

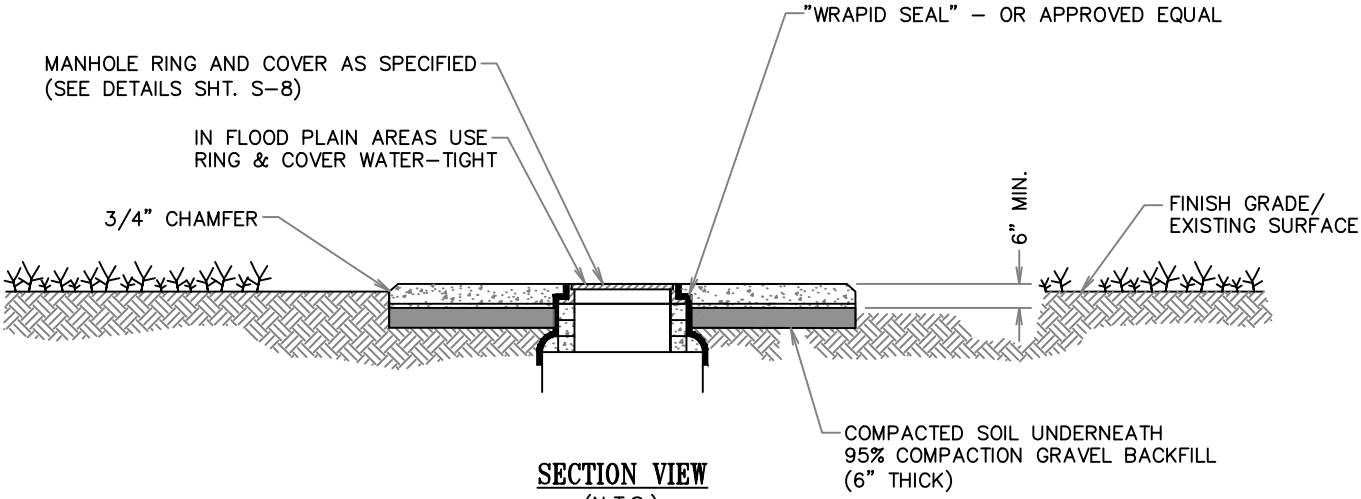

SECTION VIEW
(N.T.S.)

NOTES:

1. THE CITY OF WACO REQUIRES MANHOLE SIGNS MOUNTED ON SIGN POLES FOR UNDEVELOPED AREAS. THE CONTRACTOR WILL COORDINATE WITH THE CONSTRUCTION INSPECTOR TO HAVE UTILITIES INSTALL THESE SIGNS.

2. #3 BARS @ 12" OC–EW (EACH WAY) WITH CORNER BARS.

3. 4 EA. 3' SECTIONS #3 BARS PLACED ON DIAGONAL AROUND MANHOLE LID.

MANHOLE IN UNDEVELOPED AREAS

(N.T.S.)

WACO

ENGINEERING SERVICES

REVISIONS

NO.	COMMENTS	BY	DATE
02	REMOVE SEAL	DG	09/03/2014
01	UPDATED	DG/CA	09/03/2009

BOOK PAGE NUMBER
0000

DATE
09/03/2014

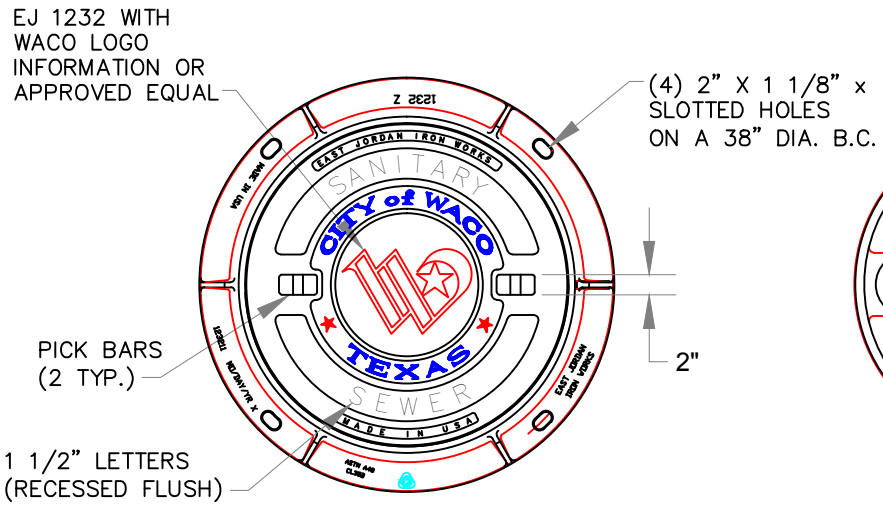

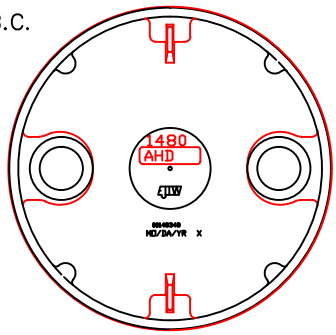

COVER BACK

SPECIAL MACHINE OD & HEIGHT

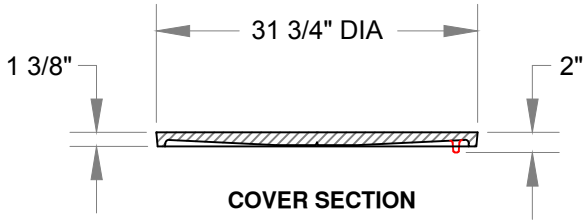

COVER SECTION

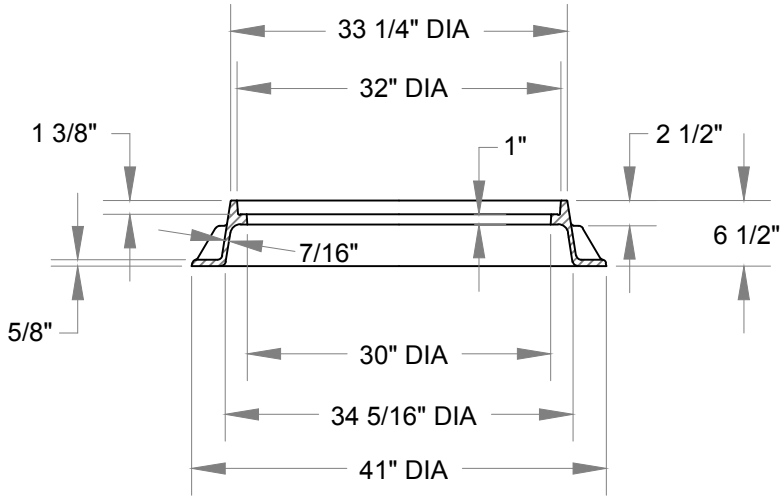

FRAME SECTION

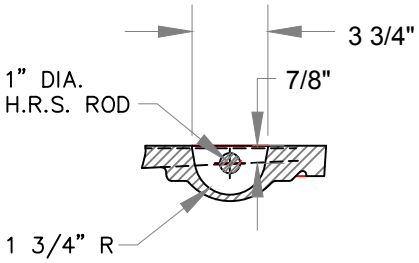

PICKBAR DETAIL

MANHOLE RING AND COVER

(NO SCALE)

WACO

ENGINEERING SERVICES

REVISIONS

NO.	COMMENTS	BY	DATE
04	REMOVE SEAL	DG	09/03/2014
03	DESIGN AND DIMENSIONS REVISED	DG	07/16/2013
02	UPDATED	DG	03/22/2013
01	UPDATED	DG/CA	09/03/2009

BOOK PAGE NUMBER 0000

DATE 09/03/2014

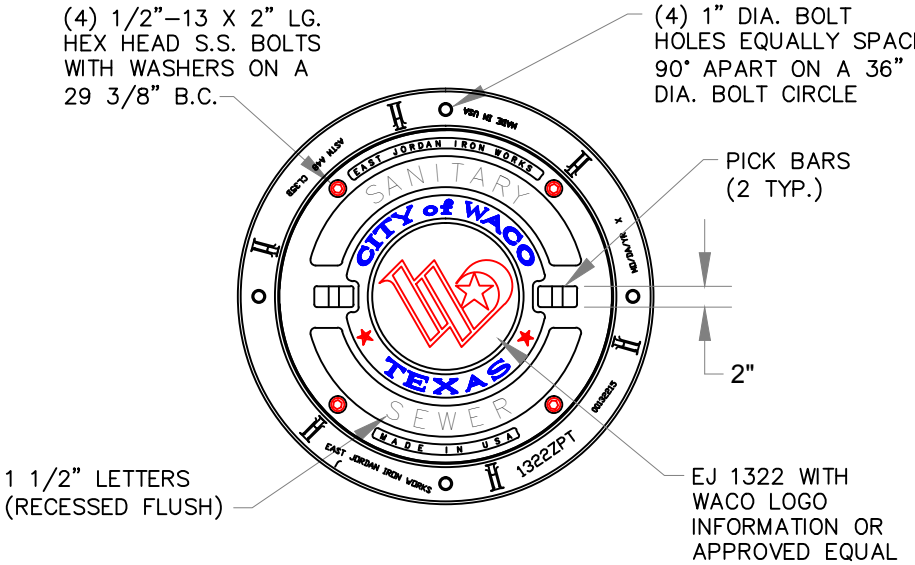

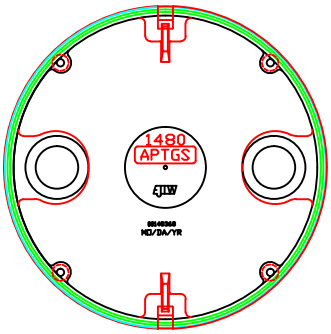

COVER BACK

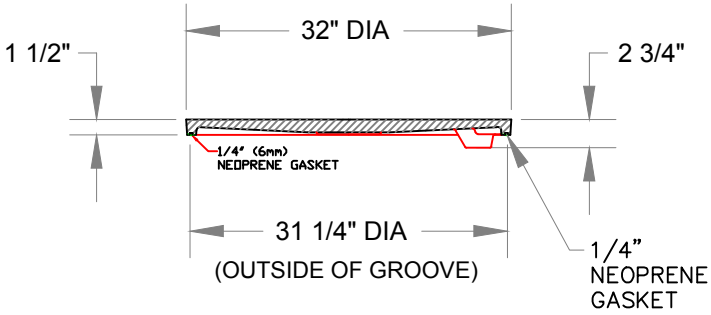

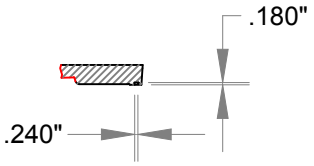

GASKET GROOVE DETAIL

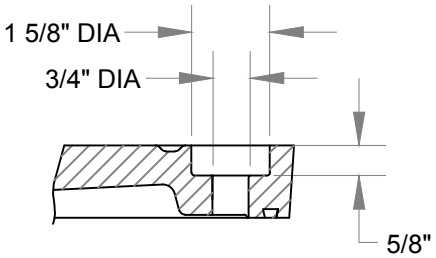

BOLT HOLE DETAIL

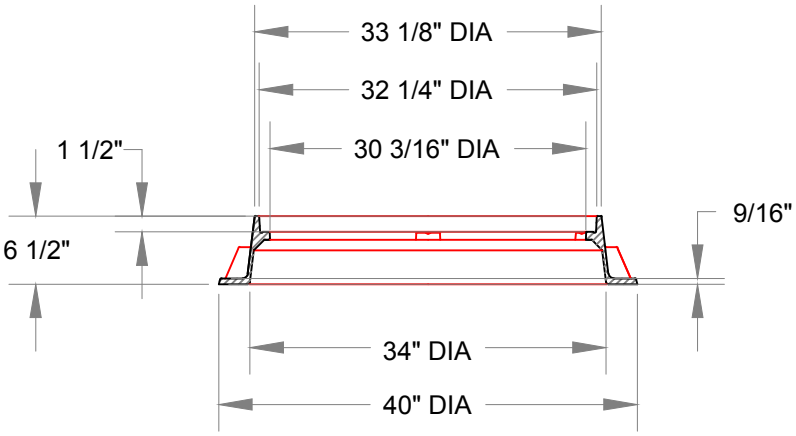

SECTION VIEW

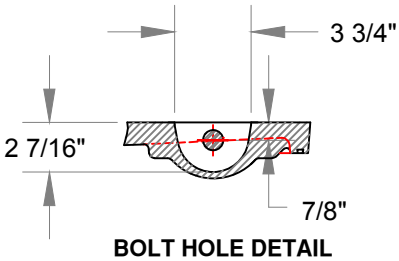

BOLT HOLE DETAIL

WATERTIGHT/AIRTIGHT MANHOLE RING AND COVER

(NO SCALE)

WACO

ENGINEERING SERVICES

REVISIONS

NO.	COMMENTS	BY	DATE
05	REMOVE SEAL	DG	09/03/2014
04	DIMENSIONS IN SECTION VIEW: 9/16" & 1 1/2" SWITCHED.	DG	09/03/2013
03	DESIGN AND DIMENSIONS REVISED	DG	07/16/2013
02	UPDATED	DG	03/22/2013

BOOK PAGE NUMBER 0000

DATE 09/03/2014

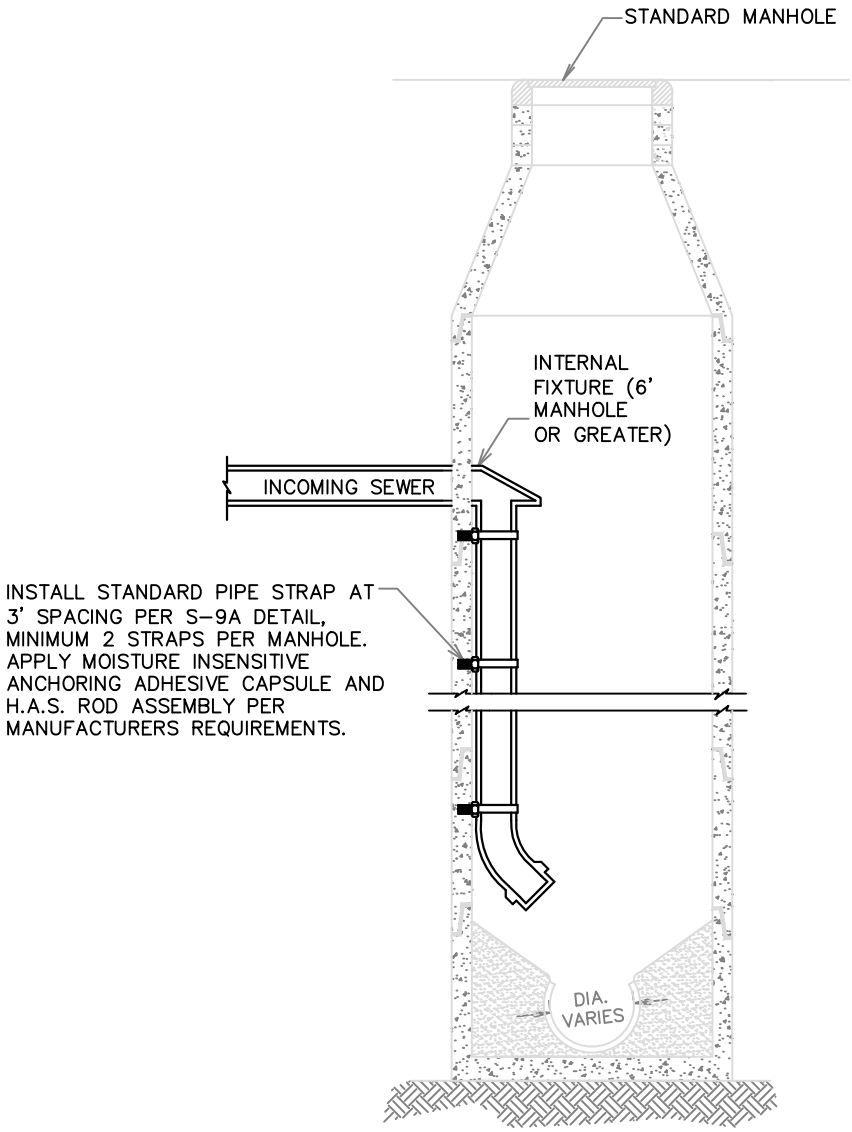

NOTE:
OUTFLOW OF DROP FIXTURE SHALL BE 24" MAXIMUM SPACING ABOVE FLOWLINE OF MANHOLE. IF OUTFLOW PIPE IS LARGER THAN 24", INSTALL OUTFLOW OF DROP FIXTURE AT TOP OF OUTFLOW MAIN.

SECTION VIEW
(N.T.S.)

INTERNAL DROP FIXTURE
(N.T.S.)

WACO

ENGINEERING SERVICES

REVISIONS

NO.	COMMENTS	BY	DATE
02	REMOVE SEAL	DG	09/03/2014
01	UPDATED	DG/CA	09/03/2009

BOOK PAGE NUMBER
0000

DATE
09/03/2014

HVA Adhesive Capsule Anchor

1. Drill holes with ANSI B212.15 matched tolerance carbide tipped drill bits with drill in roto-hammer mode or use a matched tolerance diamond core drill bit of diameter specified by Hilti.
2. Drilled hole specifications (diameter & depth) shall comply with Hilti specification or ICC ESR 1562.
3. Allowable loads may be increased by 33-1/3% for short-term wind or seismic load resistance IAW ICC ESR 1682 unless not permitted by the applicable building code.
4. When conducted, proof test anchors in the field to 150-200% of Hilti published allowable tension load unless noted otherwise in a proof test load table. Torque testing is not permitted.
5. Anchors shall be tightened with a calibrated torque wrench. Use of an impact wrench is not permitted.
6. Contact Hilti Technical Support at 1-800-879-8000 for installation instructions in submerged water conditions.
7. Contact Hilti Technical Support at 1-800-879-8000 for additional assistance with HVA adhesive anchor installations.
8. Installation instructions:
   a. For HVA Adhesive Capsules with H.A.S. Threaded Rods:
1. Drill anchor hole with a carbide bit (see note 1 above), to specified embedment depth.
2. Clean hole with compressed air or blow out pump. Insert nozzle to bottom of hole.
3. If using matched tolerance core bit, remove standing water from hole.
4. Insert appropriate HVU capsule into hole with pointed end first. Capsule length is longer than standard embedment and will protrude from hole. Do not cut off any part of the HVU capsule.
5. Thread nut onto rod.
6. Place a washer on first nut and thread black setting nut down on washer.
7. Tighten nuts together so that black setting washer is at top of rod.
8. Insert square drive shaft into hammer drill and attach proper impact socket.
9. With hammer drill on rotary hammer, engage top nut of HAS rod assembly and rotohammer rod through capsule(s) into the hole. Stop drill rotation immediately upon reaching bottom of hole.
10. Do not disturb or load anchor before curing time elapses.

HVA Installation Specification Table for H.A.S. Rods

Details \ HAS Rod Size		in.	3/8	1/2	5/8	3/4	7/8	1	1-1/4
d_{bit} : nominal bit diameter		in.	15/32	9/16	11/16	7/8	1	1-1/8	1-3/8
h_{nom} = std. depth of embed. = capsule length		in.	3-1/2	4-1/4	5	6-5/8	6-5/8	8-1/4	12
t : max. thickness fastened		in.	1	1-1/2	1-3/4	2	2-1/4	2-1/2	2-3/4
t_{max} : max. tightening torque	All Hilti Rods	ft-lb	18	30	75	150	175	235	400
h : minimum base material thickness	$h_{ef}=h_{nom}$	in.	5-1/4	6-3/8	7-1/2	10	10	12-3/8	18
	$h_{ef}\neq h_{nom}$	in.	$1.0h_{ef}+2$	$1.0h_{ef}+2$	$1.0h_{ef}+2$	$1.0h_{ef}+2$	$1.0h_{ef}+2$	$1.0h_{ef}+2\ 1/4$	$1.0h_{ef}+3$
Recommended Hilti Rotary Hammer Drill			TE-5,15, 18M,25	TE-18M,25,55,76		TE-55, 76		TE-76	

For SI: 1 inch - 25.4mm, 1ft-lb = 1.4 Nm

Curing Time Table (Approximate)

Approx. Curing Time	Base Material Temperature
20 Minutes	ABOVE 68° F/20°C
30 Minutes	50° F/10° C
1 Hour	32° F/0° C
5 Hour	23° F/-5° C

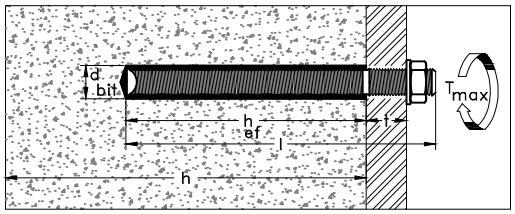

HILTI HVA ADHESIVE CAPSULE ANCHOR

OR APPROVED EQUAL

INSTALLATION INSTRUCTIONS:

1. SET THE DRILL DEPTH GAUGE AND DRILL A HOLE TO THE REQUIRED HOLE DEPTH. IMPORTANT: CLEAN OUT DUST AND DEBRIS. USE COMPRESSED AIR OR VACUUM AT BOTTOM OF THE HOLE. WHEN USING THE HILTI MATCHED TOLERANCE DIAMOND CORE BIT, IMMEDIATELY REMOVE STANDING WATER.
2. INSERT APPROPIATE DIAMETER HVU ADHESIVE CAPSULE INTO PRE-DRILLED HOLE IN BASE MATERIAL. NOTE: THE BEST METHOD FOR SETTING MULTIPLE CAPSULES IS TO CRUSH THE FIRST CAPSULES(S) INTO THE HOLE AND THEN INSERT THE NEXT CAPSULE. DO NOT CUT OFF CAPSULES PARTIALLY PROTRUDING FROM THE HOLE.
3. CAPSULE LENGTH IS LONGER THAN STANDARD EMBED, DEPTH AND WILL PROTRUDE FROM THE HOLE.
4. THREAD A H.A.S. NUT ON THE H.A.S. ROD. PLACE A WASHER ON TOP OF THE FIRST NUT AND THEN THREAD A BLACK SETTING NUT DOWN ON TOP OF THE WASHER. TIGHTEN THE TWO NUTS TOGETHER "LOCKING" THE WASHER BETWEEN THEM. THE TOP NUT SHOULD BE FLUSH WITH THE TOP OF THE ROD.
5. INSERT A SQUARE DRIVE SHAFT INTO THE HAMMER DRILL AND ATTACH THE PROPER IMPACT SOCKET. AT THE ROTARY HAMMER DRILL SETTING, ENGAGE THE TOP NUT OF THE HAS ROD ASSEMBLY WITH THE SOCKET AND DRIVE THE ROD DOWN THROUGH THE CAPSULE(S). STOP DRILL ROTATION IMMEDIATELY UPON REACHING BOTTOM OF HOLE.
6. DO NOT DISTRUB OR LOAD THE SET ANCHOR BEFORE THE SPECIFIED CURING TIME ELPASES.

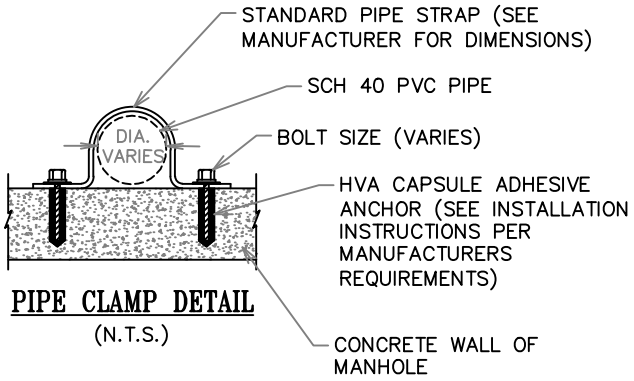

PIPE CLAMP DETAIL

(N.T.S.)

DROP FIXTURE ANCHOR

(N.T.S.)

WACO

ENGINEERING SERVICES

REVISIONS

NO.	COMMENTS	BY	DATE
02	REMOVE SEAL	DG	09/03/2014
01	UPDATED	DG/CA	09/03/2009

BOOK PAGE NUMBER 0000

DATE 09/03/2014

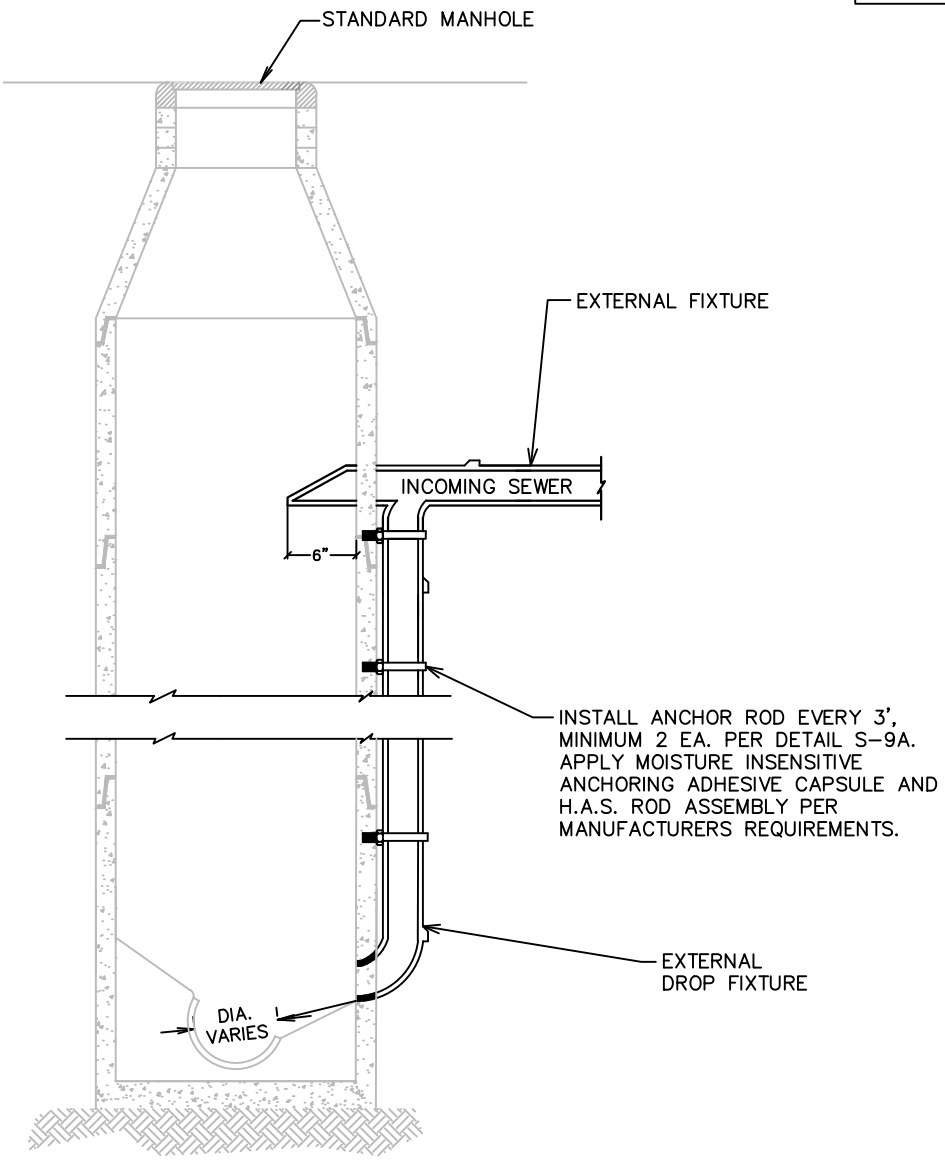

SECTION VIEW
(N.T.S.)

NOTE:
OUTFLOW OF DROP FIXTURE SHALL BE 24" MAXIMUM SPACING ABOVE FLOWLINE OF MANHOLE. IF OUTFLOW PIPE IS LARGER THAN 24", INSTALL OUTFLOW OF DROP FIXTURE AT TOP OF OUTFLOW MAIN.

EXTERNAL DROP FIXTURE

(N.T.S.)

EXTERNAL FIXTURE 6' MH OR GREATER

WACO

ENGINEERING SERVICES

REVISIONS

NO.	COMMENTS	BY	DATE
03	REMOVE SEAL	DG	09/03/2014
02	EXTERNAL FIXTURE CAN BE USED ON ANY SIZE MANHOLE	DG	05/04/2010
01	UPDATED	DG/CA	09/03/2009

BOOK PAGE NUMBER
0000

DATE
09/03/2014

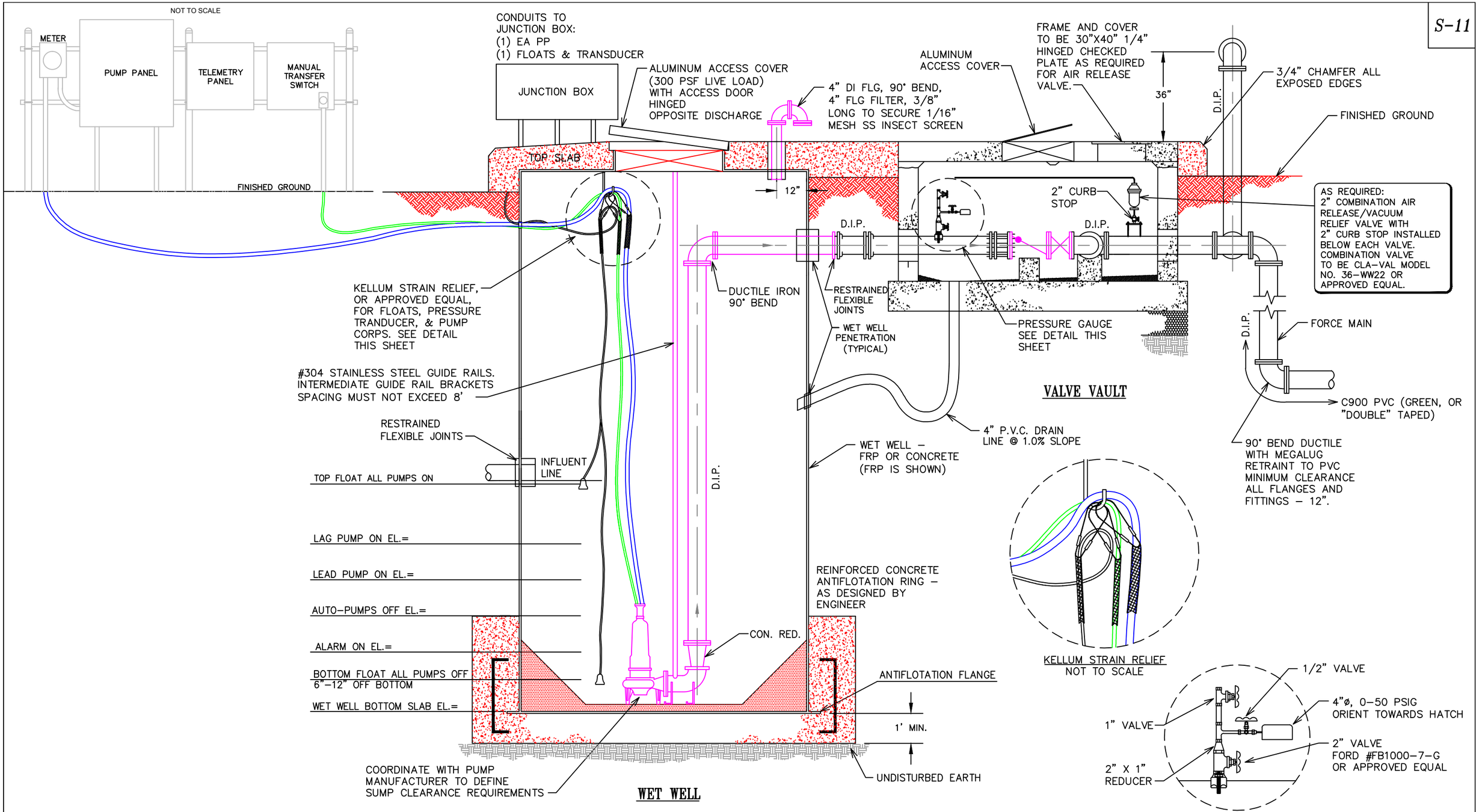

LIFT STATION – WET WELL & VALVE VAULT

SECTION VIEW
SCALE: 1" = 1'-0"

WACO

ENGINEERING SERVICES

REVISIONS

NO.	COMMENTS	BY	DATE
01	REMOVE SEAL	DG	09/03/2014

BOOK PAGE NUMBER 0000

DATE 09/03/2014

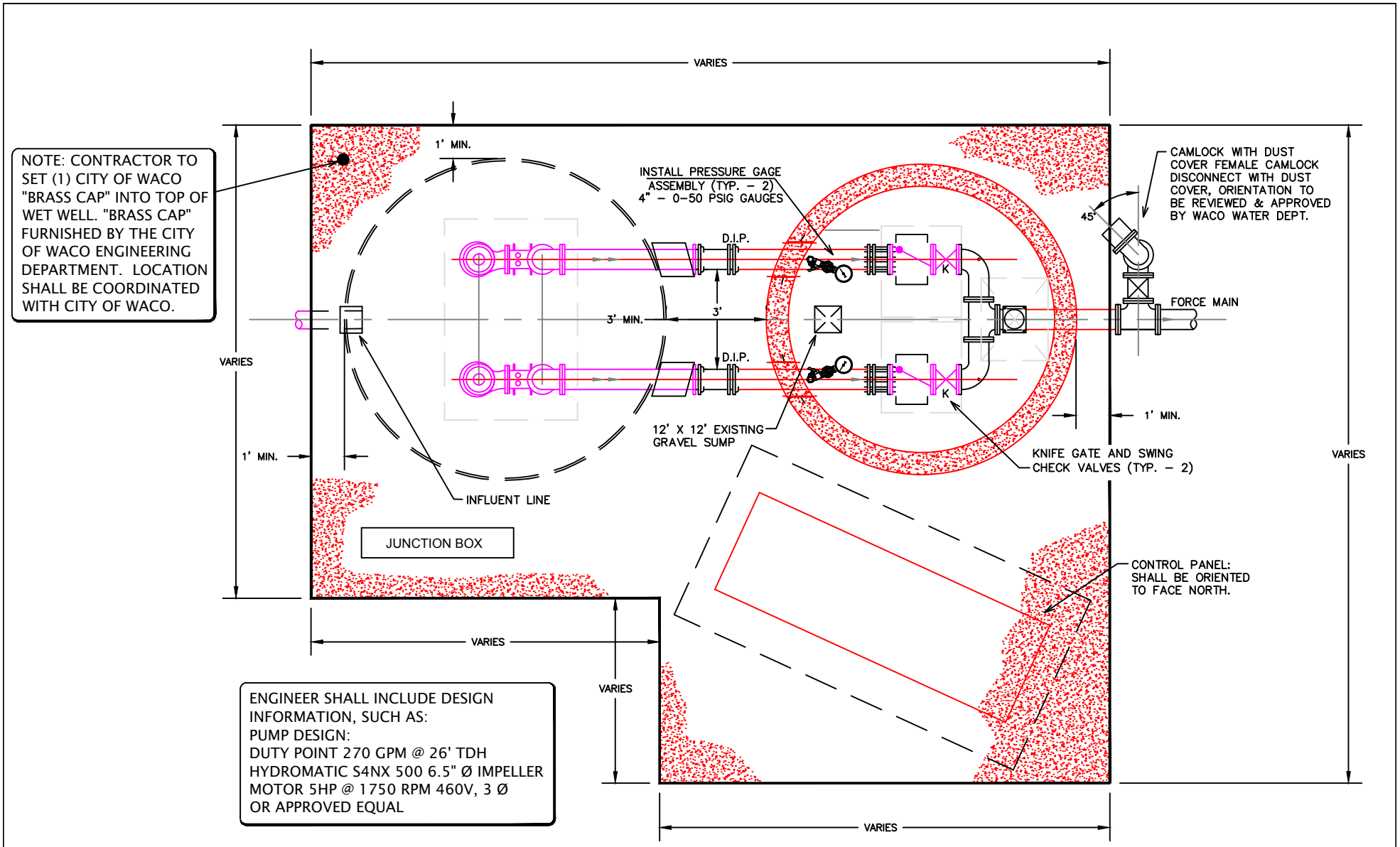

LIFT STATION – WET WELL & VALVE VAULT

PLAN VIEW

SCALE: 1/4" = 1'-0"

S-11A

WACO

ENGINEERING SERVICES

REVISIONS

NO.	COMMENTS	BY	DATE
01	REMOVE SEAL	DG	09/03/2014

BOOK PAGE NUMBER 0000

DATE 09/03/2014

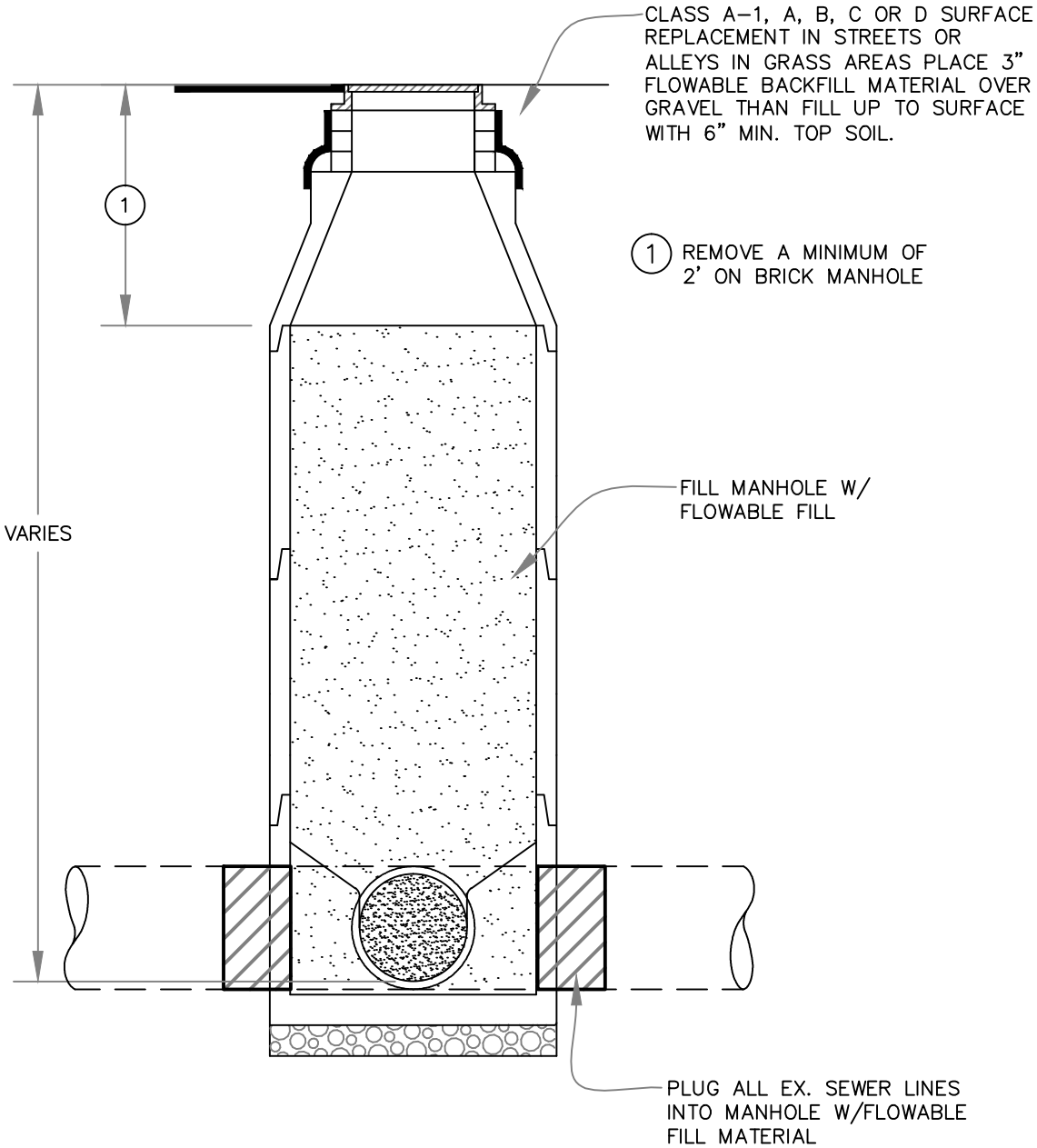

MANHOLE ABANDONMENT DETAIL

(N.T.S.)

WACO

ENGINEERING SERVICES

REVISIONS

NO.	COMMENTS	BY	DATE
02	REMOVE SEAL	DG	09/03/2014
01	ADD NOTE #1-BRICK MANHOLES	DG	02/01/2013

BOOK PAGE NUMBER 0000

DATE 09/03/2014

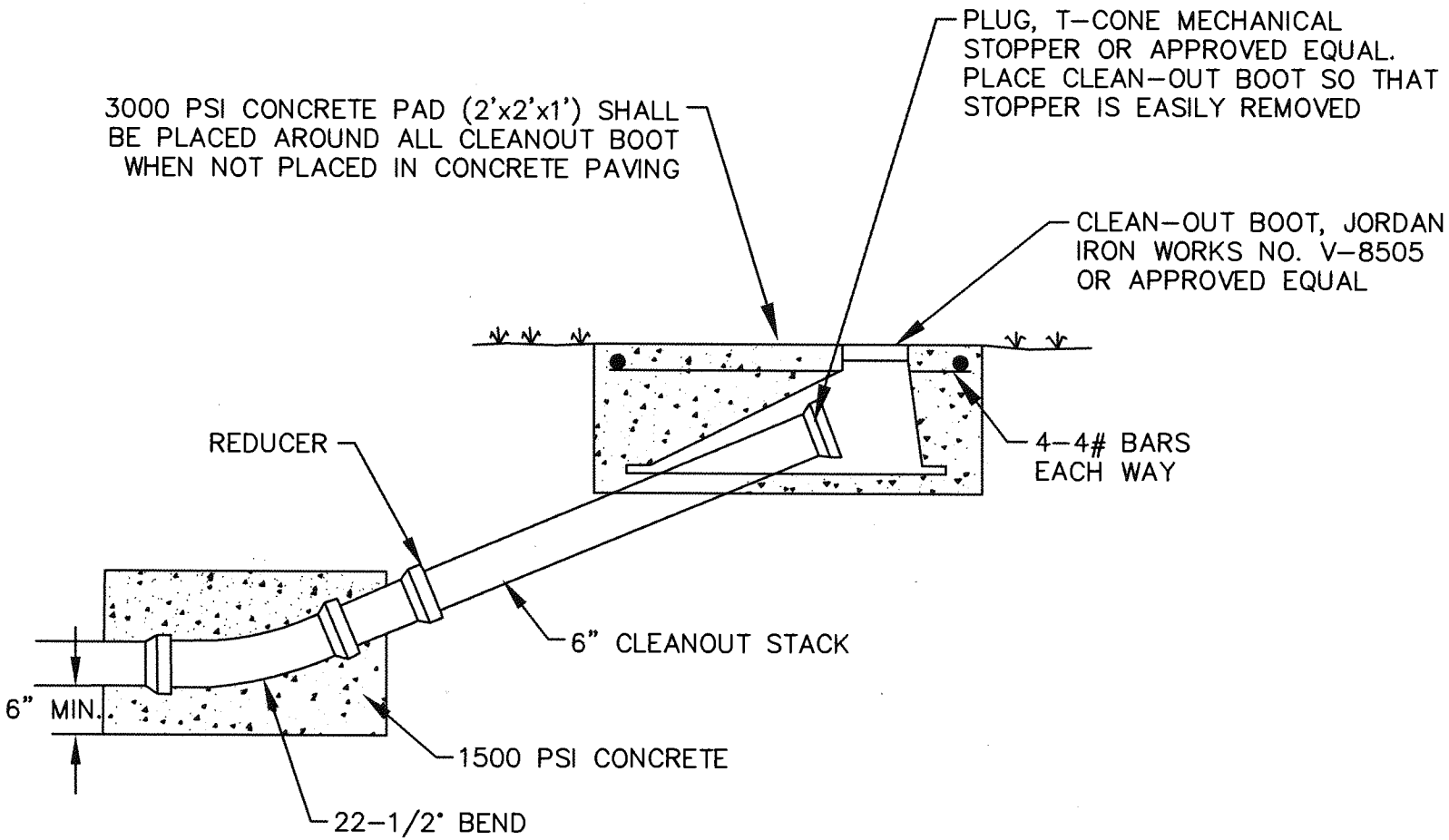

NOTE: EMBEDMENT FOR LATERALS AND ML CLEANOUTS TO BE THE SAME AS MAIN LINE.

END OF LINE SWEEPING CLEANOUT

N.T.S.

S-13

ENGINEERING SERVICES

CITY OF WACO

REVISIONS			
NO.	COMMENTS	BY	DATE

DATE

04/15/2015

CITY OF WACO

STREET DETAILS

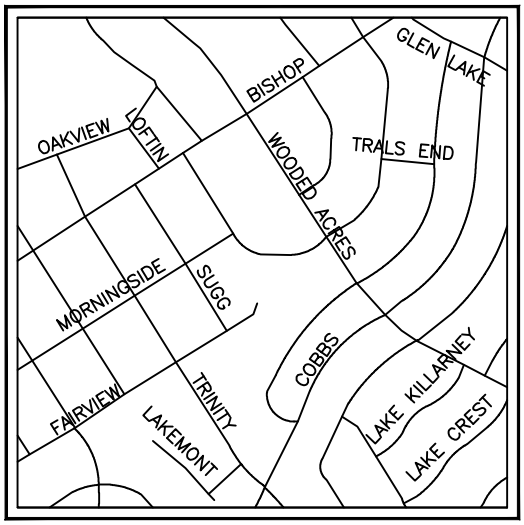

STREETS - GENERAL NOTES

GENERAL

1. ALL CONCRETE AND REINFORCEMENT MATERIALS AND PLACEMENT MUST COMPLY WITH SECTION 5.1 OF THE CITY OF WACO STANDARD SPECIFICATIONS FOR CONSTRUCTION.

2. PLEASE REFER TO CITY OF WACO MANUAL OF STANDARD DETAILS G-10 FOR GENERAL CONCRETE AND REINFORCEMENT NOTES.

STREETS

3. SAWED JOINTS MUST BE SAWED AS SOON AS CONCRETE CAN SUPPORT THE WEIGHT OF THE SAW.

4. A BURLAP DRAG FINISH IS SPECIFIED FOR CONCRETE PAVEMENT.

5. AT THE CONTRACTOR'S OPTION, EVERY OTHER LONGITUDINAL CONSTRUCTION JOINT MAY BE DELETED AND A SAWED JOINT OF THE SAME DETAIL AS THE TRANSVERSE JOINT USED IN IT'S PLACE.

6. TRANSVERSE CONSTRUCTION JOINTS SHALL BE OF THE SAME DETAIL AS LONGITUDINAL CONSTRUCTION JOINTS AND SHALL BE LOCATED AT A NORMAL JOINT LOCATION.

CURB AND GUTTER

7. CURB AND GUTTER FORMS NEED TO BE "TAPPED" TO MINIMIZE VOIDS. WITHIN 24 HOURS OF REMOVAL OF THE FORMS, ANY VOIDS SHALL BE PATCHED WITH PORTLAND CEMENT MORTAR.

8. CONSTRUCTION JOINTS WITH EXPANSION MATERIAL SHALL BE PLACED AT 50' INTERVALS, AND AT THE BEGINNING AND END OF ALL CURB RETURNS AND DRIVE APPROACHES.

9. TOOLED, CRACK CONTROL (DUMMY) JOINTS WILL BE CUT ON 10' SPACING. JOINTS WILL BE CUT AT LEAST HALFWAY THROUGH THE FACE, TOP, AND GUTTER.

10. CURB AND GUTTER SHALL CURE A MINIMUM OF 7 DAYS PRIOR TO INSTALLATION OF BASE COURSE, OR WITH THE PRIOR APPROVAL OF THE CITY ENGINEER, SHALL REACH A COMPRESSIVE STRENGTH OF 3000 PSI AS TESTED BY CYLINDER BREAK.

11. CURB AND GUTTER SHALL BE PLACED USING A MULE AND GOOSENECK. OR WITH THE PRIOR APPROVAL OF THE CITY ENGINEER, OTHER APPROVED EQUIVALENT MEANS TO PRODUCE A UNIFORM PRODUCT.

LIP OF GUTTER SHALL BE SAME ELEVATION
AS TOP OF SURFACE COURSE. IF BOTTOM
OF CURB DOESN'T EXTEND TO TOP OF SUBGRADE
FILL MUST BE ONE OF THE FOLLOWING:

① CONCRETE (EXTEND DEPTH OF CURB)
② 4" MINIMUM COMPACTED ROAD GRAVEL
③ 4" MINIMUM COMPACTED STABILIZED SUBGRADE MATERIAL

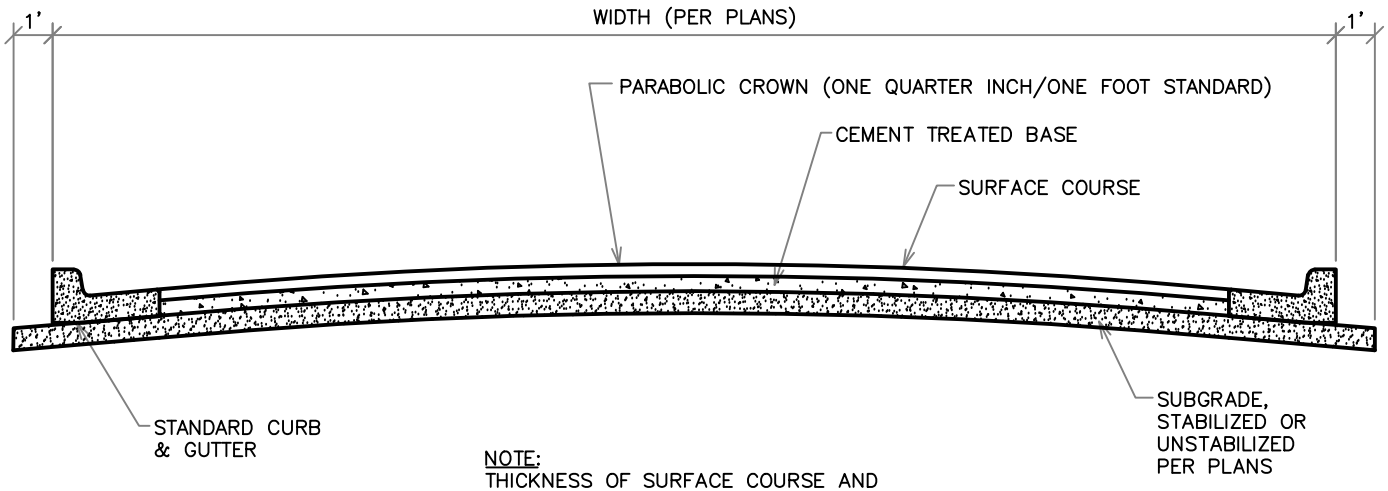

NOTE:
THICKNESS OF SURFACE COURSE AND
CEMENT TREATED BASE ARE AS PER PLANS
IF PI OF SUBGRADE IS MORE THAN 15,
THE SUBGRADE MUST BE STABILIZED.
STABILIZATION AGENT AND AMOUNT SHALL
BE DETERMINED BY GEOTECHNICAL TESTING
AND SHALL BE SPECIFIED ON PLANS.

STREET SECTION

ST-2

WACO

ENGINEERING SERVICES

REVISIONS

NO.	COMMENTS	BY	DATE
02	REMOVE SEAL	DG	09/03/2014
01	UPDATED	DG	10/01/2010

BOOK PAGE NUMBER 0000

DATE 09/03/2014

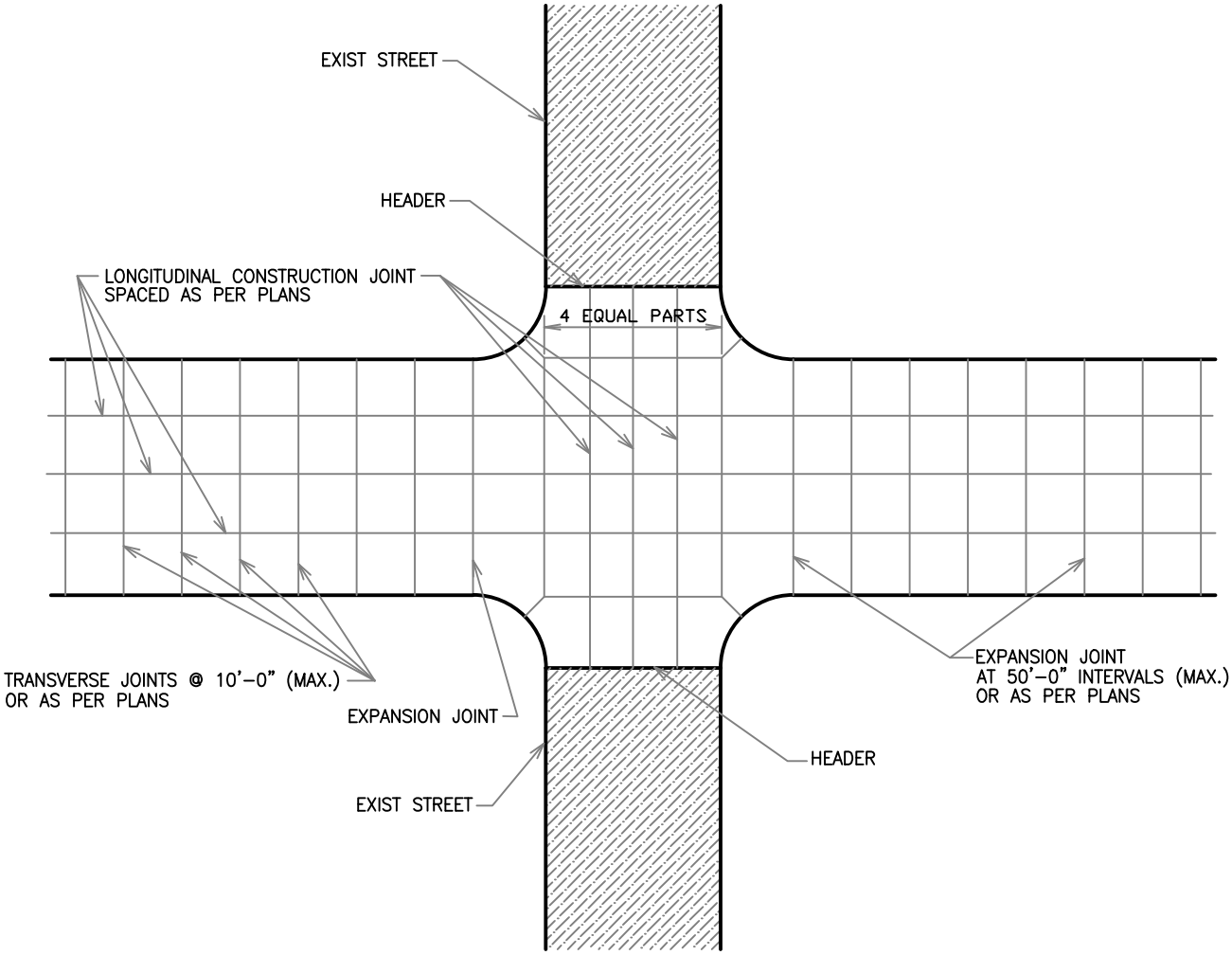

TYPICAL PLAN - CONCRETE PAVEMENT

WACO

ENGINEERING SERVICES

REVISIONS

NO.	COMMENTS	BY	DATE
02	REMOVE SEAL	DG	09/03/2014
01	UPDATED	DG	10/01/2010

BOOK PAGE NUMBER
0000

DATE
09/03/2014

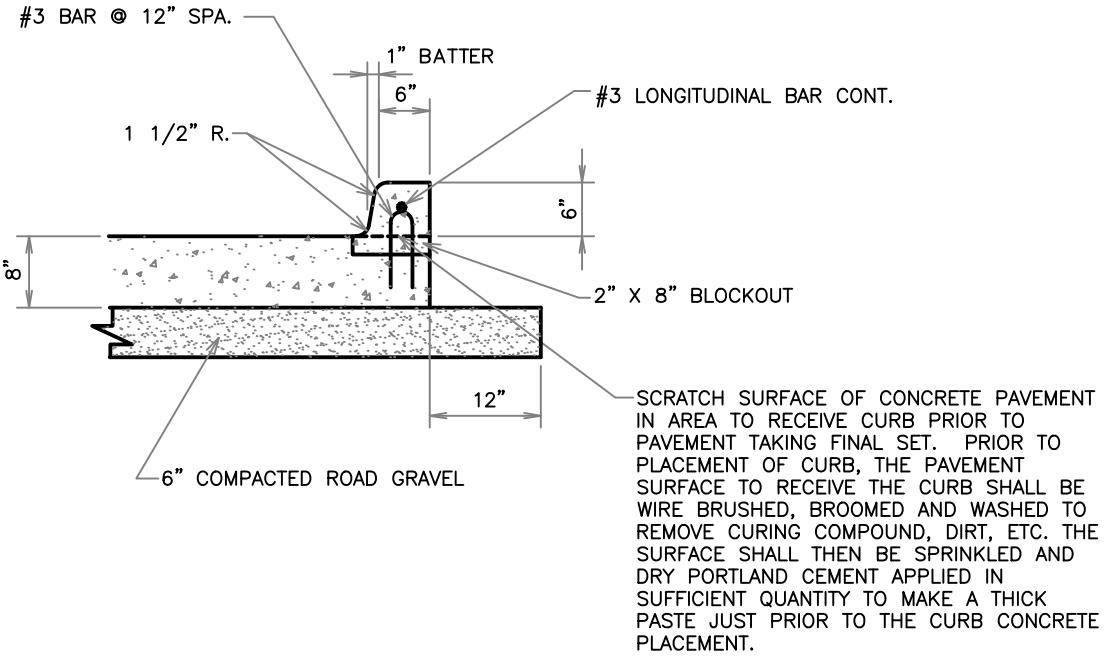

CURB MAY BE POURED MONOLITHICALLY WITH STANDUP PAVEMENT. IF SO THE #3 REBAR MAY BE DELETED.

CURB DETAILS FOR CONCRETE STREET

WACO

ENGINEERING SERVICES

REVISIONS

NO.	COMMENTS	BY	DATE
02	REMOVE SEAL	DG	09/03/2014
01	UPDATED	DG	10/01/2010

BOOK PAGE NUMBER 0000

DATE 09/03/2014

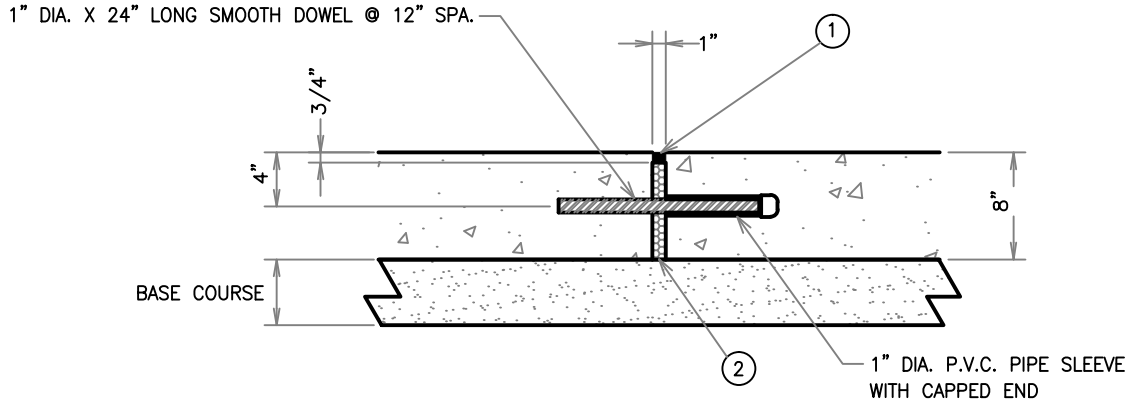

1. W. R. MEADOWS, SOF-SEAL, LOW MODULUS HORIZONTAL SEALANT, OR APPROVED EQUAL.
2. REDWOOD EXPANSION JOINT OR APPROVED EQUAL.

NOTES:
PAVEMENT REINFORCEMENT TO STOP 3" CLEAR OF JOINT FACES.

DOWEL BARS NEED TO BE LEVEL AND PERPENDICULAR TO THE FACE.

CONCRETE STREET EXPANSION JOINT DETAILS
SPACED AS PER PLANS

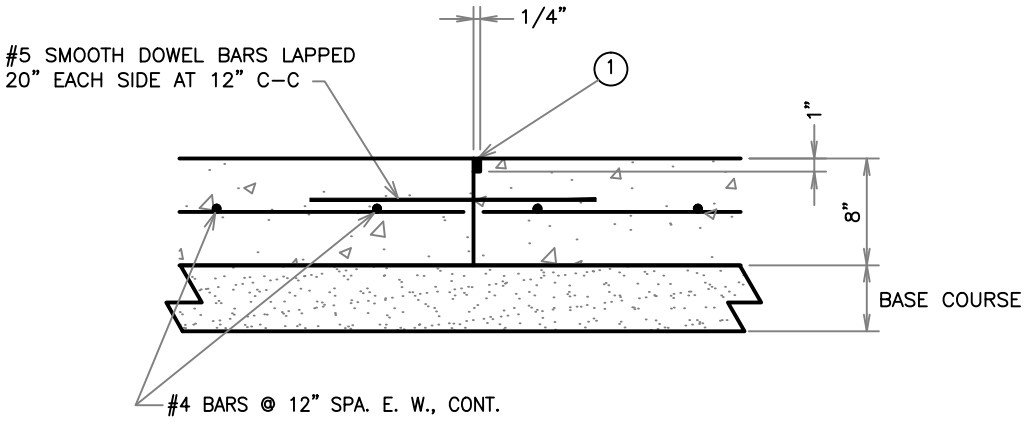

1. W. R. MEADOWS, SOF-SEAL, LOW MODULUS HORIZONTAL SEALANT, OR APPROVED EQUAL.

CONCRETE STREET LONGITUDINAL CONSTRUCTION JOINT

WACO

ENGINEERING SERVICES

REVISIONS

NO.	COMMENTS	BY	DATE
02	REMOVE SEAL	DG	09/03/2014
01	UPDATED	DG	10/01/2010

BOOK PAGE NUMBER 0000

DATE 09/03/2014

JOINT MUST BE SAWED AS SOON AS CONCRETE
CAN SUPPORT THE WEIGHT OF THE SAW.

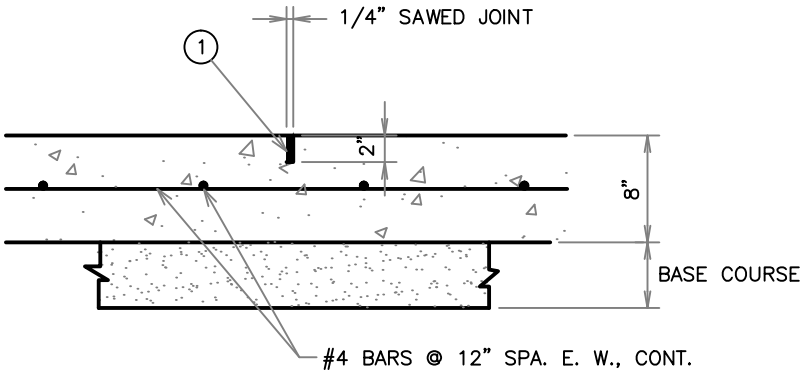

CONCRETE STREET TRANSVERSE JOINT

(1) W. R. MEADOWS, SOF-SEAL, LOW MODULUS
HORIZONTAL SEALANT, OR APPROVED EQUAL.

WACO

ENGINEERING
SERVICES

REVISIONS

NO.	COMMENTS	BY	DATE
02	REMOVE SEAL	DG	09/03/2014
01	UPDATED	DG	10/01/2010

BOOK PAGE NUMBER
0000

DATE
09/03/2014

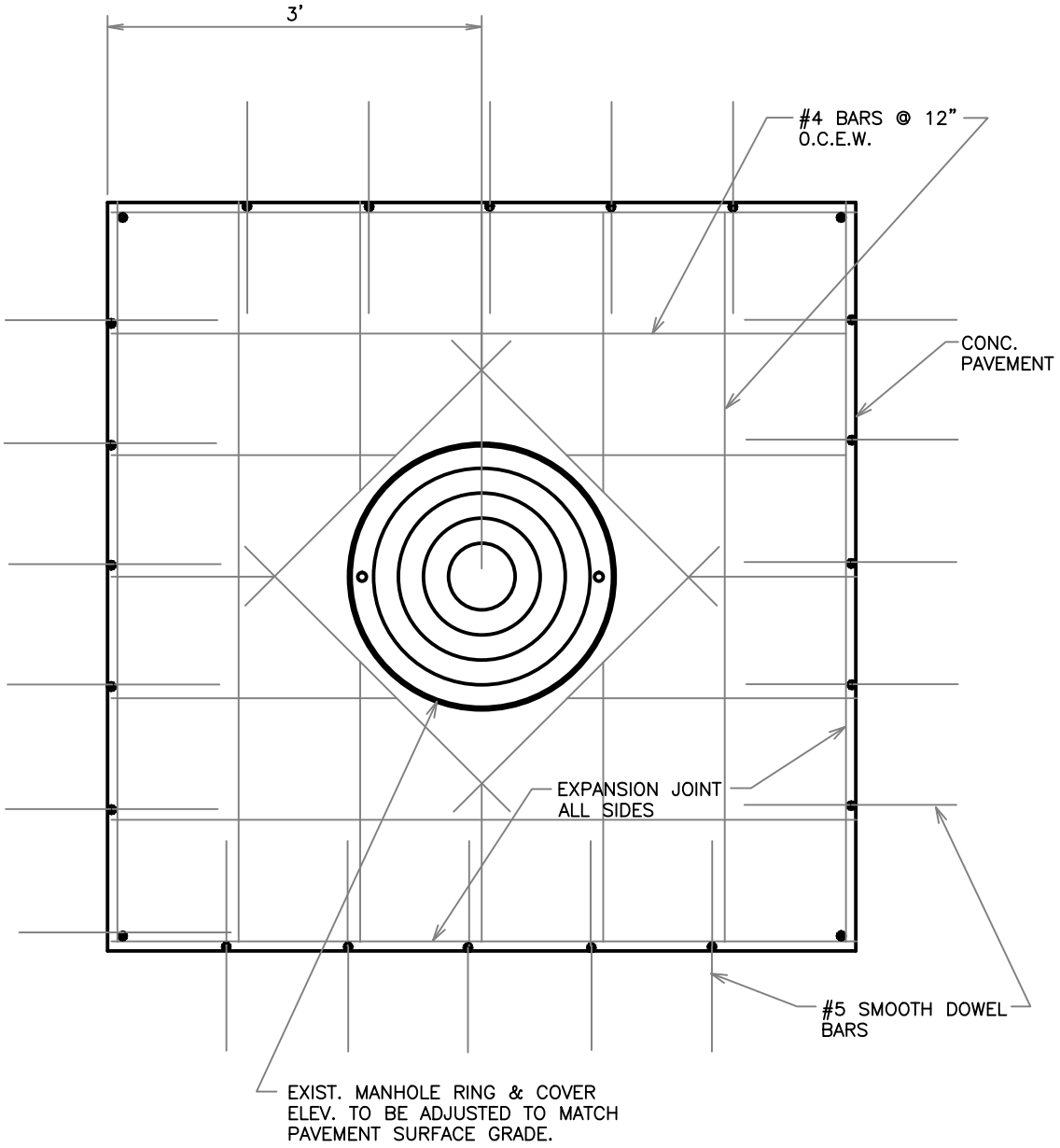

MANHOLE COVER & WATER VALVE COVER BLOCKOUT PLAN (CONCRETE STREETS ONLY)

WACO

ENGINEERING SERVICES

REVISIONS

NO.	COMMENTS	BY	DATE
02	REMOVE SEAL	DG	09/03/2014
01	UPDATED	DG	10/01/2010

BOOK PAGE NUMBER
0000

DATE
09/03/2014

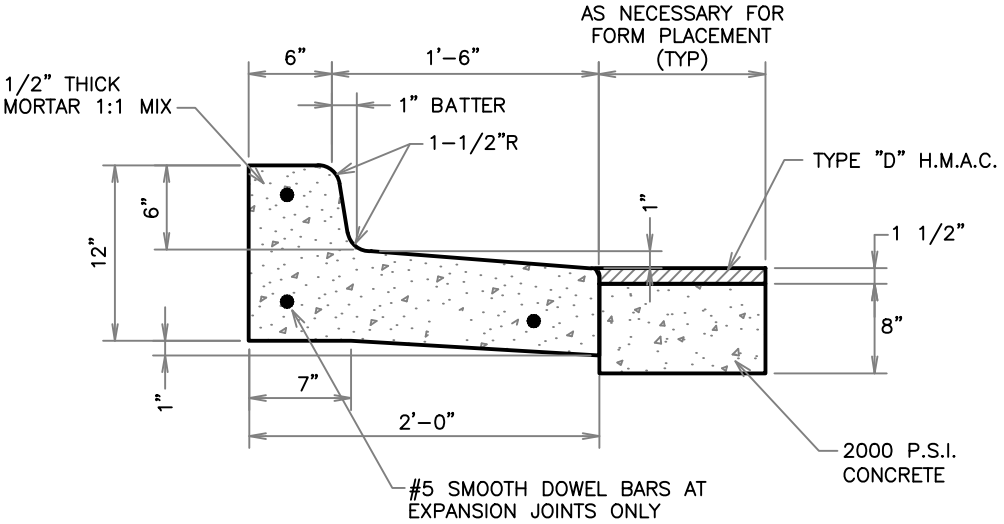

INDIRECT FLOW

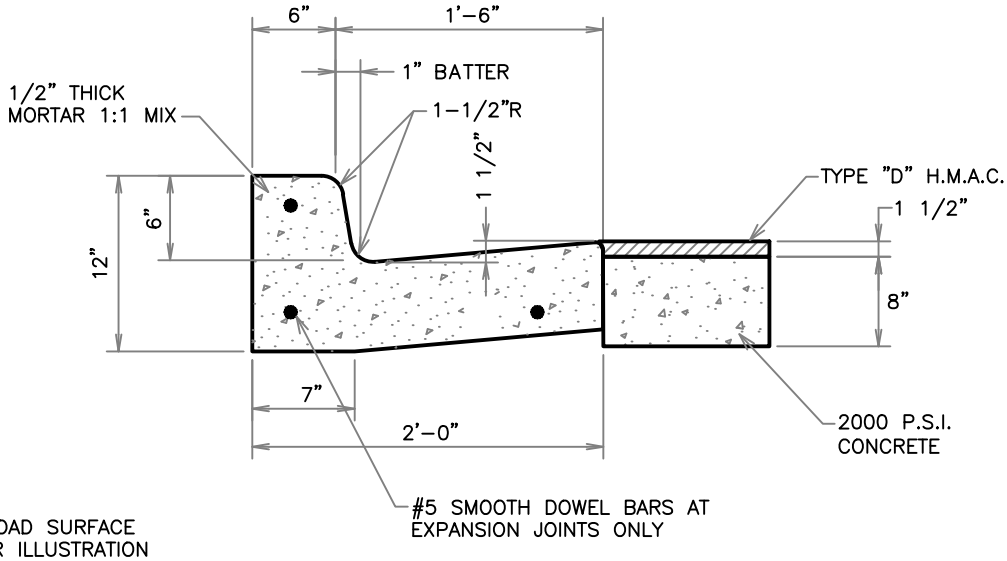

NOTE:
CLASS A ROAD SURFACE
SHOWN FOR ILLUSTRATION
PURPOSES ONLY.

DIRECT FLOW

STANDARD CURB & GUTTER

WACO

ENGINEERING
SERVICES

REVISIONS

NO.	COMMENTS	BY	DATE
02	REMOVE SEAL	DG	09/03/2014
01	UPDATED	DG	10/01/2010

BOOK PAGE NUMBER
0000

DATE
09/03/2014

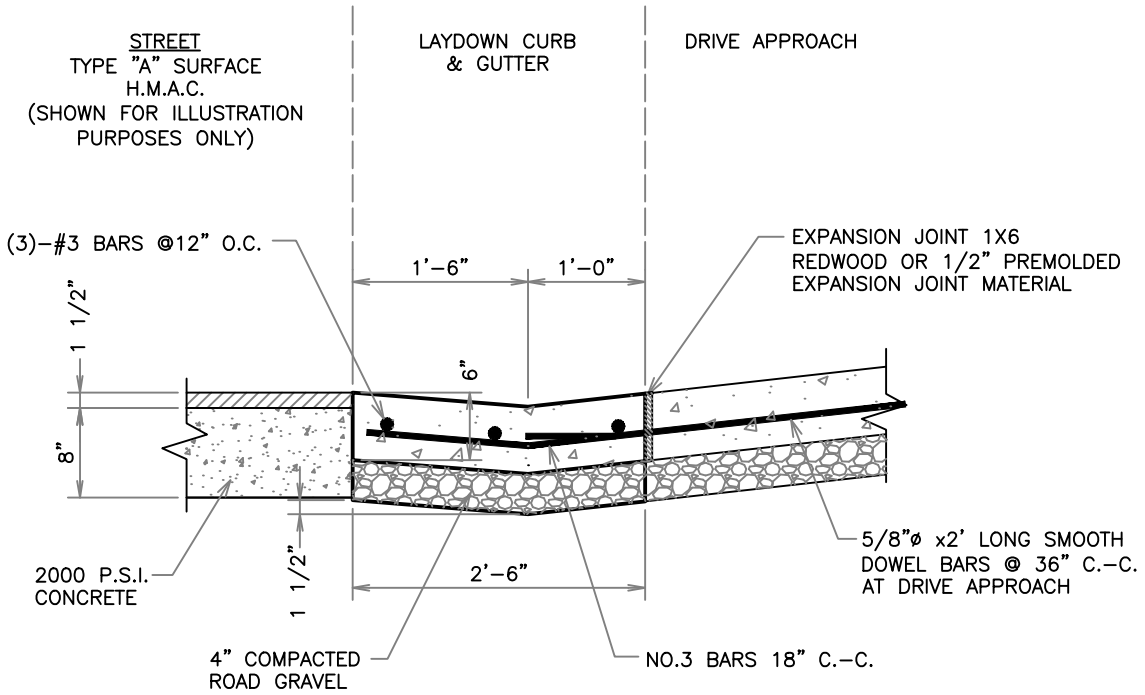

DIRECT FLOW
LAYDOWN CURB & GUTTER

WACO

ENGINEERING SERVICES

REVISIONS

NO.	COMMENTS	BY	DATE
03	REMOVE SEAL	DG	09/03/2014
02	UPDATED	DG	01/03/2012
01	UPDATED	DG	10/01/2010

BOOK PAGE NUMBER
0000

DATE
09/03/2014

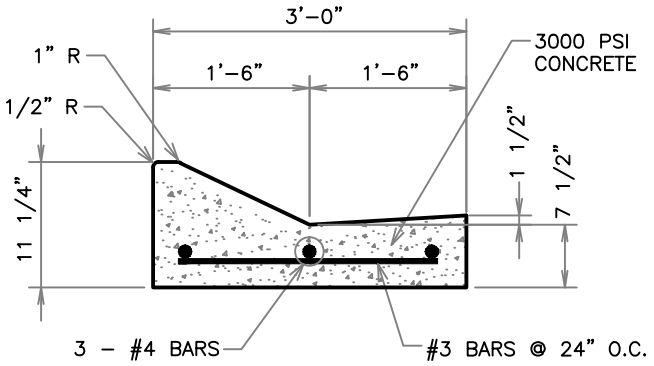

DIRECT FLOW

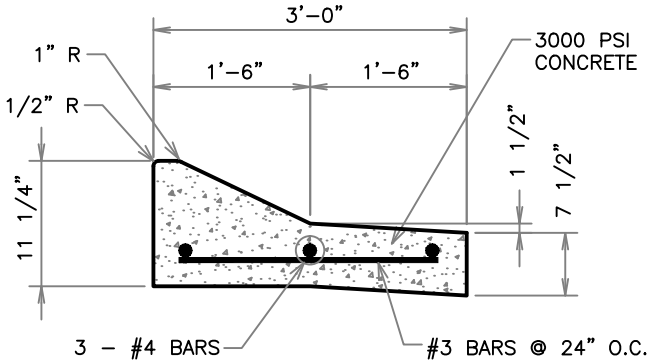

IN-DIRECT FLOW

NOTES:
MOUNTABLE CURB CAN ONLY BE USED UNDER THE FOLLOWING CIRCUMSTANCES:

1. SPEED LIMIT IS 30 MPH OR LESS
2. STREET LENGTH IS 300 FEET OR LESS
3. STREET CLASSIFICATION IS LOCAL STREET ONLY (NOT A COLLECTOR OR ARTERIAL)
4. LOT WIDTH IS NO MORE THAN 80 FEET

MOUNTABLE CURB

WACO

ENGINEERING SERVICES

REVISIONS

NO.	COMMENTS	BY	DATE
02	REMOVE SEAL	DG	09/03/2014
01	CHANGE DESIGN OF MOUNTABLE CURB DETAIL	DG	02/01/2013

BOOK PAGE NUMBER 0000

DATE 09/03/2014

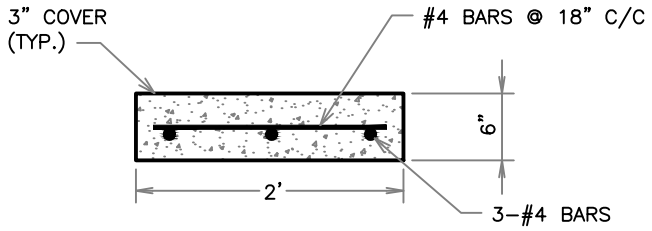

CRACK CONTROL (DUMMY) JOINTS
EVERY 10', CONSTRUCTION JOINT
W/EXPANSION BOARD EVERY 50'

RIBBON CURB

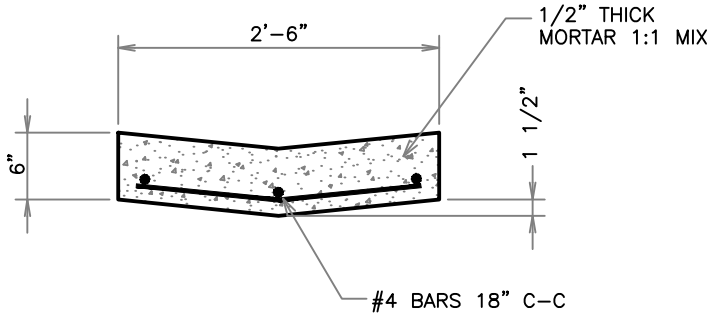

VALLEY CURB

NOTE:
THE CURBS SHOWN ON THIS DETAIL MAY ONLY BE USED WITH THE PERMISSION OF THE CITY OF WACO ENGINEERING DEPARTMENT.

RIBBON & VALLEY CURB DETAILS

WACO

ENGINEERING SERVICES

REVISIONS

NO.	COMMENTS	BY	DATE
2	REMOVE SEAL	DAG	09/03/2014
1	RIBBON & VALLEY CURB FROM #3 BARS TO #4 BARS	DAG	11/18/2013

BOOK PAGE NUMBER
0000

DATE
09/03/2014

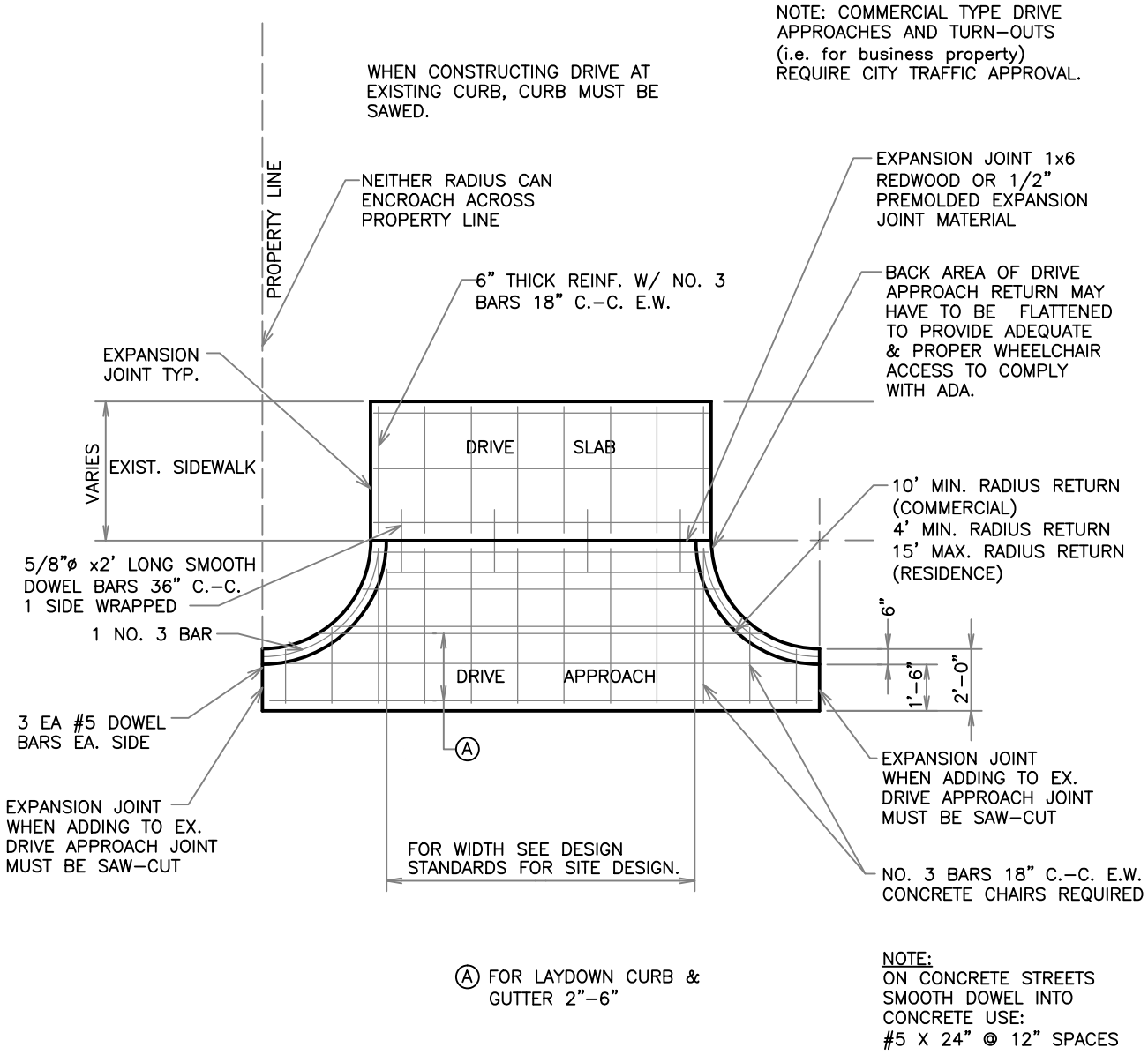

STANDARD DRIVE APPROACH

WACO

ENGINEERING SERVICES

REVISIONS

NO.	COMMENTS	BY	DATE
03	REMOVE SEAL	DG	09/03/2014
02	UPDATED	DG	01/05/2012
01	UPDATED	DG	10/01/2010

BOOK PAGE NUMBER 0000

DATE 09/03/2014

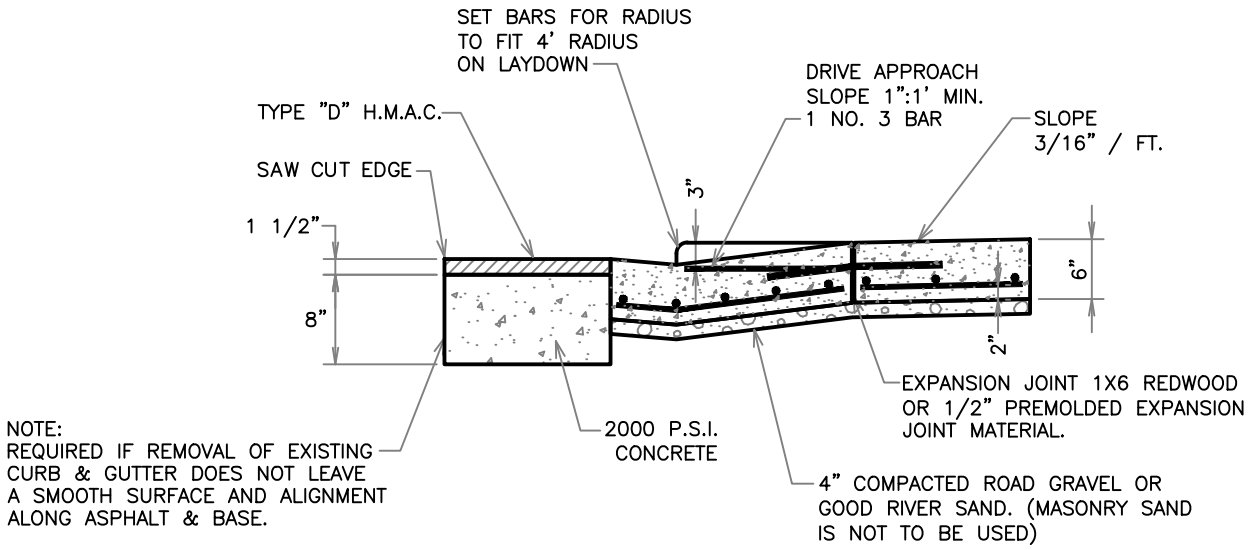

STREET TIE-IN

NEW DRIVE APPROACH ON EXISTING ASPHALT STREET

NOTE:

1. CURB & GUTTER TO BE PAID FOR SEPARATELY FROM CONCRETE VALLEY AT THE CONTRACTOR UNIT PRICE FOR CURB & GUTTER.
2. IF CURB RETURNS ARE NOT EXISTING VALLEY AND RETURNS SHALL BE MONOLITHIC WHEN C. & G. IS CALLED FOR.
3. UPSTREAM RETURN IN VALLEY SHALL BE CONSTRUCTED SO WATER WILL NOT POND.
4. VALLEY MAY BE PLACED IN TWO 1/2 SECTIONS.

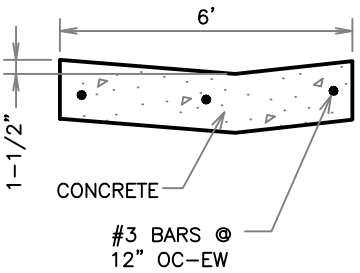

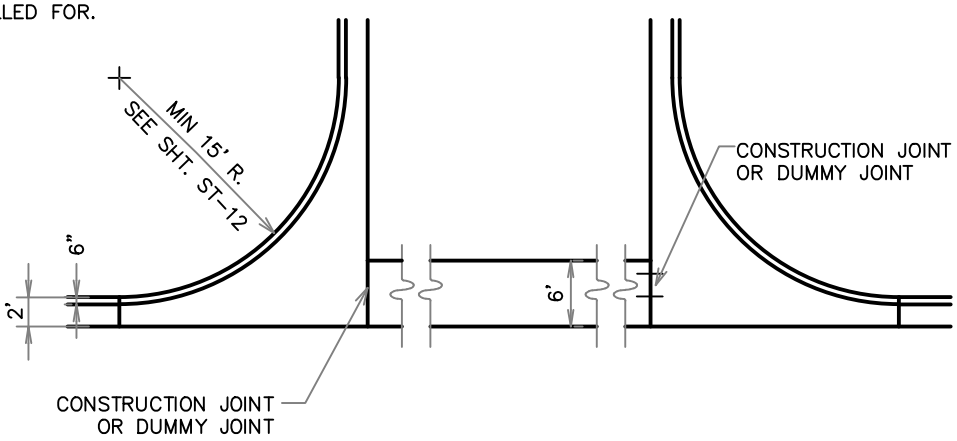

STANDARD VALLEY

WACO

ENGINEERING SERVICES

REVISIONS

NO.	COMMENTS	BY	DATE
02	REMOVE SEAL	DG	09/03/2014
01	UPDATED	DG	10/01/2010

BOOK PAGE NUMBER 0000

DATE 09/03/2014

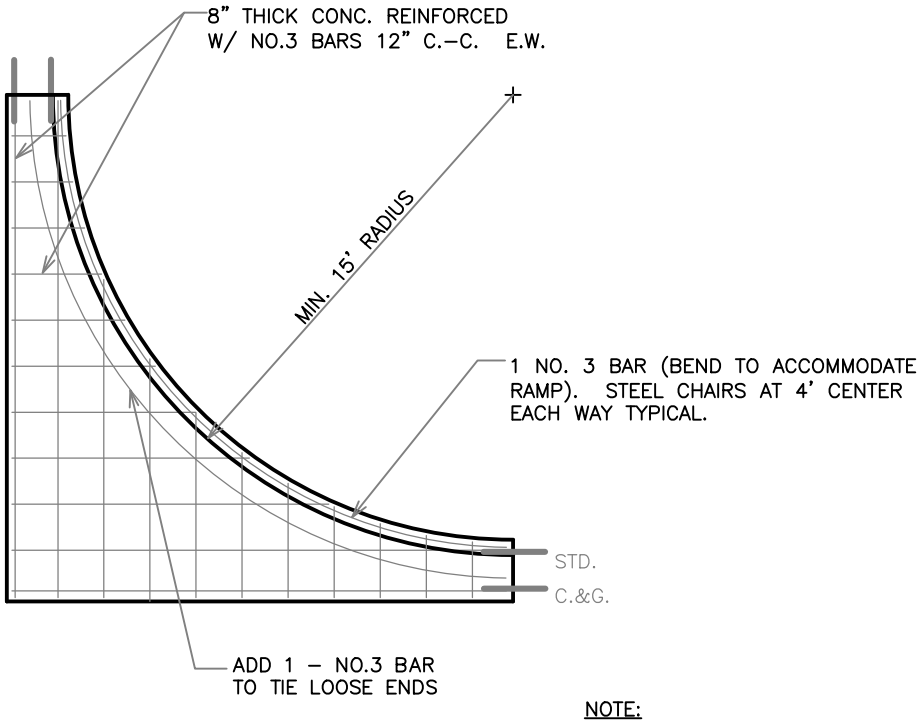

NOTE:
CURB RETURN & FILLET
SHALL BE MONOLITHIC

CONCRETE CURB & GUTTER FILLET

WACO

ENGINEERING SERVICES

REVISIONS

NO.	COMMENTS	BY	DATE
02	REMOVE SEAL	DG	09/03/2014
01	UPDATED	DG	10/01/2010

BOOK PAGE NUMBER
0000

DATE
09/03/2014

GENERAL NOTES-METAL BEAM GUARD FENCE

1. THE EXACT POSITION OF GUARD FENCE SHALL BE AS SHOWN ELSEWHERE ON THE PLANS OR AS DIRECTED BY THE ENGINEER. GUARD FENCE SHALL BE TRANSITIONED TO A SMOOTH CONNECTION WITH OTHER GUARD FENCE OR STRUCTURE RAILING AS SHOWN ELSEWHERE ON PLANS.
2. UNLESS OTHERWISE SHOWN IN THE PLANS, A GUARD FENCE PLACED IN THE VICINITY OF CURBS SHALL BE BLOCKED OUT SO THAT THE FACE OF THE CURB IS LOCATED DIRECTLY BELOW OR BEHIND THE FACE OF RAIL. RAILS PLACED OVER CURBS SHALL BE INSTALLED SO THAT THE POST BOLT IS LOCATED APPROXIMATELY 21" ABOVE THE GUTTER PAN OR ROADWAY SURFACE.
3. UNLESS OTHERWISE SHOWN IN THE PLANS, MBGF SHALL BE PLACED WITH THE FACE OF RAIL 1'-0" BEHIND THE EDGE OF ROAD OR BACK OF CURB EXCEPT THE 20' TERMINAL ANCHOR SECTION AND ADJACENT 25' OR MBGF SHALL BE FLARED AT 25' I (LONGITUDINAL LATERAL) TO PROVIDE A 3' OFFSET BETWEEN BURIED ANCHOR & SHOULDER EDGE FLARING THE 25' TERMINAL ANCHOR & ADJACENT 25' MBGF IS OPTIONAL FOR ONE-WAY TRAFFIC CONDITIONS ON THE DOWNSTREAM END OF GUARD FENCE.
4. AT THE OPTION OF THE CONTRACTOR, THE RAIL ELEMENTS FOR THE GUARD FENCE MAY BE FURNISHED IN EITHER 12 1/2' OR 25' NOMINAL LENGTHS WITH POST BOLT SLOTS FOR CONNECTION TO POSTS.
5. TIMBER POSTS MAY BE BEVELED FROM 10° TO 15° ON THE TOP OF BOTH ENDS WITH HIGH SIDE OF TOP OF POST PLACED TOWARD THE ROADWAY OR THEY MAY BE DOMED. WHEN BLOCKOUT GUARD FENCE IS SPECIFIED ELSEWHERE IN THE PLANS, A 6" X 6" X 14" TREATED TIMBER SPACER OF YELLOW PINE SHALL BE USED WITH WOOD POSTS. WHEN "BLOCKED OUT" THE UPPER PORTION OF THE POSTS SHALL BE NOTCHED 3/4" TO PROVIDE FLAT SURFACE FOR TIMBER SPACER. A TOLERANCE OF ±1/8" WILL BE PERMITTED OF THE NOTCHED PORTION OF THE POST. ROUTING THE TIMBER SPACER MAY BE USED IN LIEU OF NOTCHING THE POST. THE DEPTH OF ROUTING SHALL BE 3/4" AT THE CENTER OF RADIUS ±1/8".
6. STEEL POSTS SHALL BE LOCKED OUT. STEEL POSTS & SPACERS SHALL MEET THE REQUIREMENTS OF ASTM A-36 (W6 X 9.0 OR W6 X 8.5). BOLT HOLES SHALL BE APPROXIMATELY CENTERED BETWEEN WEB END EDGE OF FLANGE OF SPACERS & POSTS.
7. POST SPACING WILL BE 6'-3" EXCEPT THAT THE FIRST POST WILL BE 25' FROM THE TERMINAL ANCHOR POST & THE NEXT TWO POSTS SPACED AT 12'-6" WITH A MINIMUM OF 8 POSTS ADJACENT TO STRUCTURES SPACED AT 3'-1 1/2" AND POSTS ADJACENT TO TYPE T6 BRIDGE RAIL ARE SPACED AT 6'-3". POST SPACING ADJACENT TO STRUCTURES MAY VARY AS SHOWN ON BRIDGE RAIL DETAILS OR AS DIRECTED BY THE ENGINEER.
8. THE UPPER 10" (MINIMUM) OF THE TERMINAL ANCHOR POST & ALL STEEL FITTINGS THEREON SHALL BE GALVANIZED.
9. THE TERMINAL ANCHOR POSTS SHALL BE SET IN CLASS "A" CONCRETE (UNLESS OTHERWISE SHOWN ON PLANS) IN ACCORDANCE WITH ITEM, "PORTLAND CEMENT CONCRETE". CONCRETE SHALL BE SUBSIDIARY TO THE BID ITEM REQUIRING CONSTRUCTION OF THE TERMINAL RAIL SECTION & ANCHORAGE SYSTEM.
10. AN ANCHOR OTHER THAN TO A TERMINAL ANCHOR POST SHALL CONSIST OF A CONNECTION SIMILAR TO THE RAIL SPLICE OR SIMILAR TO THE TERMINAL CONNECTOR.
11. BACK-UP PLATES SHALL BE PROVIDED AT INTERMEDIATE (NON-SPLICE) STEEL POSTS. BACK-UP PLATES SHALL CONFORM TO THE MATERIALS & GALVANIZING REQUIREMENTS SPECIFIED FOR THE RAIL ELEMENT, & SHALL BE OF THE SAME NOMINAL THICKNESS AS THE RAIL ELEMENT USED.
12. WASHERS USED WITH THE EIGHT 5/8" SPLICE BOLTS & NUTS THAT ARE PROVIDED FOR TERMINAL CONNECTORS AND/OR TERMINAL ANCHOR POSTS SHALL BE 1 3/4" X 3" X 3/16" OR 1" I.D. AND 2" O.D. X 0.134 (ANSI B27.2) NARROW TYPE "A" PLAIN WASHERS.
13. THE 10 GAUGE TERMINAL CONNECTORS MUST BE USED WITH THE OPTIONAL TERMINAL ANCHOR POST. EITHER ANCHOR POST MAY BE USED WITH EITHER CONCRETE ANCHOR.
14. WELDED STEEL POSTS & SPACERS SHALL MEET THE REQUIREMENTS OF ASTM A-36. THE FLANGE WIDTH & THICKNESS, WEB THICKNESS, & DEPTH OF WELDED POSTS & SPACERS SHALL EQUAL OR EXCEED THE DIMENSIONS OF A STANDARD ROLLED W6 X 8.5 X OR W6 X 9.0.
15. SPECIAL FABRICATION WILL BE REQUIRED AT INSTALLATIONS HAVING A CURVATURE OF LESS THAN 150' RADIUS.
16. BOLTS SHALL BE OF SUFFICIENT LENGTH TO EXTEND THROUGH THE FULL THICKNESS OF THE NUT & NO MORE THAN 3/4" BEYOND IT. (BUTTON HEAD BOLTS MAY BE USED INSTEAD OF HEX BOLTS WHEN SPECIFIED BY THE ENGINEER). FITTINGS (BOLTS, NUTS, & WASHERS) SHALL BE IN ACCORDANCE WITH ITEM, METAL FOR STRUCTURES. FITTINGS SHALL BE SUBSIDIARY TO THE BID ITEM REQUIRING CONSTRUCTION OF MBGF OR TERMINAL ANCHOR SECTION.
17. CROWN WILL BE WIDENED TO ACCOMMODATE GUARD FENCE.
18. WHERE SOLID ROCK IS ENCOUNTERED OR WHERE SHOWN ON THE PLANS, THE DIAMETER OF THE HOLES SHALL BE APPROXIMATELY 12". THE BACKFILLING SHALL BE WITH A COHESIONLESS MATERIAL, & EMBEDMENT DEPTH SHALL BE 1'-6" OR MORE AS DIRECTED BY THE ENGINEER. TIMBER POSTS SHALL NOT BE SET IN CONCRETE.

✱✱ POST SPACING OF 6'–3" MAY BE USED ON THE DOWN STREAM (FROM A TRAFFIC FLOW STANDPOINT) END OF MBGF PLACED ON ROADWAYS WITH ONE–WAY TRAFFIC OPERATIONS.

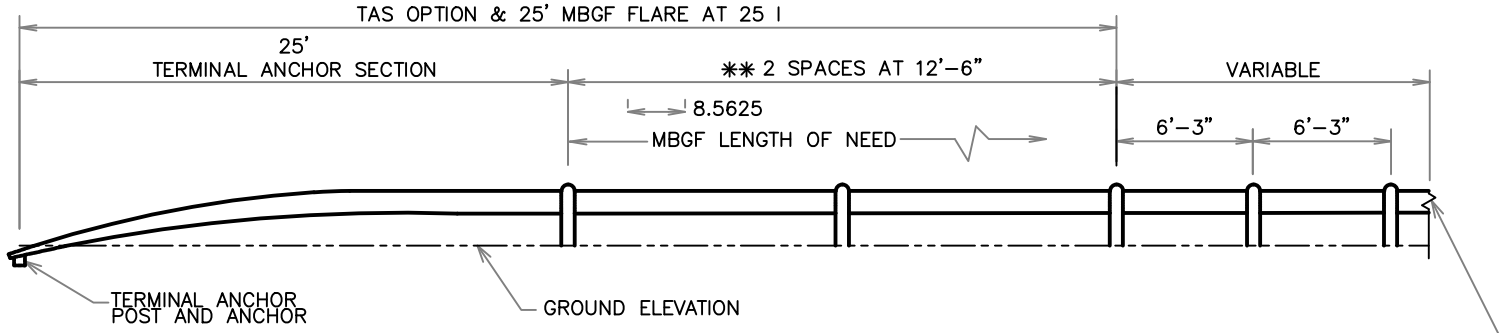

CONNECT TO TERMINAL ANCHOR, CONCRETE TRAFFIC BARRIER, WINGWALL, BRIDGE RAIL, OR APPROVED END TREATMENT AS SHOWN IN THE PLANS. LAP END SHOE IN ACCORDANCE WITH DIRECTION OF TRAFFIC.

ELEVATION

NOTE (1)

WHERE A NOMINAL LENGTH OF 6'–0" IS SPECIFIED AS ACCEPTABLE ELSEWHERE IN THE PLANS, THESE DIMENSIONS SHALL BE INCREASED BY 0'6". THE ADDITIONAL LENGTH SHOULD BE SPECIFIED ONLY ON ROADWAYS WHERE FUTURE ACP OVERLAYS AND ADJUSTMENTS OF THE RAIL HEIGHT ON THE SAME POSTS ARE LIKELY.

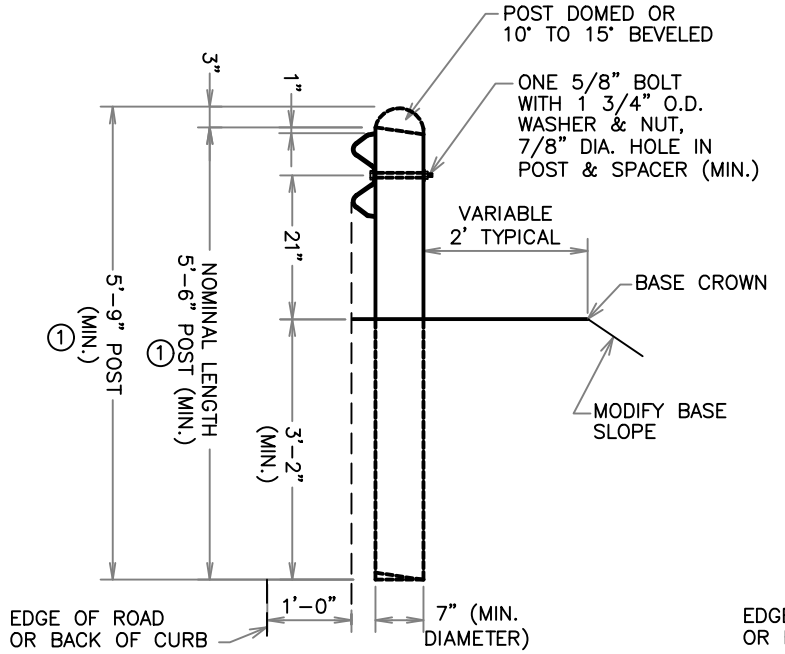

WOOD POST

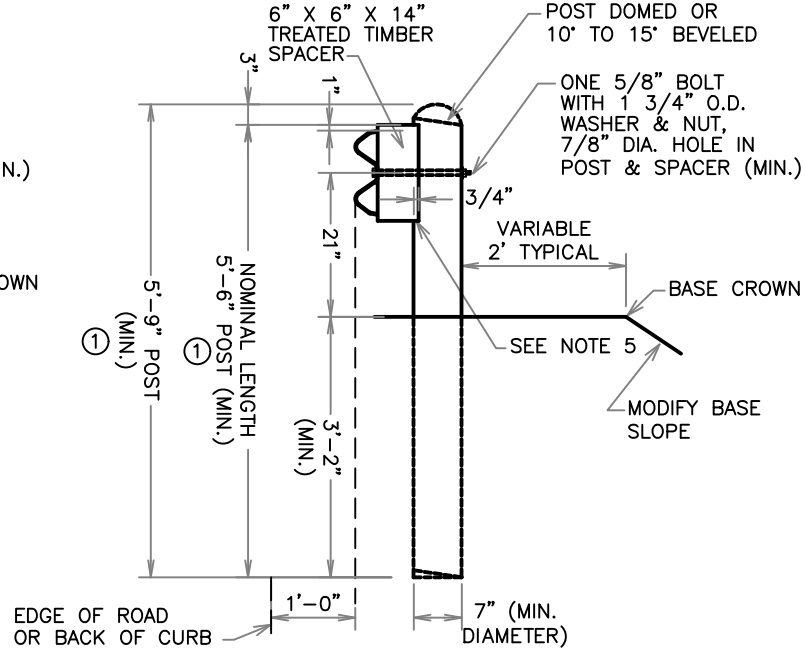

WOOD POST (BLOCKOUT)

STANDARD GUARDRAIL

ST–14

ENGINEERING SERVICES

WACO

NO.	COMMENTS	BY	DATE
02	REMOVE SEAL	DG	09/03/2014
01	UPDATED	DG	01/10/2011

REVISIONS

BOOK PAGE NUMBER 0000

DATE 09/03/2014

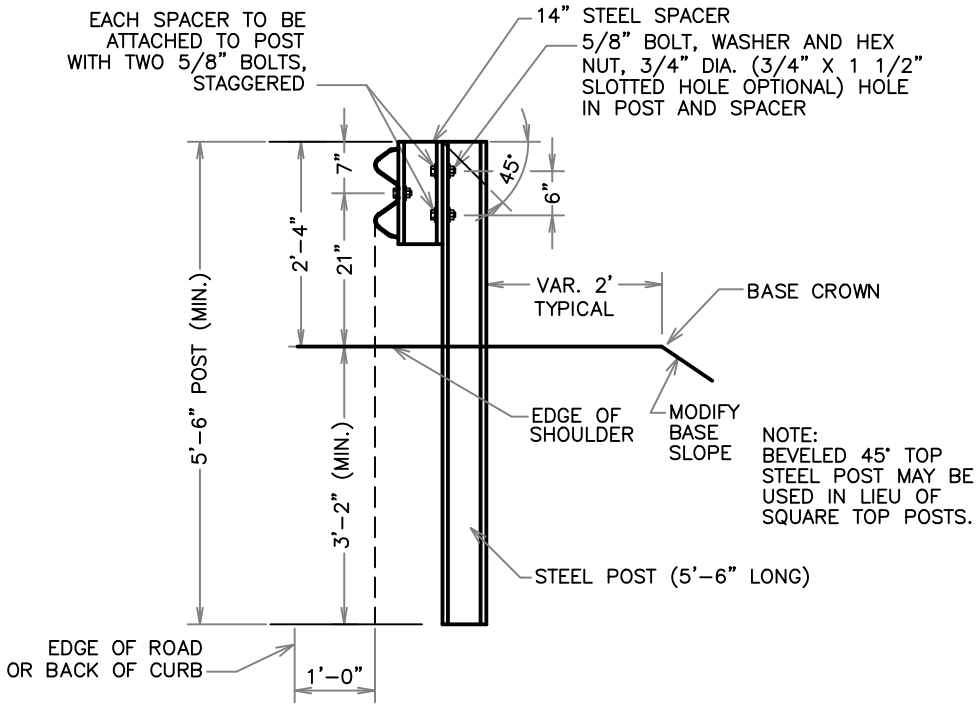

STEEL POST
(BLOCKOUT)

WACO

ENGINEERING SERVICES

REVISIONS

NO.	COMMENTS	BY	DATE
02	REMOVE SEAL	DG	09/03/2014
01	UPDATED	DG	01/10/2011

BOOK PAGE NUMBER
0000

DATE
09/03/2014

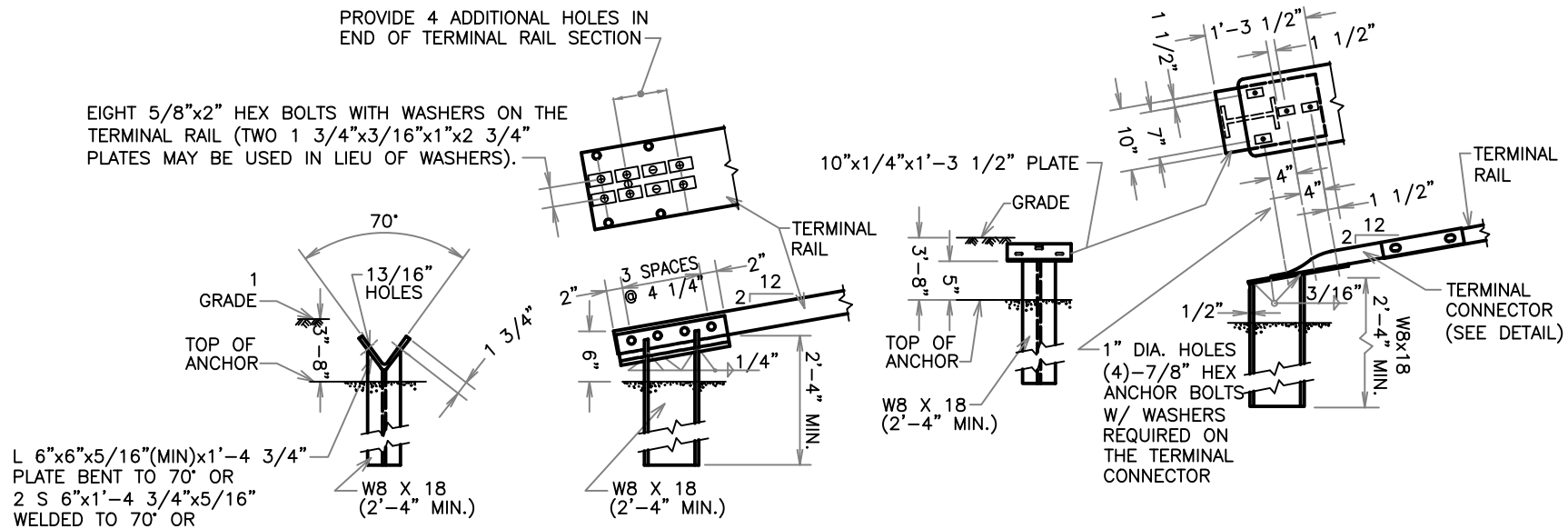

NOTE:
THIS POST REQUIRES FOUR ADDITIONAL HOLES (SHOP OR FIELD) IN THE TERMINAL RAIL MEMBER WITH EIGHT 5/8" BOLTS AND WASHER PLATES AS SHOWN FOR ATTACHMENT.

NOTE:
THIS OPTIONAL POST REQUIRES THE USE OF THE 10 GA. THE 10 GA. TERMINAL CONNECTOR WITH FOUR 7/8" HEX BOLTS FOR ATTACHMENT TO THE ANCHOR POST.

TERMINAL ANCHOR POST OPTIONS

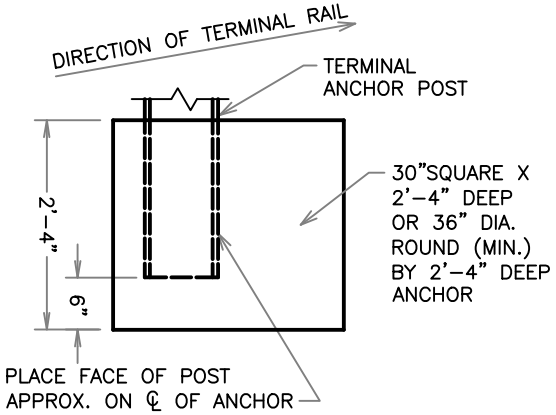

NOTES:

EITHER POST MAY BE USED WITH EITHER ANCHOR.

NO CONSTRUCTION JOINT IS ALLOWED IN THE CONCRETE ANCHOR.

TERMINAL RAIL MAY BE BOLTED TO POST AND IN TWIST POSITION PRIOR TO PLACING CONCRETE ANCHOR.

IF CONCRETE ANCHOR IS PRECAST, THE AREA SHOULD BE COMPACTED AS DIRECTED BY THE ENGINEER, WHEN PLACED IN THE FIELD.

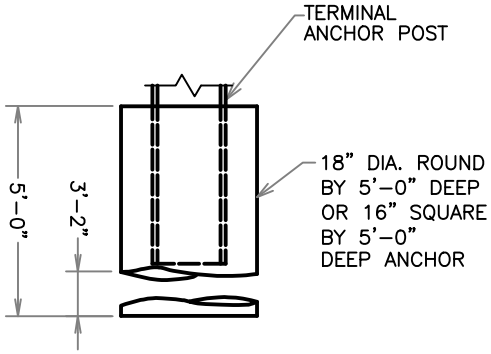

TERMINAL CONCRETE ANCHOR OPTIONS

WACO ENGINEERING SERVICES

REVISIONS

NO.	COMMENTS	BY	DATE
02	REMOVE SEAL	DG	09/03/2014
01	UPDATED	DG	01/10/2011

BOOK, PAGE NUMBER 0000

DATE 09/03/2014

ST-16

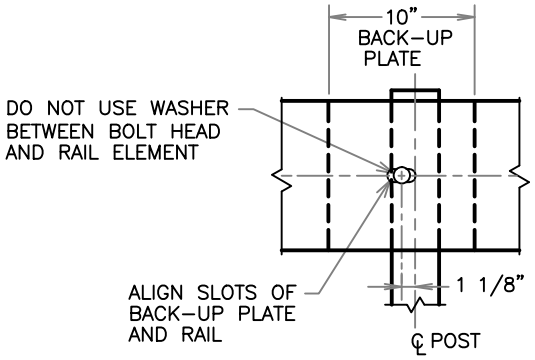

POST CONNECTION

STEEL POST

NON-SPLICE STEEL POST ONLY

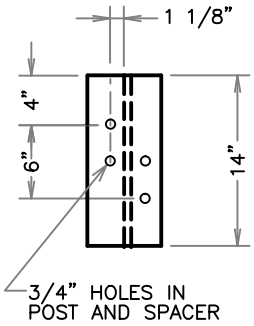

SPACER

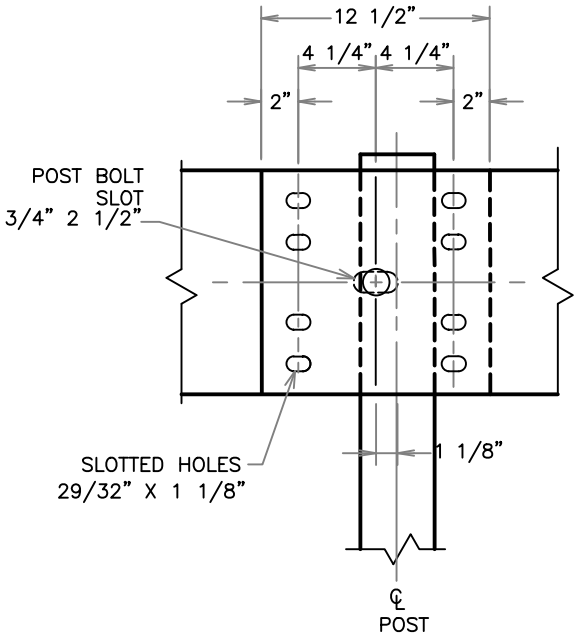

DIRECTION OF TRAFFIC

RAIL SPLICE

WACO

ENGINEERING SERVICES

REVISIONS

NO.	COMMENTS	BY	DATE
02	REMOVE SEAL	DG	09/03/2014
01	UPDATED	DG	01/10/2011

BOOK PAGE NUMBER 0000

DATE 09/03/2014

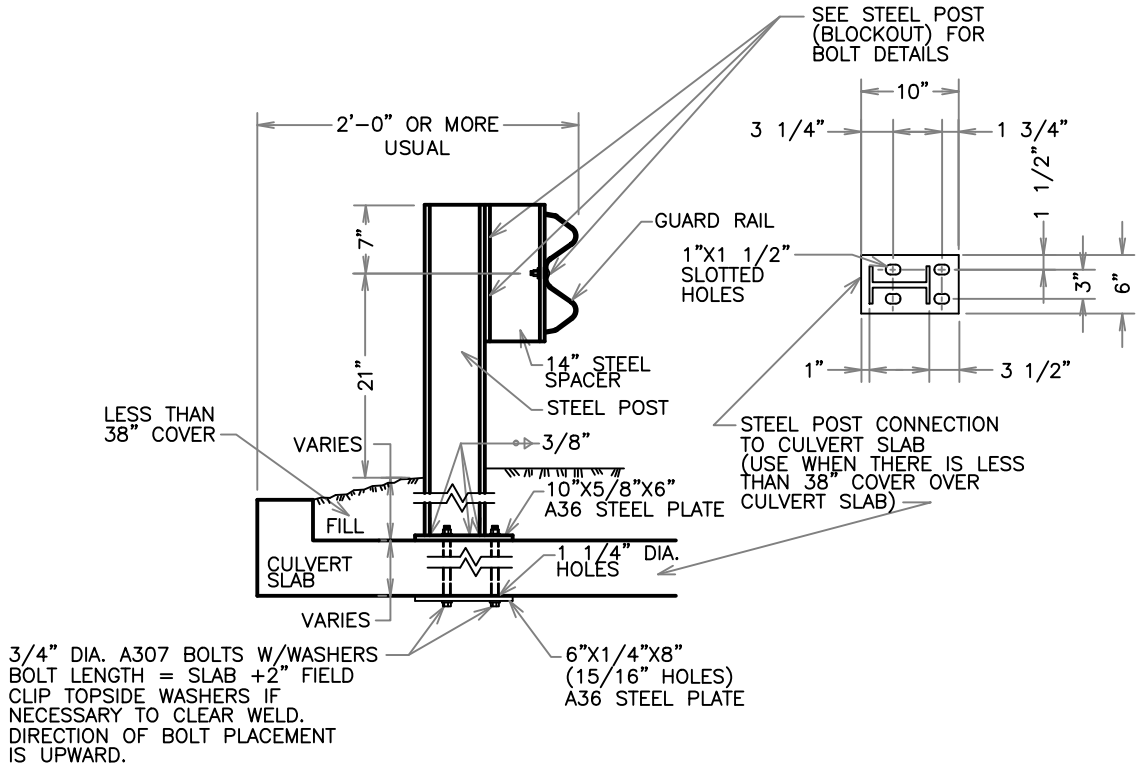

LOW FILL CULVERT POST MOUNTING OPTION

WACO

ENGINEERING SERVICES

REVISIONS

NO.	COMMENTS	BY	DATE
02	REMOVE SEAL	DG	09/03/2014
01	UPDATED	DG	01/10/2011

BOOK PAGE NUMBER 0000

DATE 09/03/2014

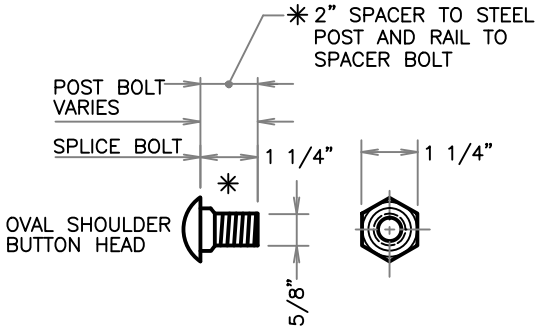

CONNECTOR DETAIL

(7/8" HEX BOLTS REQUIRED FOR TERMINAL CONNECTOR)
✳OR AS APPROVED BY THE ENGINEER

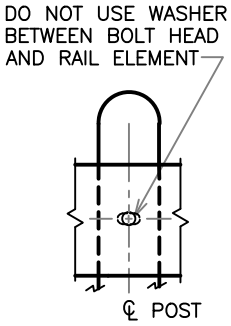

POST CONNECTION WOOD POST

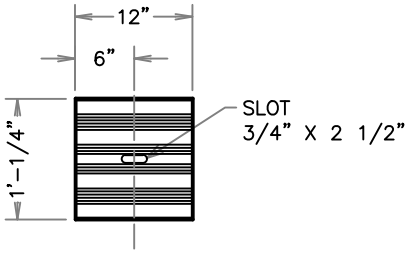

BACK-UP PLATE

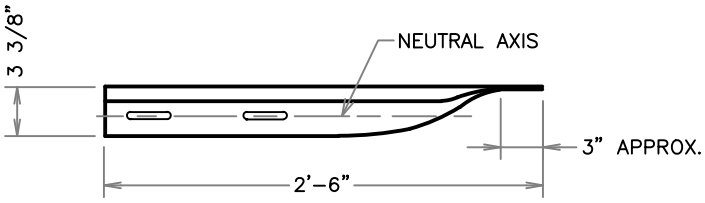

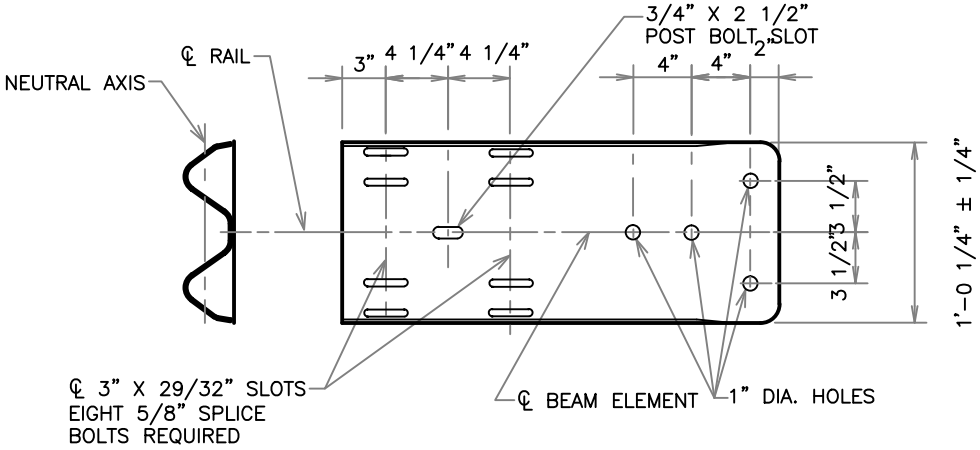

TERMINAL CONNECTOR

(10 GAUGE MINIMUM)

WACO

ENGINEERING SERVICES

REVISIONS

NO.	COMMENTS	BY	DATE
02	REMOVE SEAL	DG	09/03/2014
01	UPDATED	DG	01/10/2011

BOOK PAGE NUMBER 0000

DATE 09/03/2014

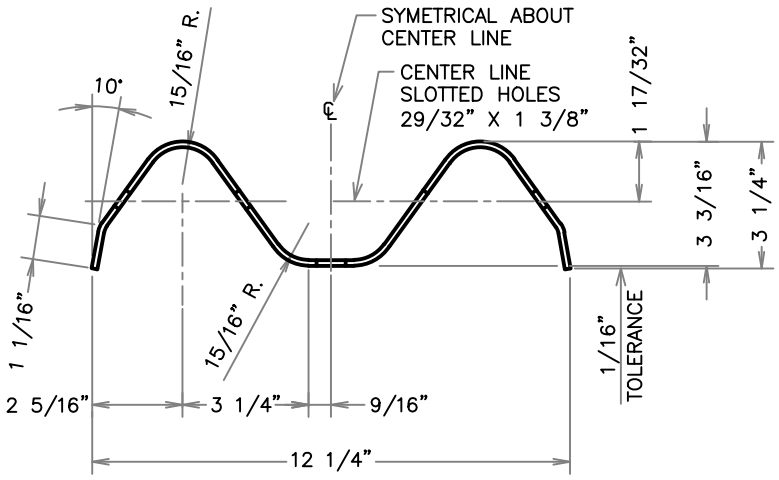

NOTE:
ACTUAL SECTION MAY BE
SLIGHTLY DIFFERENT DEPENDING
UPON THE MANUFACTURER.

SECTION THRU GUARD RAIL

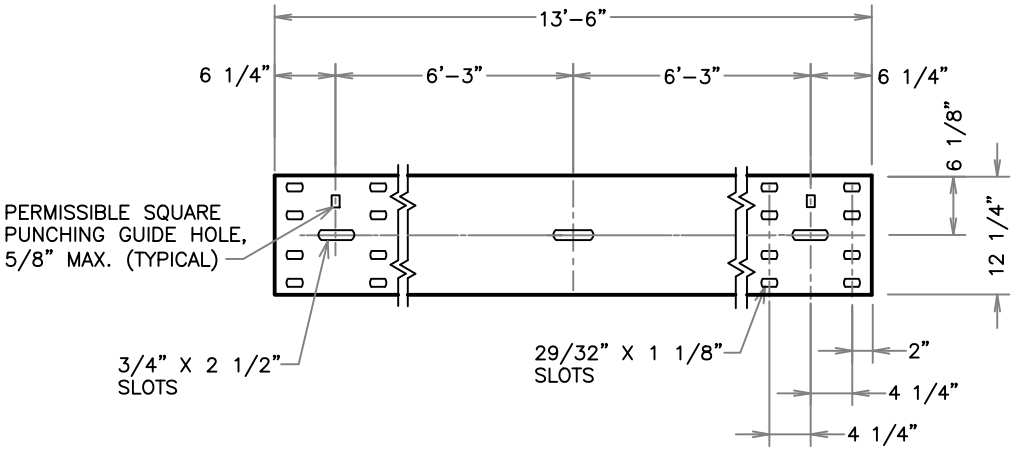

ELEVATION OF NOMINAL

12 1/2 FOOT GUARD RAIL

(25 FOOT SECTIONS MAY ALSO BE SUPPLIED)

WACO

ENGINEERING
SERVICES

REVISIONS

NO.	COMMENTS	BY	DATE
02	REMOVE SEAL	DG	09/03/2014
01	UPDATED	DG	01/10/2011

BOOK PAGE NUMBER
0000

DATE
09/03/2014

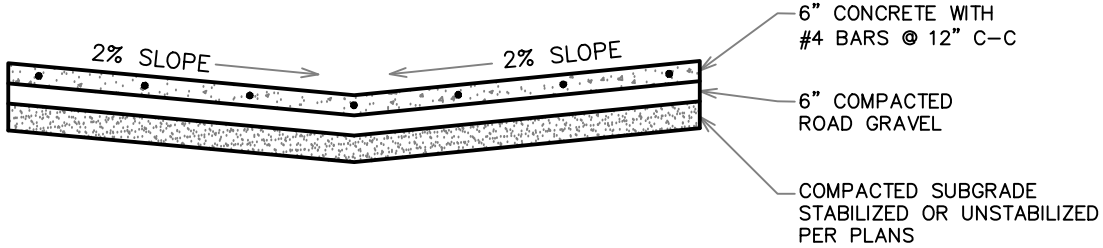

STANDARD ALLEY SECTION

ST-21

WACO

ENGINEERING SERVICES

REVISIONS			
NO.	COMMENTS	BY	DATE
02	REMOVE SEAL	DG	09/03/2014
01	UPDATED	DG	01/10/2011

BOOK PAGE NUMBER 0000

DATE 09/03/2014

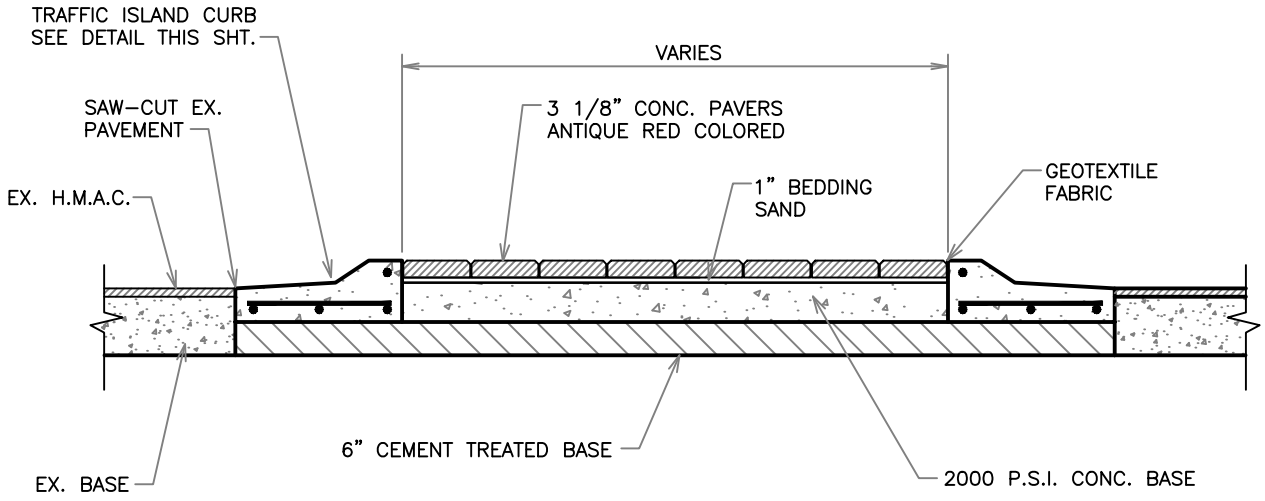

TYPICAL MEDIAN

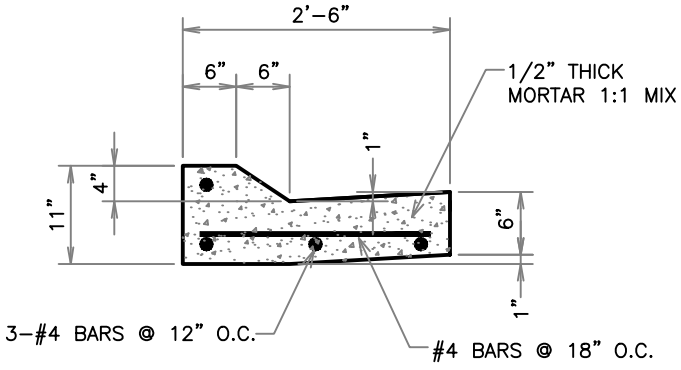

DIRECT FLOW

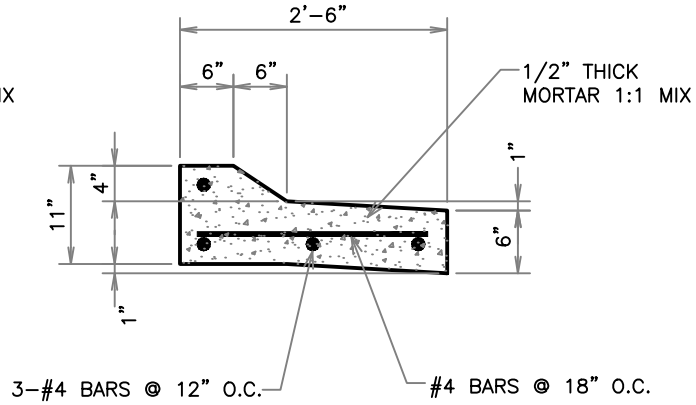

IN-DIRECT FLOW

TRAFFIC ISLAND CURB

WACO

ENGINEERING SERVICES

REVISIONS

NO.	COMMENTS	BY	DATE
1	REMOVE SEAL	DG	09/03/2014

BOOK PAGE NUMBER 0000

DATE 09/03/2014

CITY OF WACO

SIDEWALK DETAILS

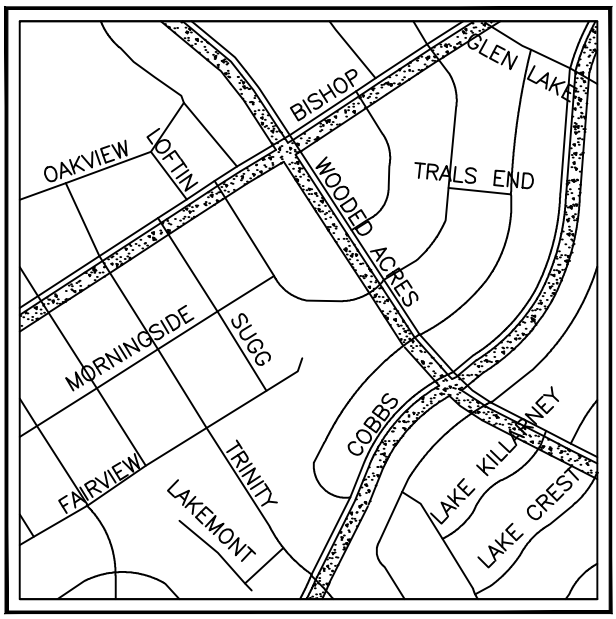

SIDEWALKS - GENERAL

GENERAL

1. ALL CONCRETE AND REINFORCEMENT MATERIALS AND PLACEMENT MUST COMPLY WITH SECTION 5.1 OF THE CITY OF WACO STANDARD SPECIFICATIONS FOR CONSTRUCTION AND WITH ALL NOTES ON SHEET G-10 OF THE CITY OF WACO MANUAL OF STANDARD DETAILS.

2. PROPOSED SIDEWALKS MUST COMPLY WITH THE CITY OF WACO CODES AND ORDINANCES, CHAPTER 22, ARTICLE III, SIDEWALKS.

3. TX-DOT STANDARDS PED-12A, SHEETS 1, 2, AND 3, INCLUDING NOTES, SHALL BE INCORPORATED AS PART OF THE CITY OF WACO STANDARD DETAILS. IN CASE OF CONFLICT, THE WACO DETAILS SHALL GOVERN. TRUNCATED BRICK PAVERS ARE REQUIRED FOR DETECTABLE WARNING STRIPS

4. TX-DOT PED-12A, SHEET 1 SHOWS SOME TYPICAL RAMPS, ILLUSTRATING REQUIRED SLOPES AND DIMENSIONS AS THEY MIGHT BE APPLIED IN A FEW PARTICULAR CIRCUMSTANCES. IF ADEQUATE RIGHT OF WAY IS NOT AVAILABLE FOR THESE TYPICAL RAMPS, ALTERNATE DESIGNS MUST BE CREATED TO FIT WITHIN AVAILABLE RIGHT OF WAY AND STILL SATISFY THE GENERAL SLOPE AND DIMENSIONAL REQUIREMENTS ILLUSTRATED.

CONFIGURATION

5. SIDEWALKS IN C-4 ZONING ARE INTENDED TO BE PEDESTRIAN MEDALLION PATHS. SEE SW-10 THROUGH SW-17.

6. SIDEWALKS AND LANDINGS SHALL BE FORMED AND PLACED AT A MAXIMUM CROSS-SLOPE OF 1.5%. CROSS-SLOPES EXCEEDING 2% WILL NOT BE ACCEPTED.

7. NEW SIDEWALK SHALL BE CONNECTED TO ALL EXISTING ADJACENT WALKS AND STEPS.

8. LANDINGS SHALL BE 5' X 5' MINIMUM WITH A MAXIMUM 2% SLOPE IN ANY DIRECTION, GRADED FOR POSITIVE DRAINAGE TO STREET.

9. IF AN EXISTING GUTTER AT THE ENTRANCE TO A NEW RAMP OR LANDING HAS A CROSS SLOPE GREATER THAN 2%, THE EXISTING GUTTER MUST BE REMOVED AND REPLACED WITH GUTTER TIED TO THE 2% CROSS SLOPE ON ONE SIDE AN THE EXISTING STREET ON THE OTHER. THE SLOPE OF THE NEW GUTTER TOWARD THE STREET MAY NOT EXCEED 1:12.

10. SLOPE OF RAMPS SHALL NOT EXCEED 1:12 UNLESS OTHERWISE NOTED.

11. MINIMUM RAMP WIDTH IS 3' EXCLUSIVE OF FLARED SIDES.

CONSTRUCTION

12. PLACE CONSTRUCTION JOINTS WITH EXPANSION MATERIAL AT MINIMUM 50' INTERVALS. EXPANSION JOINTS SHALL EXTEND THROUGH ANY ADJACENT RETAINING WALL OR TRANSITION CURB.

13. PLACE TOOLED, CRACK CONTROL (DUMMY) JOINTS AT A SPACING EQUAL TO THE WIDTH OF THE WALK.

14. CHANGES IN LEVEL GREATER THAN 1/4 INCH ARE NOT PERMITTED ALONG SIDEWALKS.

15. WHERE SIDEWALK OR WHEELCHAIR RAMP TOUCHES BACK OF CURB, INLET, POLE OR ANY STRUCTURE, PLACE 1/2" EXPANSION JOINT MATERIAL AND #4 DOWEL PINS @ 24" C-C.

16. WORKMANSHIP MUST BE SUCH AS TO PRODUCE A RAMP WITH A NEAT, UNIFORM APPEARANCE. POOR WORKMANSHIP OR APPEARANCE SHALL BE GROUNDS FOR REMOVAL OR REJECTION OF RAMP AREAS.

SW-2

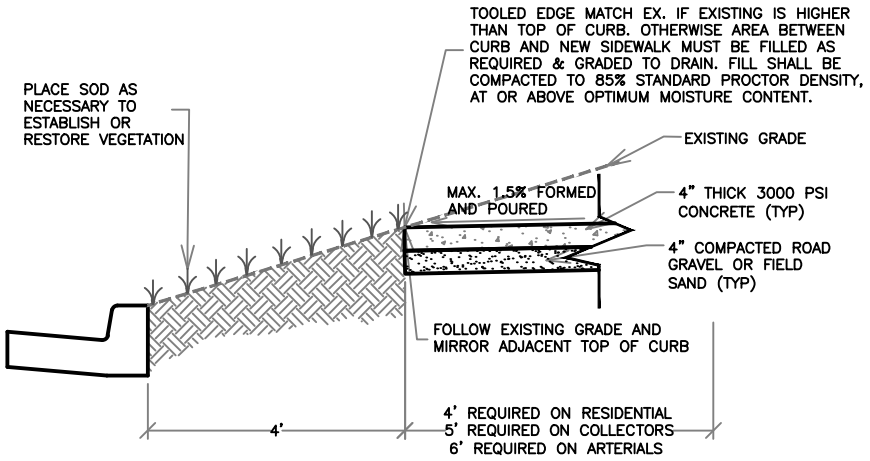

TYPICAL DETAIL OF FRONT OF SIDEWALKS

NOTE:
IF EXISTING GRADE IS LOWER THAN NEW BACK OF SIDEWALK, FILL SHALL BE PLACED WITH MAXIMUM SLOPE OF 25% DOWN TO EXISTING GRADE. FILL SHALL BE COMPACTED TO 85% STANDARD PROCTOR DENSITY AT OR ABOVE OPTIMUM MOISTURE CONTENT.

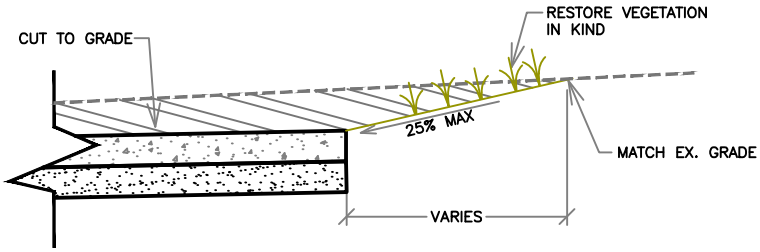

CUT BEHIND SIDEWALK TO MATCH EX. GRADE

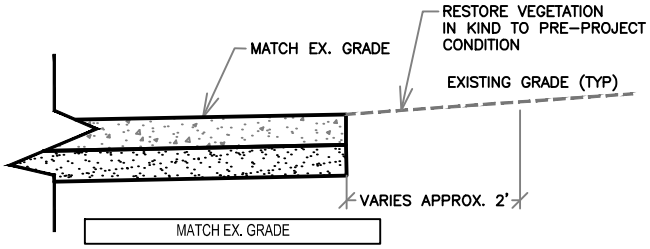

MATCH EX. GRADE

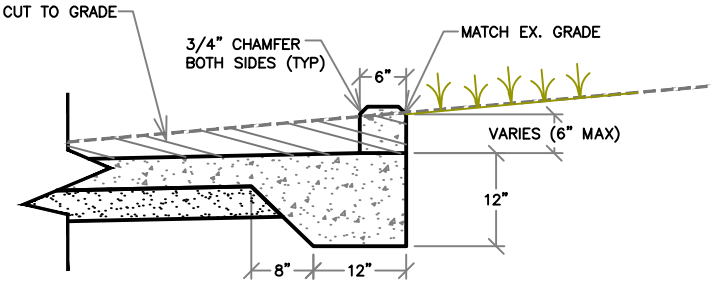

CURB MATCHING EX. GRADE

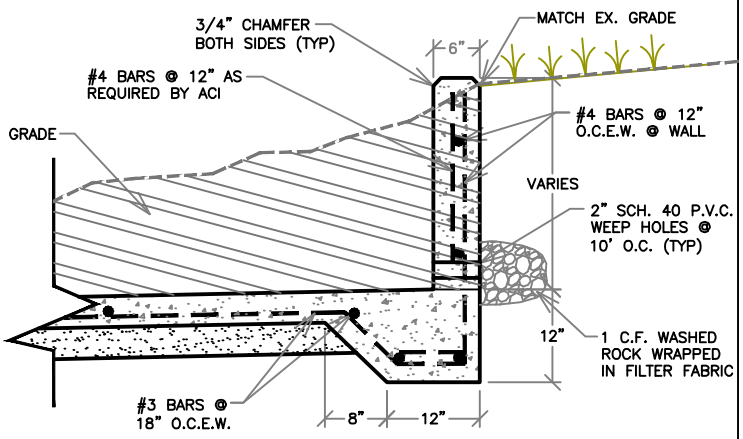

NOTE: #3 BARS SHALL EXTEND TO FRONT OF SIDEWALK

RETAINING WALL MATCHING EX. GRADE

TYPICAL DETAILS OF BACK OF SIDEWALKS

WACO

ENGINEERING SERVICES

REVISIONS

NO.	COMMENTS	BY	DATE
01	REMOVE SEAL	DG	09/03/2014

BOOK PAGE NUMBER
0000

DATE
09/03/2014

SW-3

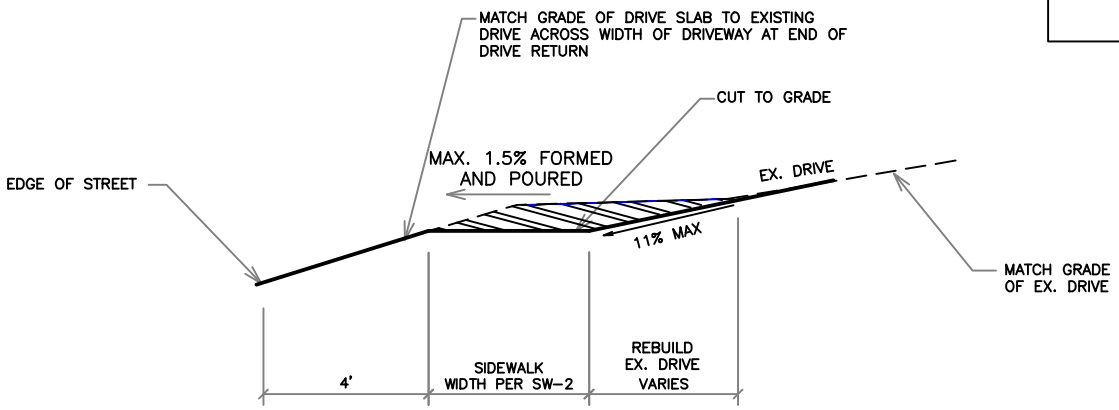

SECTION VIEW
"B" - "B"

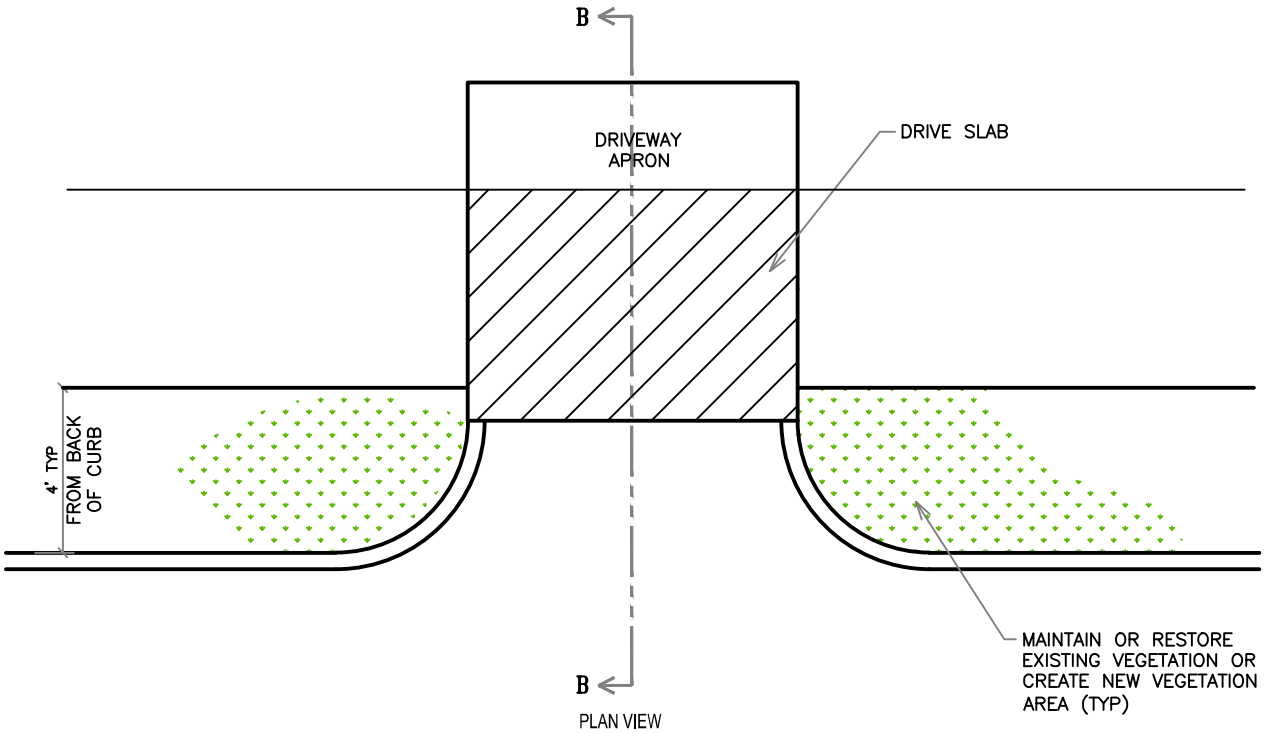

PLAN VIEW

TYPICAL SIDEWALK TREATMENT AT NEW DRIVEWAYS

SCALE
NTS

WACO

ENGINEERING SERVICES

REVISIONS

NO.	COMMENTS	BY	DATE
03	REMOVE SEAL	DG	09/03/2014
02	SLOPE FOR REBUILDING DRIVES FROM 15% MAX. TO 11% MAX.	DG	02/01/2013
01	UPDATED	DG/CA	07/03/2009

BOOK PAGE NUMBER
0000

DATE
09/03/2014

SW-5

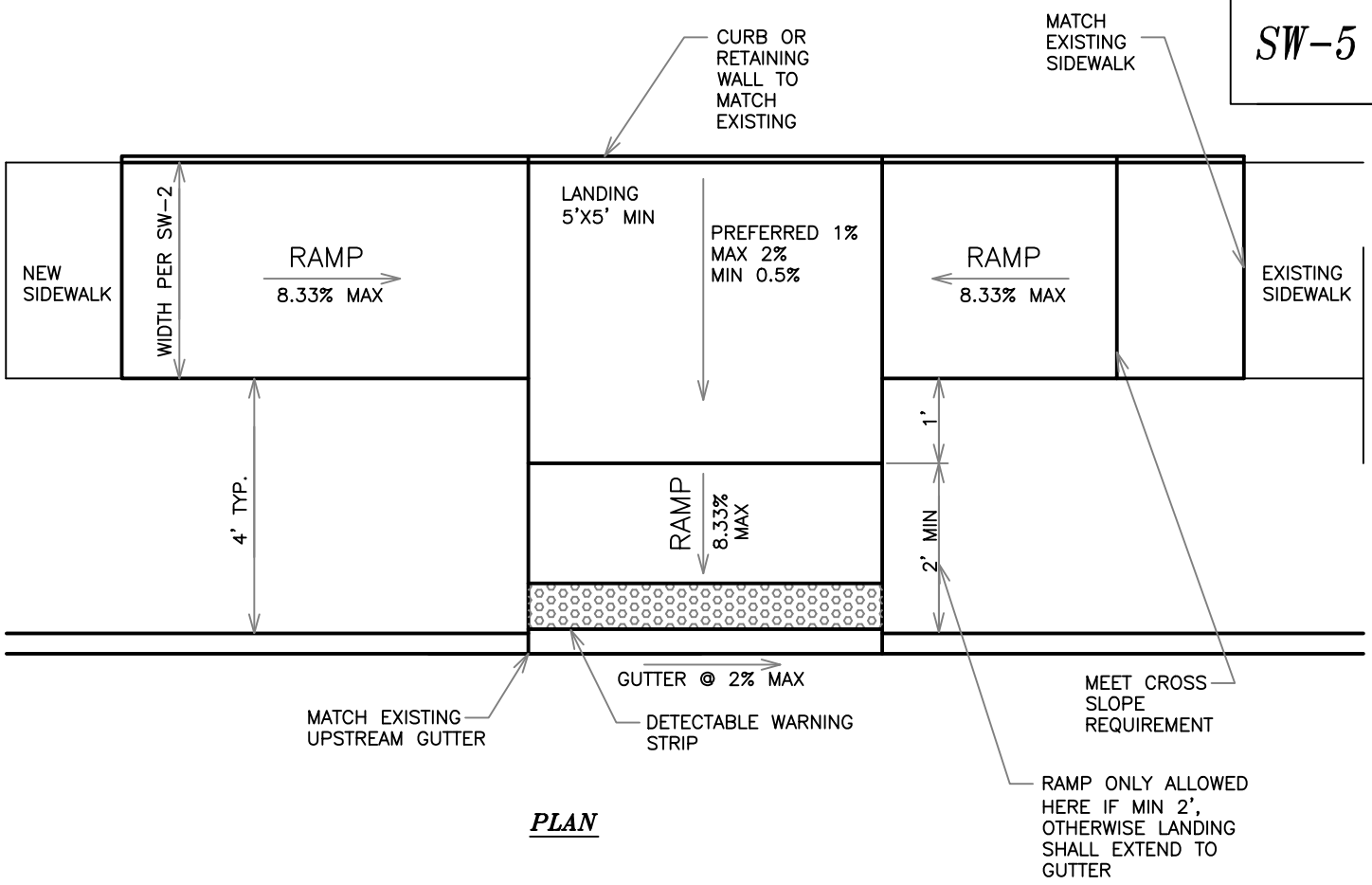

PLAN

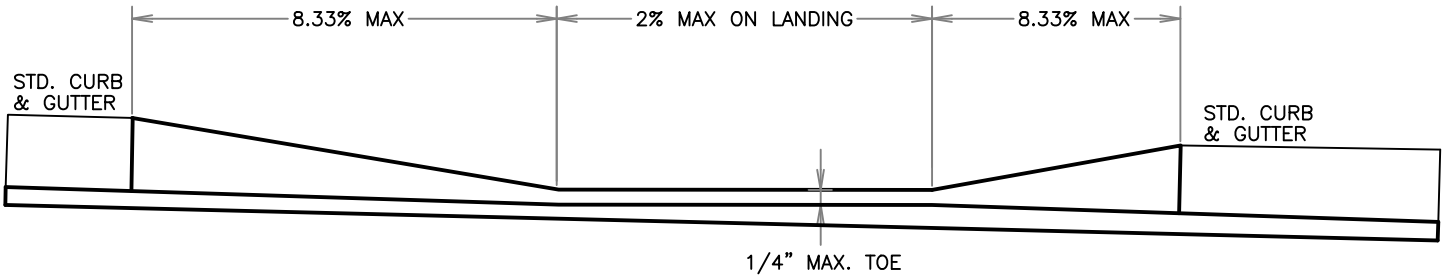

FRONT

TYPICAL MID BLOCK RAMP

SEE NOTES ON DETAIL SW-1 & SW-19

WACO

ENGINEERING SERVICES

REVISIONS

NO.	COMMENTS	BY	DATE
5	REMOVE SEAL	DG	09/03/2014
4	CORRECT PLACEMENT OF DETECTABLE WARNING STRIP	DG	05/01/2014
3	CORRECT PLACEMENT OF DETECTABLE WARNING STRIP	DG	07/17/2013
2	ADD MORE DIMENSIONS	DG	02/01/2013
1	UPDATED	DG	10/05/2010

BOOK PAGE NUMBER 0000

DATE 09/03/2014

SW-6

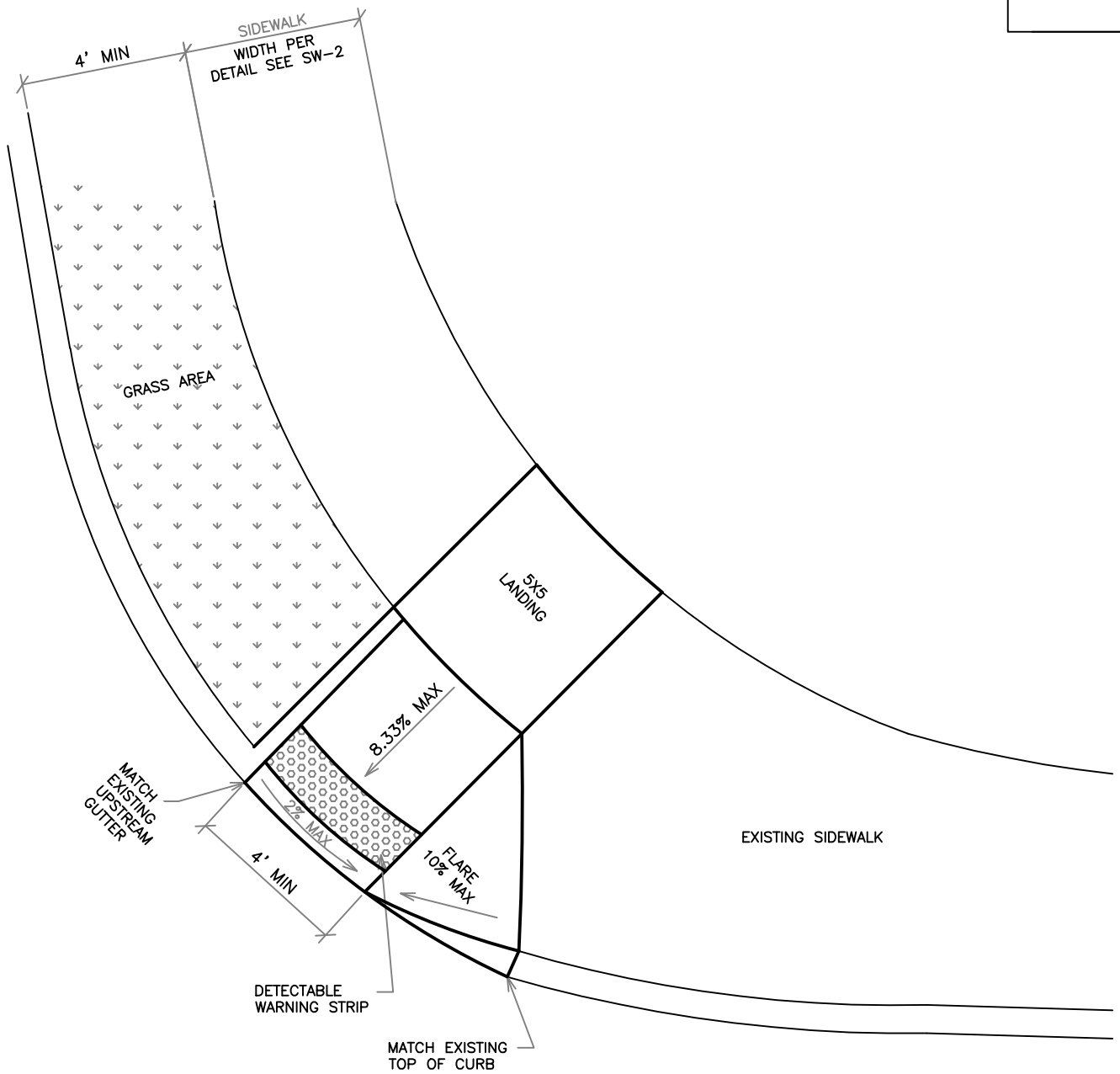

NOTES:

1. CONSTRUCT WITH FLARE IF CONNECTING SIDEWALK IS ADJACENT TO BACK OF CURB.

2. RAMP LENGTH VARIES TO ALLOW 8.33% MAX SLOPE.

STANDARD TYPE 1 CURB RAMP COMBINATION

WACO

ENGINEERING SERVICES

REVISIONS

NO.	COMMENTS	BY	DATE
3	REMOVE SEAL	DG	09/03/2014
2	REMOVE 4" DIMENSION FROM EDGE OF WARNING STRIP	DG	05/01/2014
1	CORRECT PLACEMENT OF DETECTABLE WARNING STRIP	DAG	07/17/2013

BOOK PAGE NUMBER
0000

DATE
09/03/2014

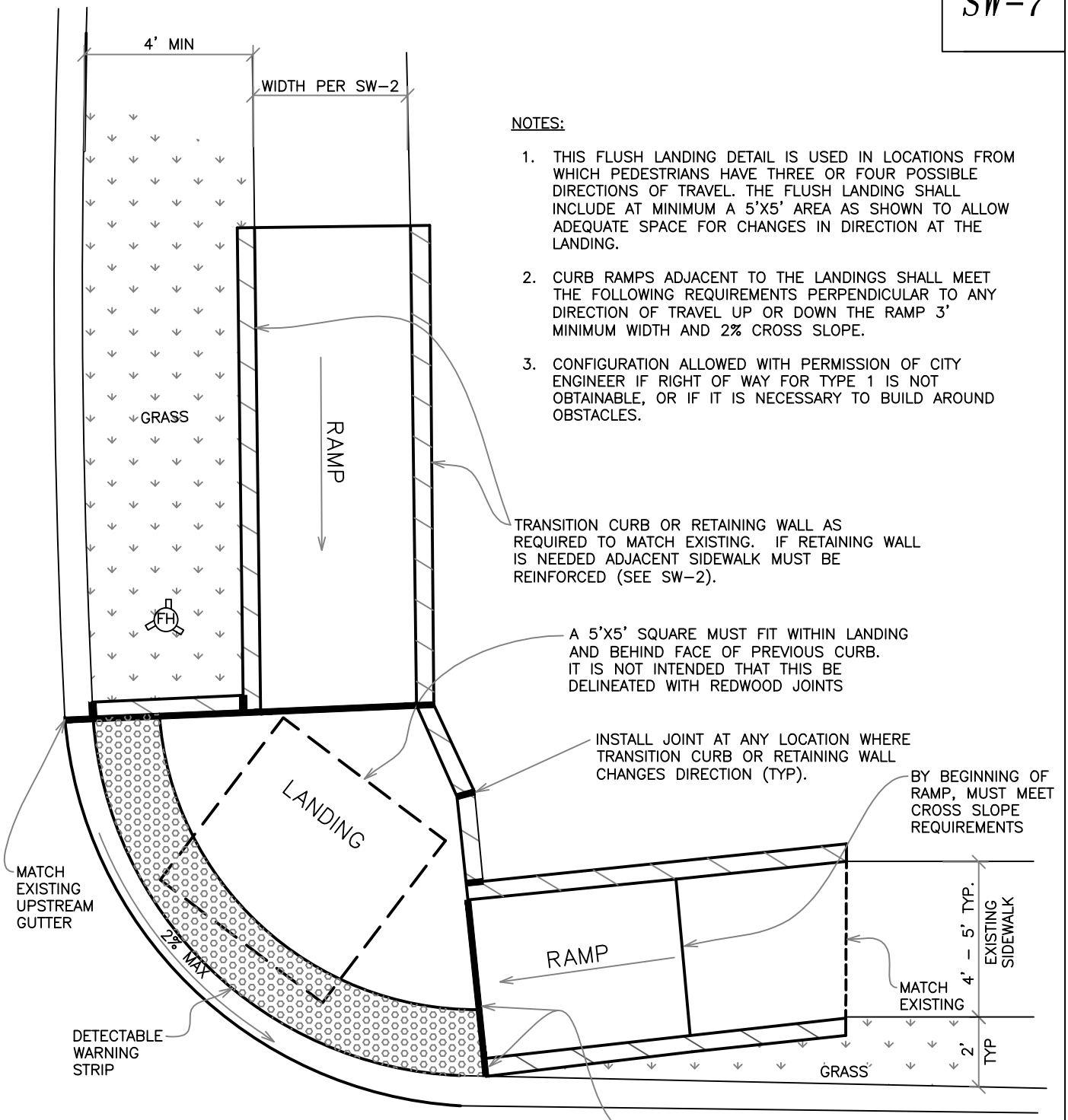

NOTES:

1. THIS FLUSH LANDING DETAIL IS USED IN LOCATIONS FROM WHICH PEDESTRIANS HAVE THREE OR FOUR POSSIBLE DIRECTIONS OF TRAVEL. THE FLUSH LANDING SHALL INCLUDE AT MINIMUM A 5'X5' AREA AS SHOWN TO ALLOW ADEQUATE SPACE FOR CHANGES IN DIRECTION AT THE LANDING.
2. CURB RAMPS ADJACENT TO THE LANDINGS SHALL MEET THE FOLLOWING REQUIREMENTS PERPENDICULAR TO ANY DIRECTION OF TRAVEL UP OR DOWN THE RAMP 3' MINIMUM WIDTH AND 2% CROSS SLOPE.
3. CONFIGURATION ALLOWED WITH PERMISSION OF CITY ENGINEER IF RIGHT OF WAY FOR TYPE 1 IS NOT OBTAINABLE, OR IF IT IS NECESSARY TO BUILD AROUND OBSTACLES.

STANDARD TYPE 2 CURB RAMP COMBINATION WITH FLUSH LANDING

WACO

ENGINEERING SERVICES

REVISIONS

NO.	COMMENTS	BY	DATE
04	REMOVE SEAL	DG	09/03/2014
03	ADD NOTES REGARDING FLUSH LANDINGS	DG	05/02/2014
02	CORRECT PLACEMENT OF DETECTABLE WARNING STRIP	DG	07/17/2013
01	MOVE CURB TO THE OUTSIDE OF THE RAMP	DG	02/01/2013

BOOK PAGE NUMBER 0000

DATE 09/03/2014

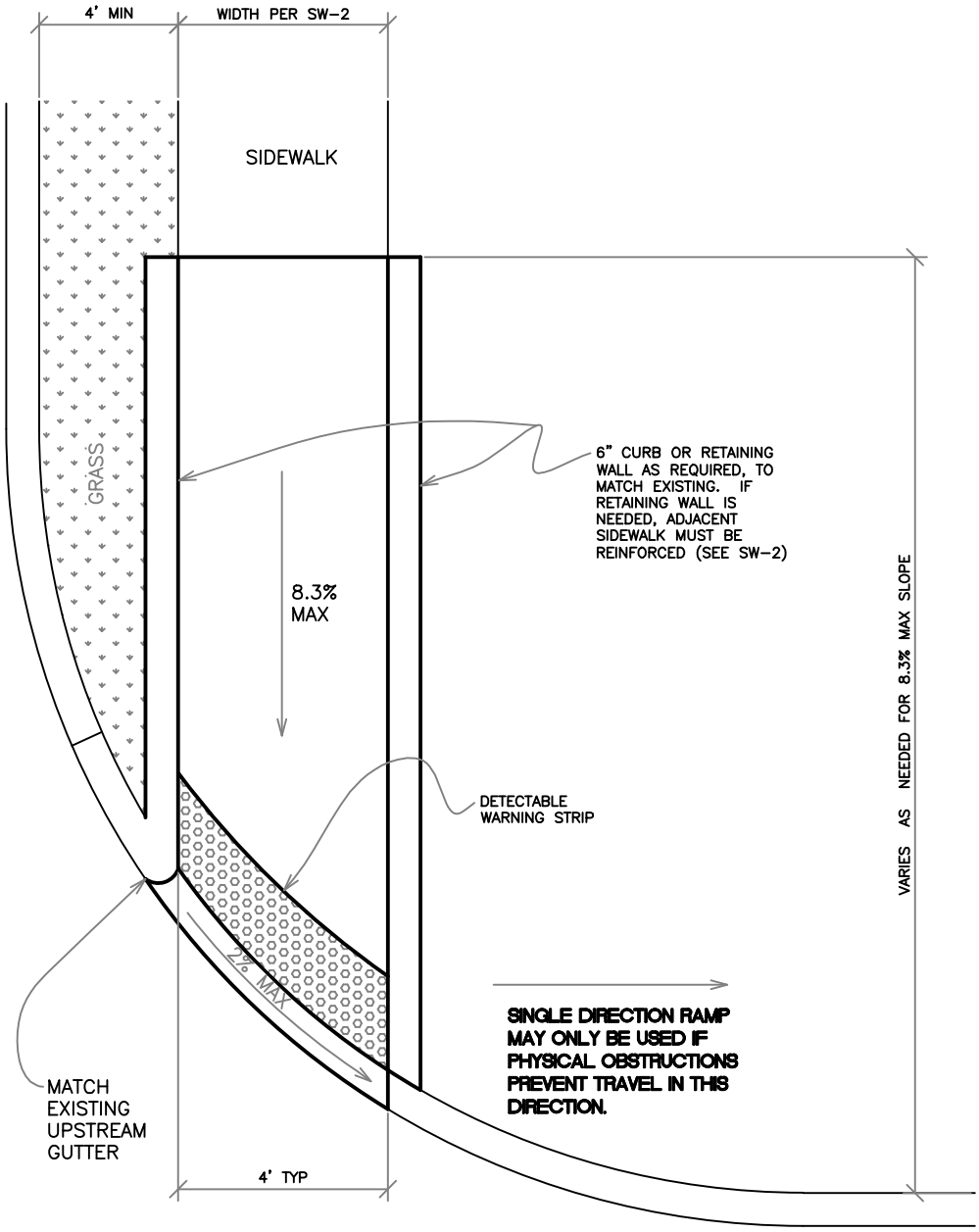

STANDARD TYPE 3 CURB RAMP

WACO

ENGINEERING SERVICES

REVISIONS

NO.	COMMENTS	BY	DATE
03	REMOVE SEAL	DG	09/03/2014
02	CORRECT PLACEMENT OF DETECTABLE WARNING STRIP	DG	07/17/2013
01	MOVE CURB TO THE OUTSIDE OF THE RAMP	DG	02/01/2013

BOOK PAGE NUMBER 0000

DATE 09/03/2014

PEDESTRIAN MEDALLION PATHS - GENERAL NOTES

GENERAL

1. ALL CONCRETE AND REINFORCEMENT MATERIALS AND PLACEMENT MUST COMPLY WITH SECTION 5.1 OF THE CITY OF WACO STANDARD SPECIFICATIONS FOR CONSTRUCTION.

2. PLEASE REFER TO CITY OF WACO MANUAL OF STANDARD DETAILS G-10 FOR GENERAL CONCRETE AND REINFORCEMENT NOTES.

LOCATION

3. LOCATION OF MAP OF DOWNTOWN DISTRICT (PLEASE REFER TO SW-9A). INTENDED FOR ALL SIDEWALK, C-4 ZONING, AND SUBMITTALS. NEED TO BE REVIEWED AND APPROVED BY PLANNING.

CONSTRUCTION

4. TOOL ALL EXPOSED EDGES (TYPICAL).

5. PEDESTRIAN MEDALLION PATHS AT CROSSWALKS SHALL BE INSTALLED W/STANDARD PARABOLIC CROWN. H.M.C.A. LEVEL-UP SHALL BE PLACED SO AS TO PROVIDE A SMOOTH TRANSITION CONTRACTOR SHALL VERIFY THAT THE PEDESTRIAN CROSSING AND LEVEL-UP, WILL ALLOW POSITIVE STREET DRAINAGE.

6. SAW-CUT AND REMOVE EXISTING PAVEMENT AS REQUIRED FOR SMOOTH TRANSITION.

7. IF PATH IS ADJACENT TO BACK OF CURB, USE CONSTRUCTION JOINT WITH EXPANSION MATERIAL AND SEALANT.

8. ALL DOWELS SHALL BE ADEQUATELY SUPPORTED TO RETAIN PROPER ALIGNMENT.

9. SAND/CEMENT MIX (NOTE 3 ON SW-10) MUST BE CLEANED FROM TOP OF BRICKS AND WALKWAY.

NOTE: STRUCTURAL CONCRETE SHALL BE CONSTRUCTED IN ACCORDANCE WITH THE AMERICAN CONCRETE INSTITUTE SPECIFICATIONS FOR STRUCTURAL CONCRETE ACI 301-05 PUBLICATION SP-15 (05).

PAVEMENT AND SIDEWALK LEVEL ALIGNMENT:

1) MAINLINE PAVEMENTS IN LONGITUDINAL DIRECTION, THE GAP BELOW A 10FT. UNLEVELED STRAIGHT EDGE RESTING ON HIGH SPOTS SHALL NOT EXCEED 1/8 IN.
2) MAINLINE PAVEMENTS IN TRANSVERSE DIRECTION, THE GAP BELOW A 10 FT. UNLEVELED SIDEWALK RESTING ON HIGH SPOTS SHALL NOT EXCEED 1/4 IN.
3) RAMPS, SIDEWALKS, AND INTERSECTIONS, IN ANY DIRECTION, THE GAP BELOW A 10 FT. UNLEVELED SIDEWALK RESTING ON HIGH SPOTS SHALL NOT EXCEED 1/4 IN.

PEDESTRIAN MEDALLION PATHS GENERAL NOTES:

1. THIS PAGE RESERVED. (MIKE SYKORA & BILL FALCO TO PROVIDE INFORMATION FOR THIS NOTE).

PEDESTRIAN MEDALLION PATHS LEGEND

1. BELGARD INTERLOCKING CONCRETE PAVER UNITS ARE MADE FROM "NO-SLUMP" CONCRETE MIX UNDER EXTREME PRESSURE AND HIGH FREQUENCY VIBRATION AND MEET OR EXCEED THE FOLLOWING REQUIREMENTS:

   ASTM STANDARD C-936

   A. AVERAGE COMPRESSIVE STRENGTH – 8000 PSI.
   B. MAXIMUM WATER ABSORPTION – 5%.
   C. FREEZE-THAW TESTING PER SECTION 8 OF ASTM C-67.

   PRODUCT CODES FOR APPROVED COLORS AND SIZES:
   HOLLAND 80MM (3 1/8") RED/BLACK – 156438202
   HOLLAND 80MM (3 1/8") CHARCOAL – 156438204

2. SAND FILLED JOINTS BETWEEN BRICKS
3. REQUIRED 1" (MAX.) SAND/CEMENT MIX 10% CEMENT BY DRY UNIT WEIGHT OR APPROVED EQUAL BY THE CITY OF WACO
4. PRECAST BUFF COLORED CONCRETE IN-LAY OF TEXAS STAR – 3' X 3' MEDALLION WILL BE SITE SPECIFIED
5. CONCRETE FINISH – BROOM OR SANDBLAST
6. SILICON JOINT SEALANT
7. 1/2" NON-EXTRUDING PRE-MOLDED COMPRESSIBLE MATERIAL, RECESS 3/8" ON TOP FOR SEALANT
8. 2' X 5/8" SLICK DOWEL BARS ONE SIDE WRAPPED OR GREASED @ 2' CENTERS PER CITY SPECIFICATIONS (TYPICAL)
9. OMITTED
10. #4 BARS AT TOP AND BOTTOM OF VERTICAL BENT BAR
11. OMITTED
12. #4 REBARS @ 18" OC-EW (EACH WAY)
13. REQUIRED 3" COMPACTED SAND CUSHION
14. MINIMUM 3000 PSI REINFORCED CONCRETE EXPOSED, ALL LOCATIONS
15. REQUIRED 8" THICK, 2000 PSI REINFORCED CONCRETE UNDER ASPHALT
16. STANDARD WIDTH IS 12'-0". WIDTH MAY BE SCALED DOWN WITH CITY OF WACO PLANNING APPROVAL. TOP SURFACE SHALL HAVE A SMOOTH TRANSITION WITH POSITIVE DRAINAGE.
17. NEW H.M.A.C. TYPE "D" MOD. LEVEL-UP (1 1/2" MIN) LAID WITH POSITIVE DRAINAGE
18. EXISTING H.M.A.C.
19. SAWCUT & REMOVE EXISTING PAVEMENT AS REQUIRED FOR SMOOTH TRANSITION
20. EXISTING PAVEMENT, 8" THICK
21. EXISTING BASE
22. COMPACT EXISTING SUBGRADE TO 95% STANDARD PROCTOR DENSITY AT, OR ABOVE, OPTIMUM MOISTURE CONTENT
23. 6" CONCRETE EDGE – MANDATORY ALL LOCATIONS

SW-11

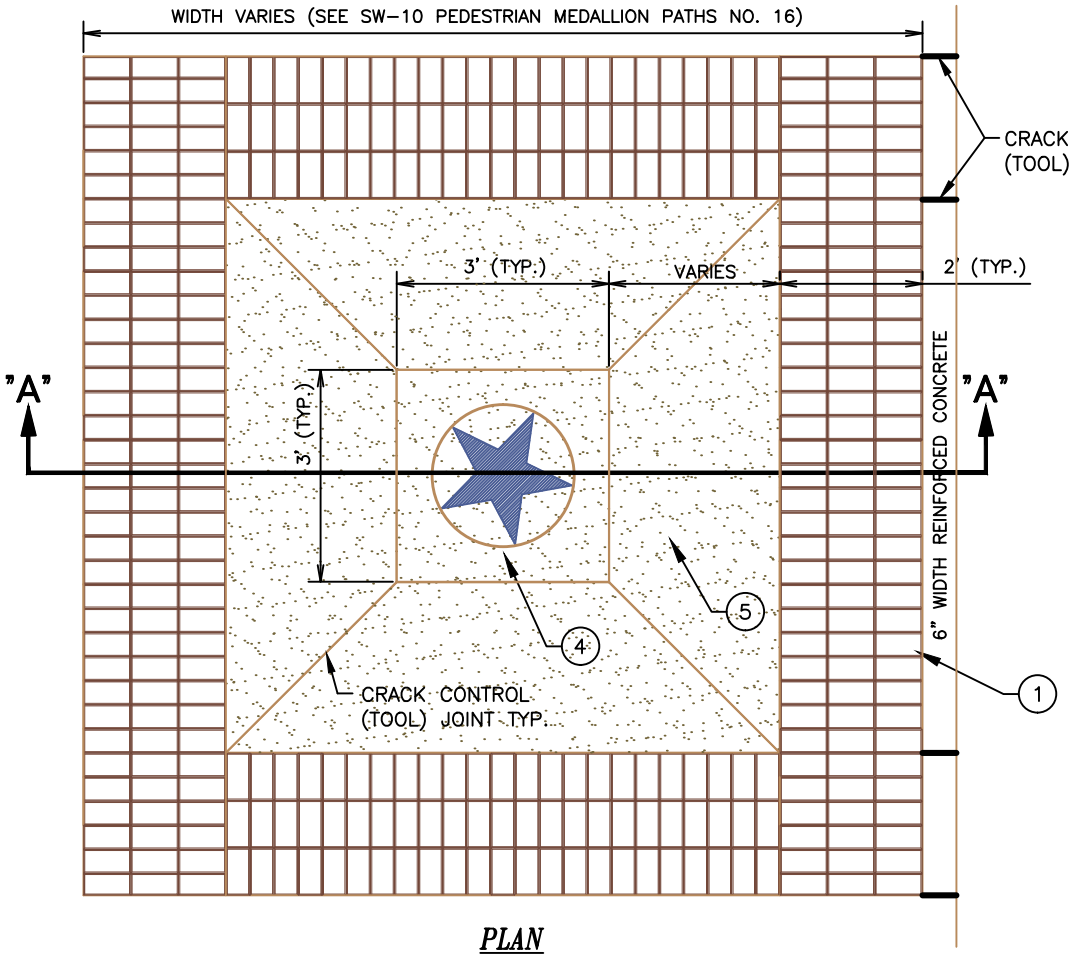

PLAN
(N.T.S.)

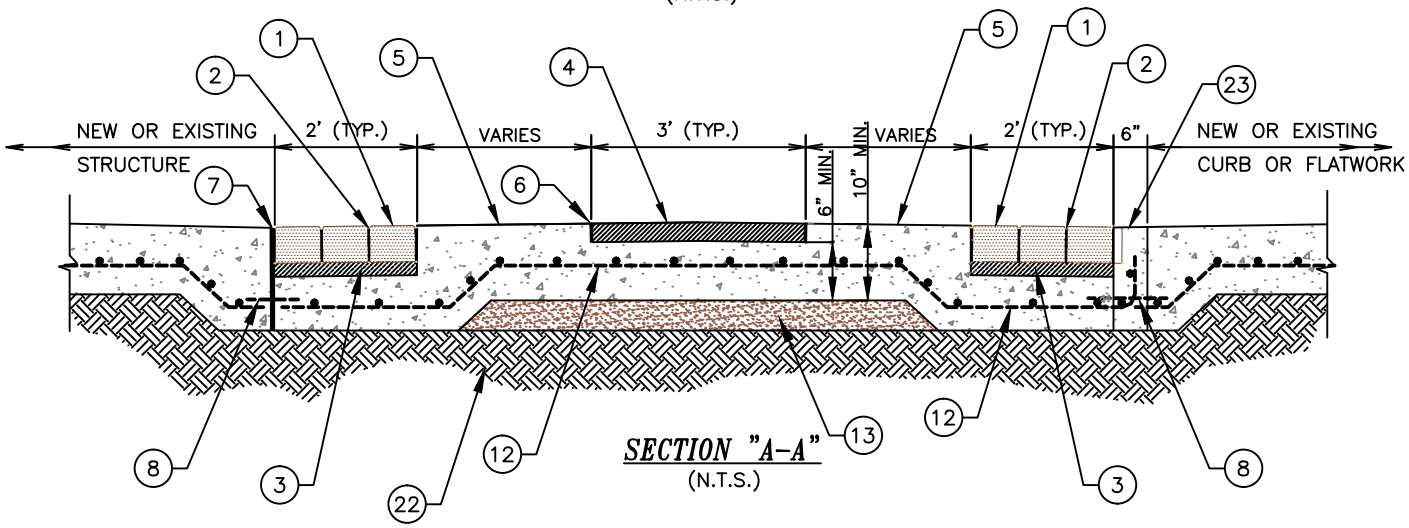

SECTION "A-A"
(N.T.S.)

FOR GENERAL NOTES - SEE SHEET - SW-9
FOR LEGEND DESCRIPTIONS - SEE SHEET - SW-10

PEDESTRIAN MEDALLION PATH DETAILS IN NON-TRAFFIC AREAS

(N.T.S.)

WACO

ENGINEERING SERVICES

REVISIONS

NO.	COMMENTS	BY	DATE
03	REMOVE SEAL	DG	09/03/2014
02	UPDATED LEADER DESIGNATIONS & ADD 6" WIDE CONCRETE TO EDGE.	RK/DG	03/27/2013
01	RELOCATE LEADER DESIGNATION FOR POINTS 12 AND 13.	DG	12/15/2011

BOOK PAGE NUMBER 0000

DATE 09/03/2014

SW-12

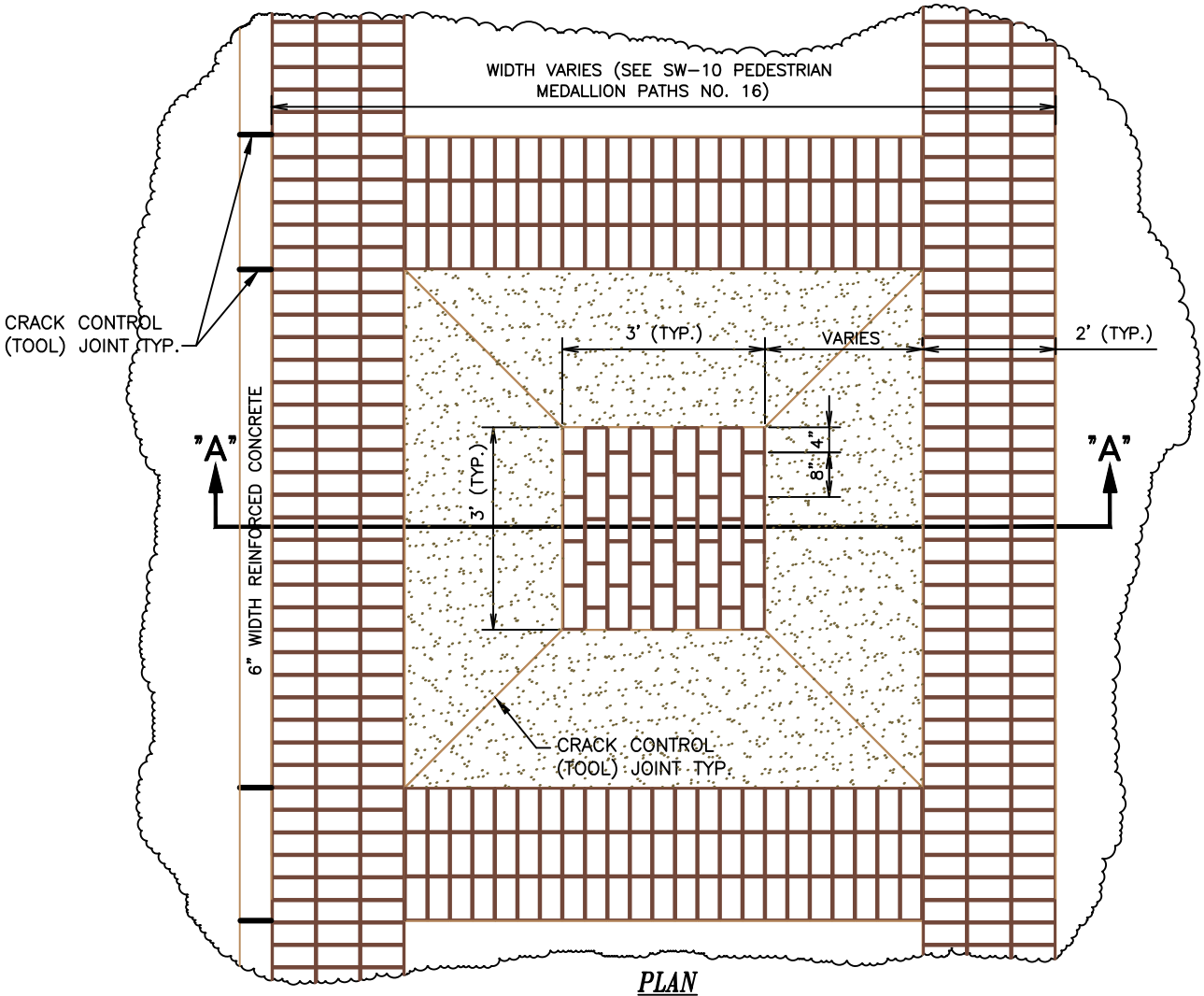

PLAN
(N.T.S.)

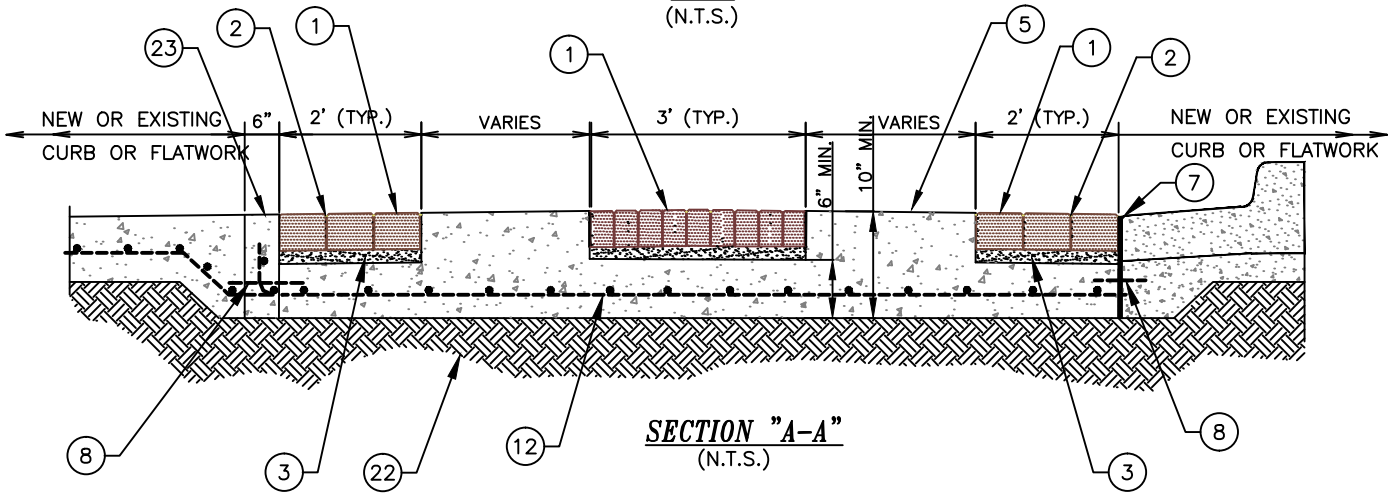

SECTION "A-A"
(N.T.S.)

FOR GENERAL NOTES - SEE SHEET - SW-9
FOR LEGEND DESCRIPTIONS - SEE SHEET - SW-10

PEDESTRIAN BRICK MEDALLION PATH DETAILS IN CONCRETE AREAS, INCLUDING DRIVES
(N.T.S.)

WACO

ENGINEERING SERVICES

REVISIONS

NO.	COMMENTS	BY	DATE
03	REMOVE SEAL	DG	09/03/2014
02	UPDATED LEADER DESIGNATIONS & ADD 6" WIDE CONCRETE TO EDGE.	RK/DG	03/27/2013
01	MAKE REBAR MORE VISIBLE.	DG	12/15/2011

BOOK PAGE NUMBER
0000

DATE
09/03/2014

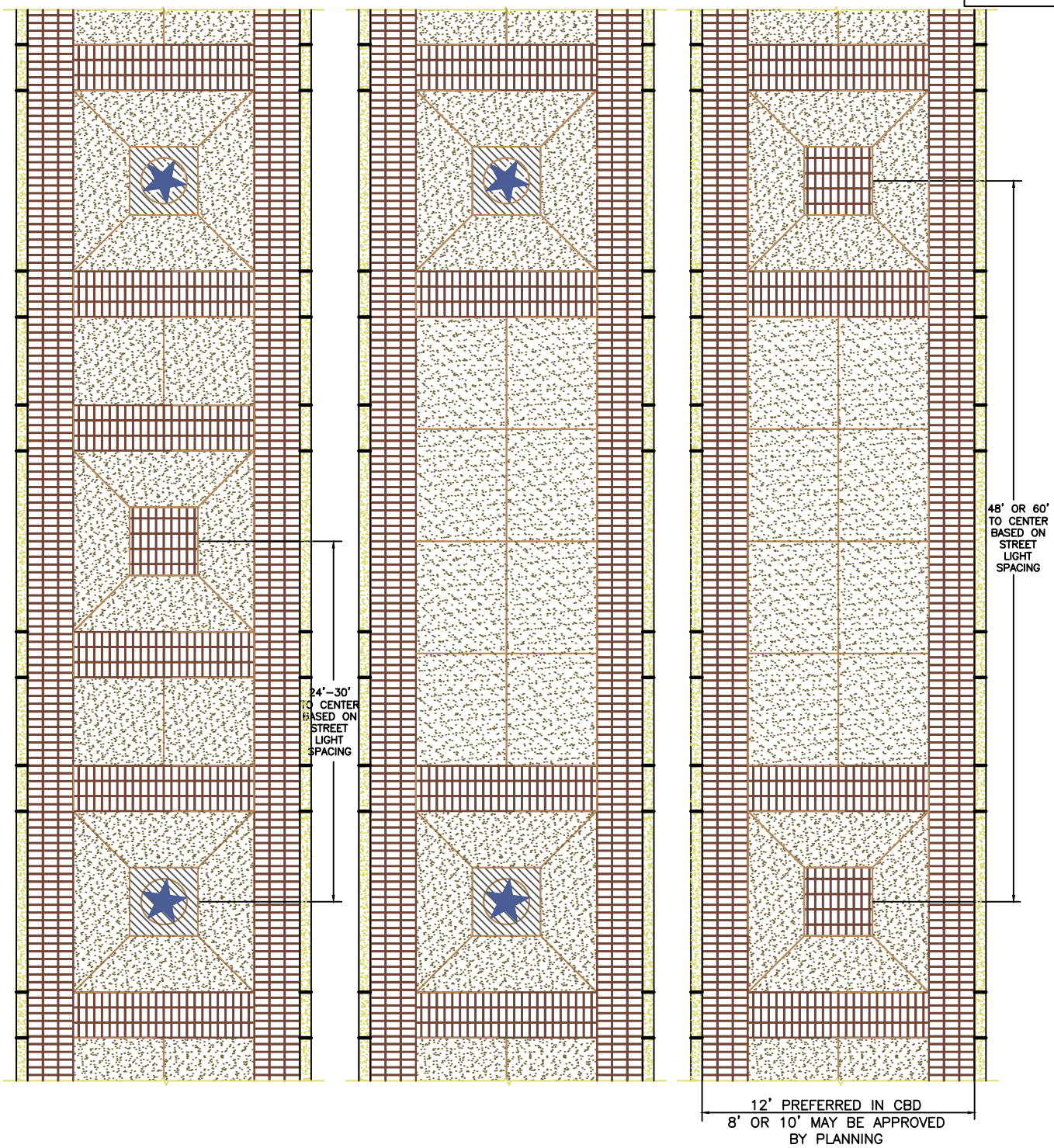

FOR GENERAL NOTES - SEE SHEET - SW-9
FOR LEGEND DESCRIPTIONS - SEE SHEET - SW-10

PEDESTRIAN MEDALLION PATH DETAILS IN NON-TRAFFIC AREAS SPACING

WACO

ENGINEERING SERVICES

REVISIONS

NO.	COMMENTS	BY	DATE
2	REMOVE SEAL	DG	09/03/2014
1	ADD 6" WIDE CONCRETE TO EDGES.	DG	03/27/2013

BOOK PAGE NUMBER 0000

DATE 09/03/2014

SW-14

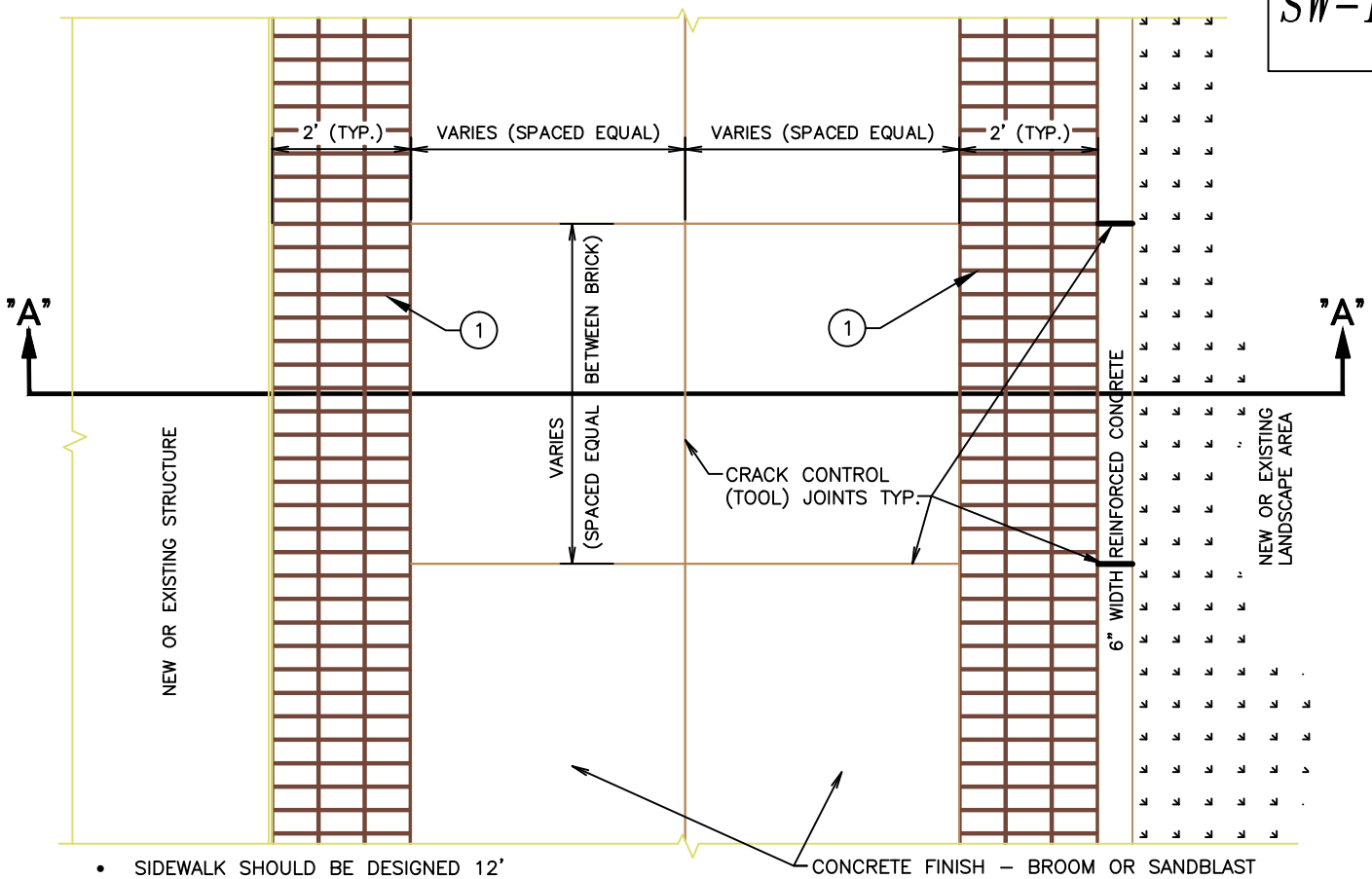

- SIDEWALK SHOULD BE DESIGNED 12' WIDE UNLESS OTHERWISE APPROVED.

PLAN
(N.T.S.)

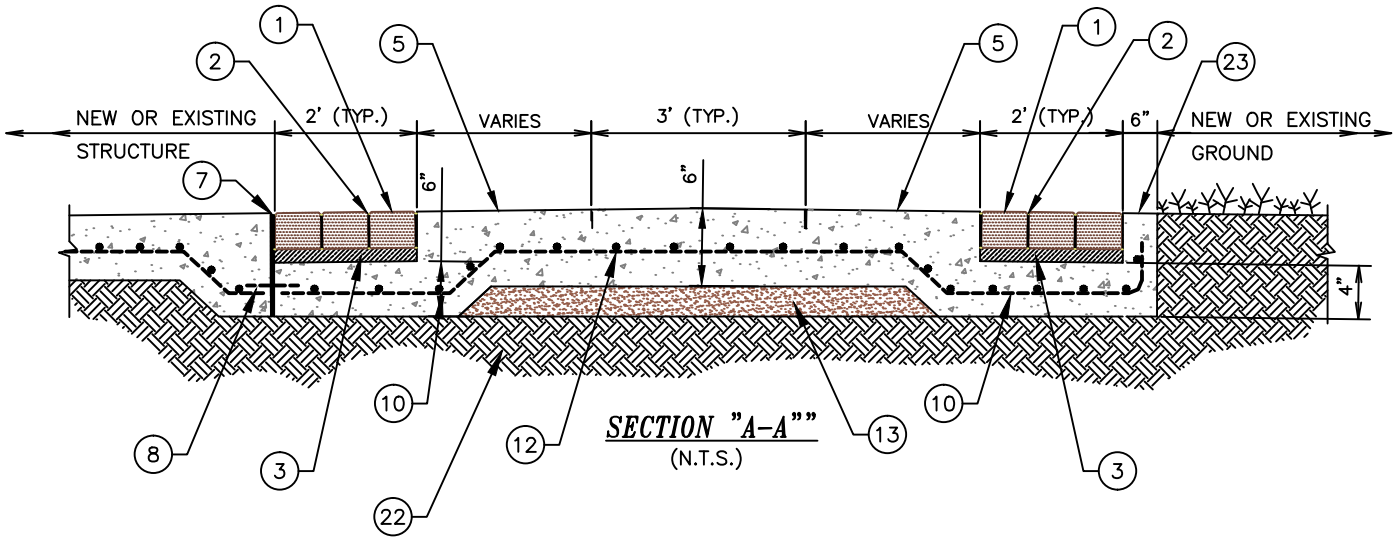

SECTION "A-A""
(N.T.S.)

FOR GENERAL NOTES - SEE DETAIL SW-9
FOR LEGEND DESCRIPTIONS - SEE DETAIL - SW-10

PEDESTRIAN CONCRETE PATH DETAILS IN NON-TRAFFIC AREAS

(N.T.S.)

WACO

ENGINEERING SERVICES

REVISIONS

NO.	COMMENTS	BY	DATE
03	REMOVE SEAL	DG	09/03/2014
02	ADDED NOTE SIDEWALK WIDTH/SHOW CRACK CONTROL TOOL JOINTS.	DG	03/27/2013
01	RELOCATE LEADER DESIGNATION FOR POINTS 12 AND 13.	DG	12/15/2011

BOOK PAGE NUMBER 0000

DATE 09/03/2014

SW-15

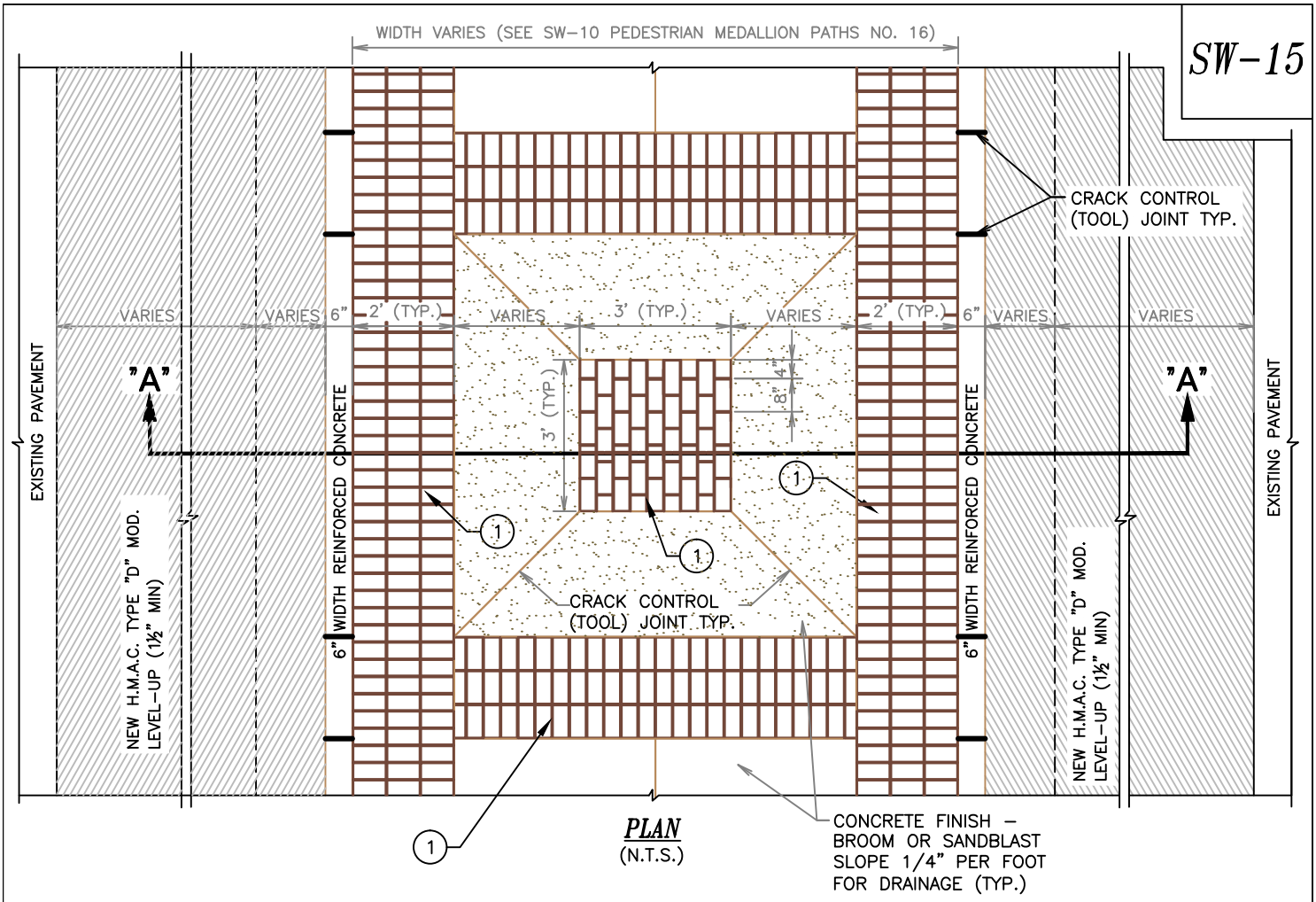

PLAN
(N.T.S.)

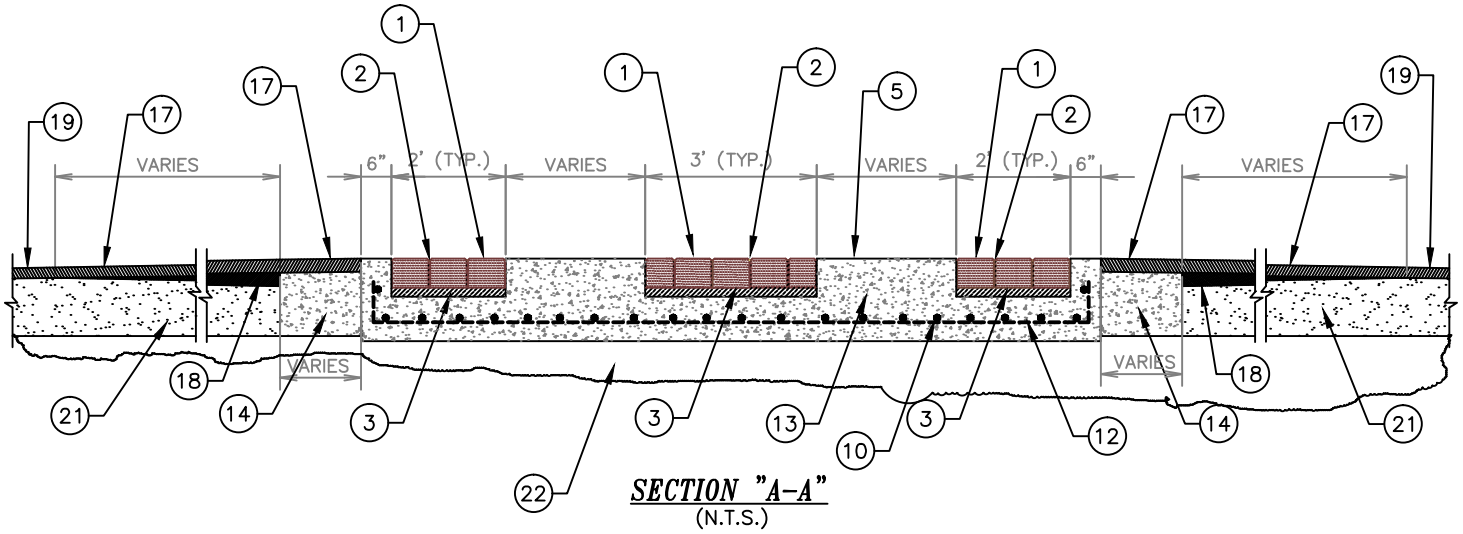

SECTION "A-A"
(N.T.S.)

FOR GENERAL NOTES - SEE DETAIL SW-9
FOR LEGEND DESCRIPTIONS - SEE DETAIL - SW-10

PEDESTRIAN BRICK PAVER MEDALLION PATH DETAILS IN ASPHALT TRAFFIC AREAS, INCLUDING DRIVES
(N.T.S.)

WACO

ENGINEERING SERVICES

REVISIONS

NO.	COMMENTS	BY	DATE
03	REMOVE SEAL	DG	09/03/2014
02	UPDATED LEADER DESIGNATIONS/ADD CRACK CONTROL TOOL JOINTS.	RK/DG	03/27/2013
01	MAKE REBAR MORE VISIBLE.	DG	12/15/2011

BOOK PAGE NUMBER 0000

DATE 09/03/2014

SW-16

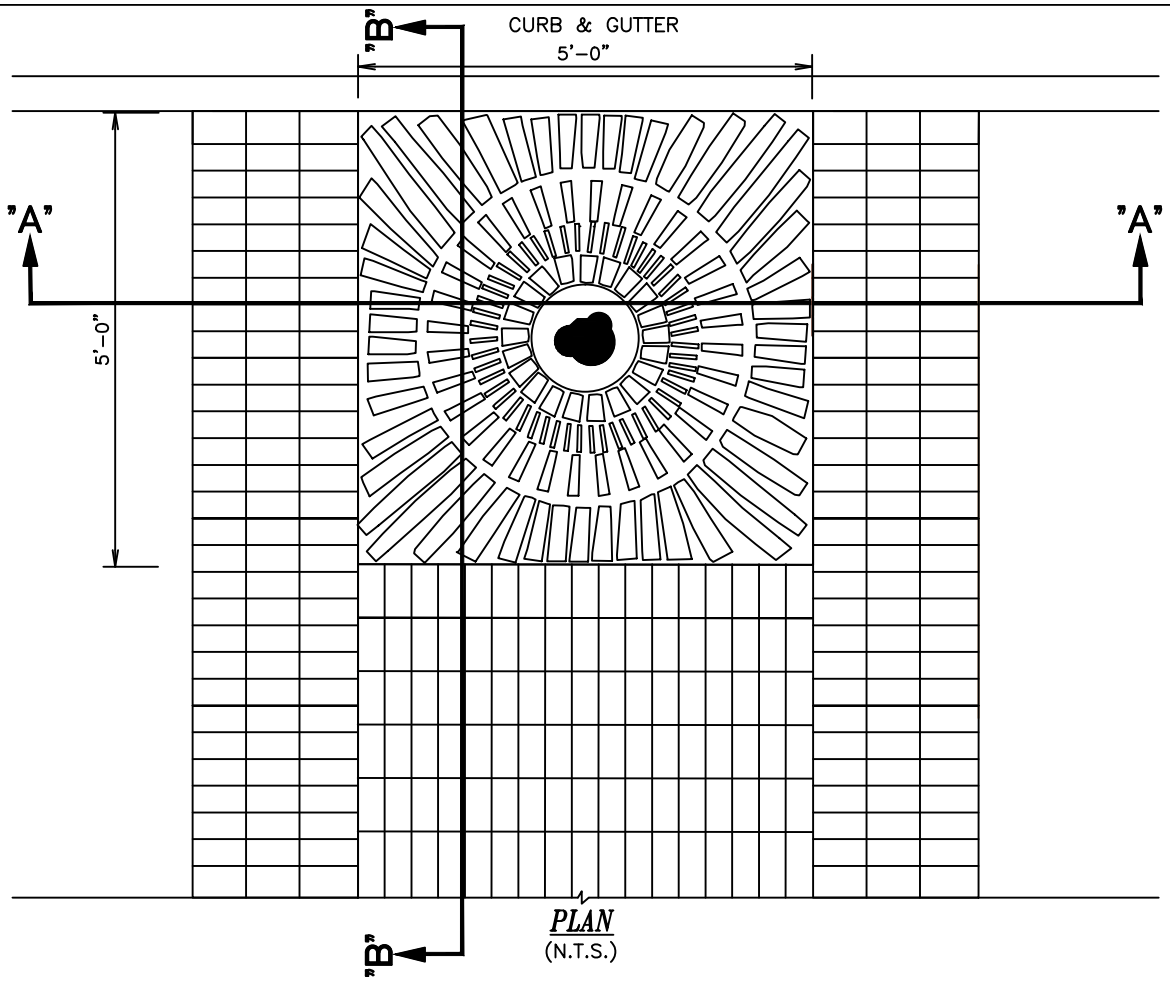

PLAN
(N.T.S.)

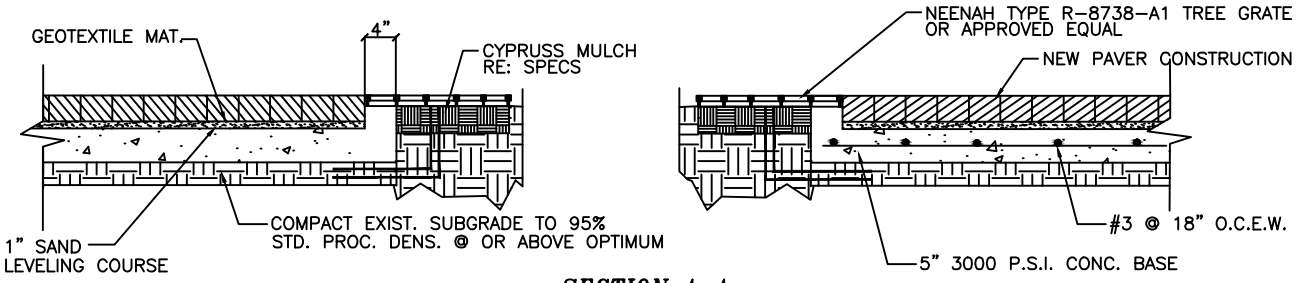

SECTION A-A
(N.T.S.)

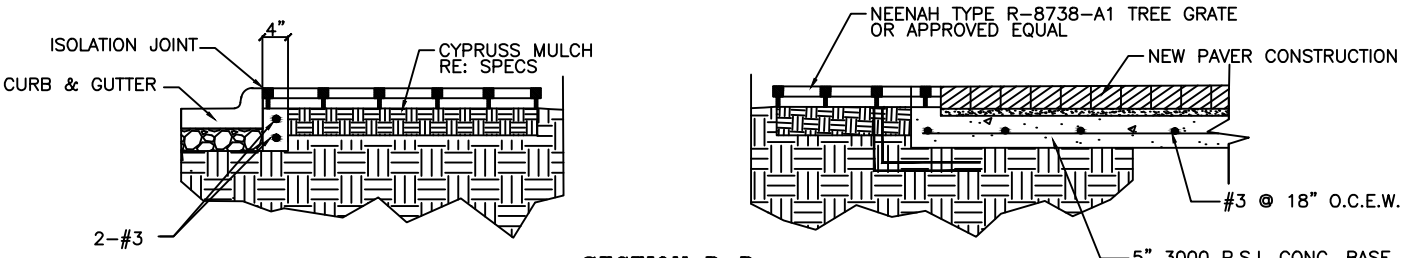

SECTION B-B
(N.T.S.)

TREE GRATE DETAIL
(N.T.S.)

WACO

ENGINEERING SERVICES

REVISIONS

NO.	COMMENTS	BY	DATE
1	REMOVE SEAL	DG	09/03/2014

BOOK PAGE NUMBER
0000

DATE
09/03/2014

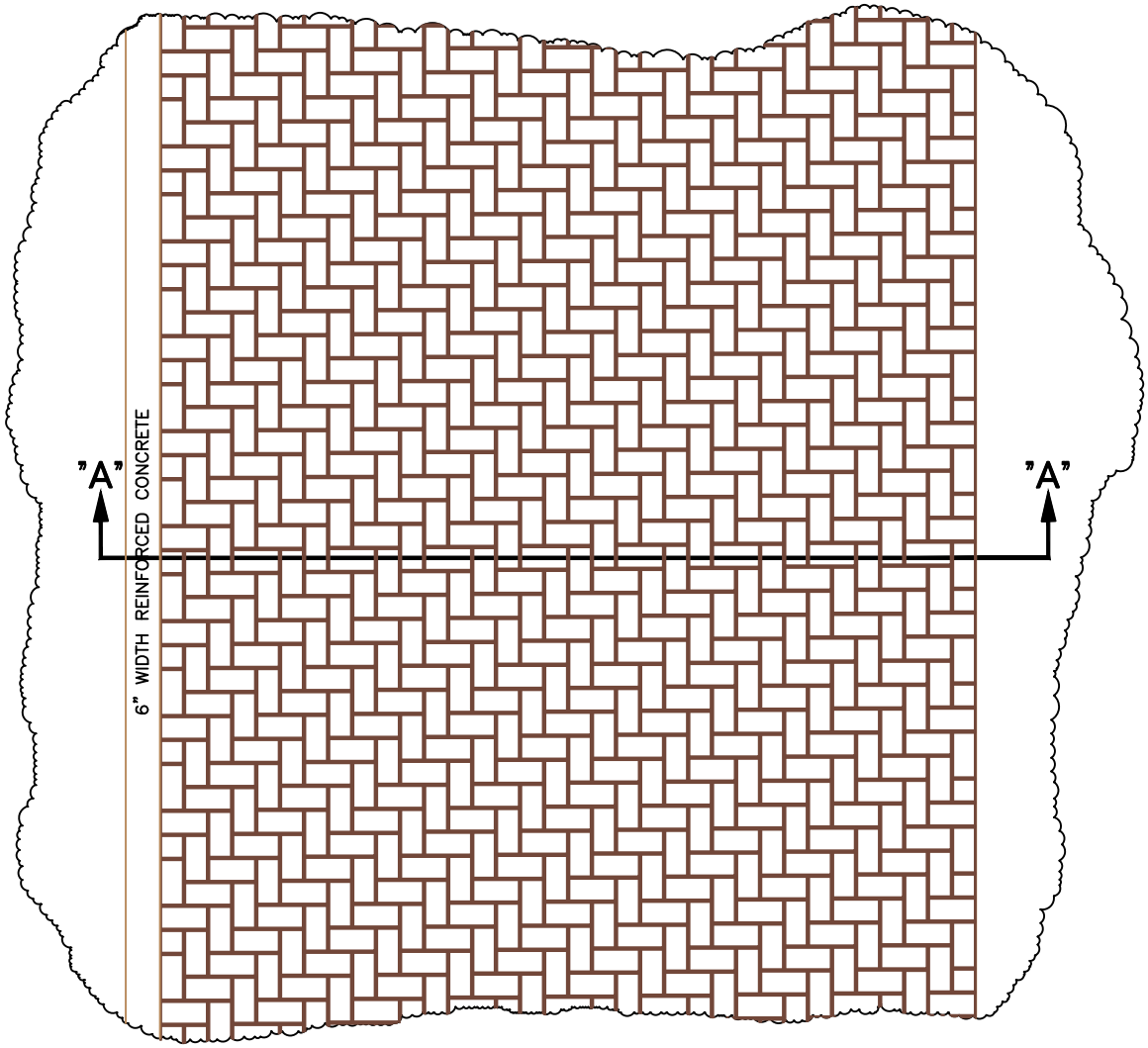

(N.T.S.)

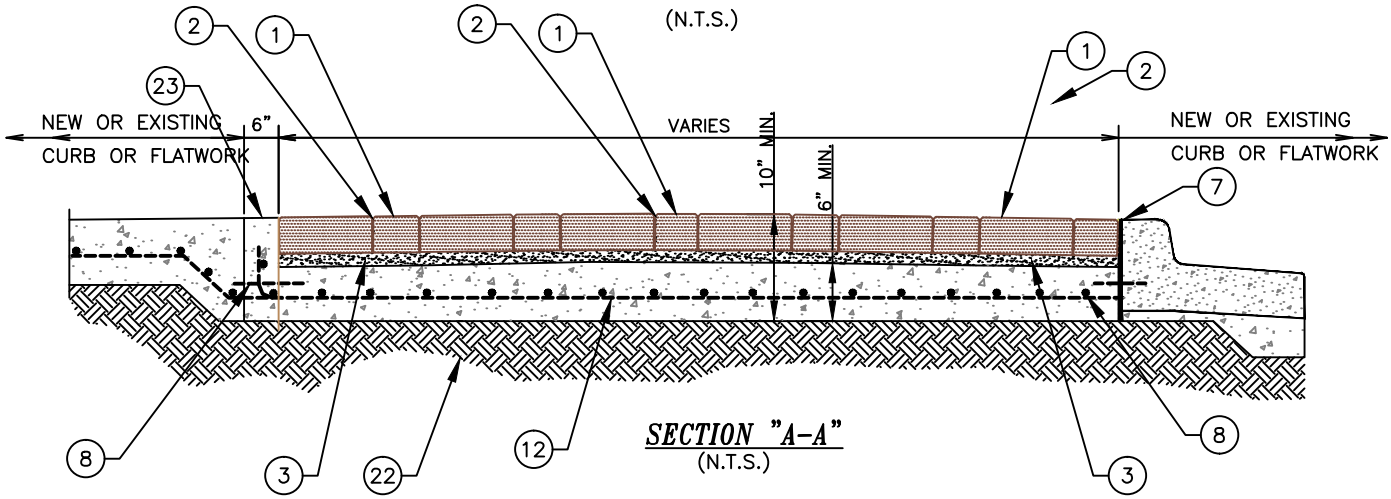

SECTION "A-A"
(N.T.S.)

FOR GENERAL NOTES - SEE SHEET - SW-9
FOR LEGEND DESCRIPTIONS - SEE SHEET - SW-10

PEDESTRIAN BRICK PAVER PATH DETAILS IN CONCRETE AREAS, INCLUDING DRIVES
(N.T.S.)

WACO

ENGINEERING SERVICES

REVISIONS

NO.	COMMENTS	BY	DATE
03	REMOVE SEAL	DG	09/03/2014
02	UPDATED LEADER DESIGNATIONS & ADD 6" WIDE CONCRETE.	RK/DG	03/27/2013
01	MAKE REBAR MORE VISIBLE.	DG	12/15/2011

BOOK PAGE NUMBER
0000

DATE
09/03/2014

TYPE 1

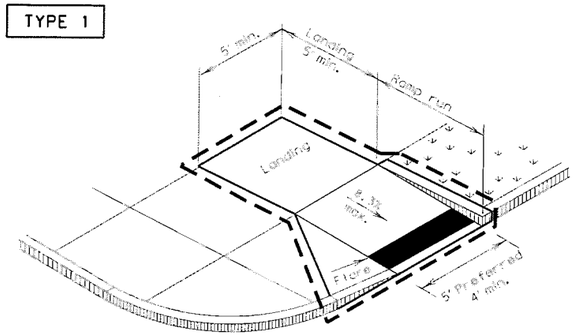

PERPENDICULAR CURB RAMP

TYPE 2

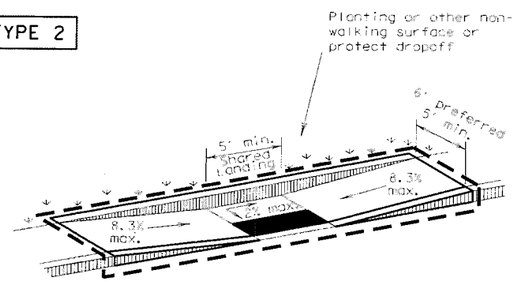

PARALLEL CURB RAMP
(Use only where water will not pond in the landing.)

TYPE 5

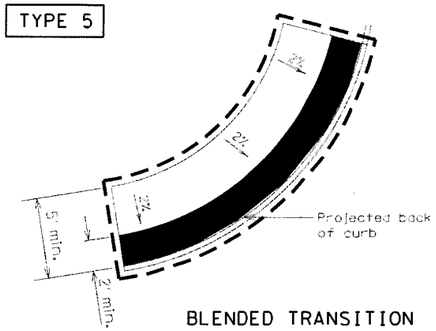

BLENDED TRANSITION

TYPE 20

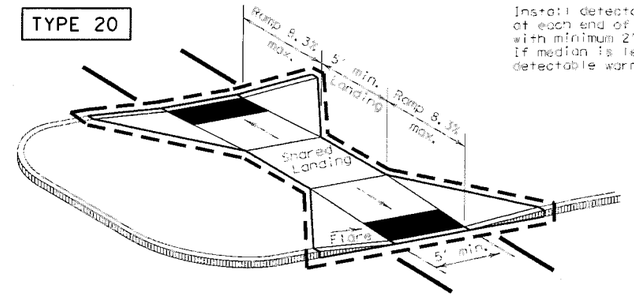

Install detectable warning surface at each end of cut-through ramp with minimum 2' smooth surface between. If median is less than 6' wide, eliminate detectable warning surfaces.

TYPE 21

SW-18

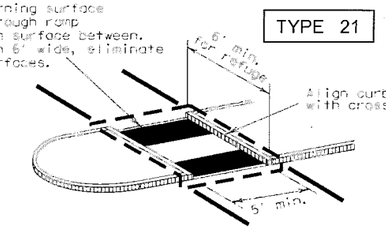

Curb details are shown elsewhere in the plans.

CURB RAMPS AT MEDIAN ISLANDS

TYPE 7

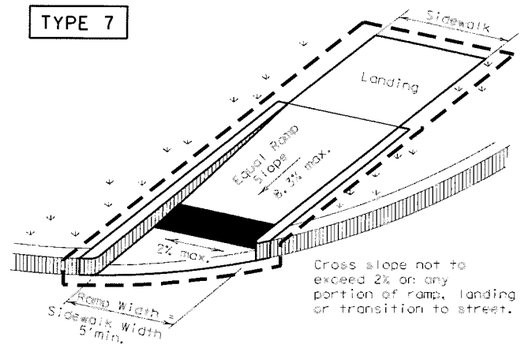

(Sidewalk set back from curb)

TYPE 10

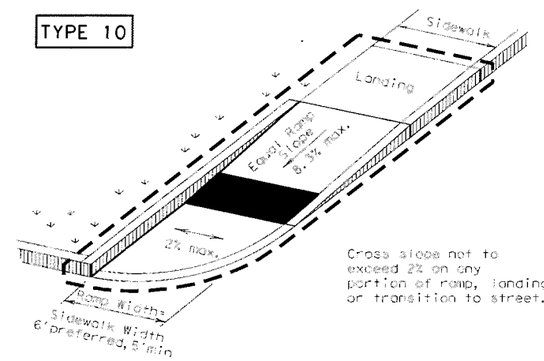

(Sidewalk adjacent to curb)

DIRECTIONAL RAMPS WITHIN RADIUS

TYPE 22

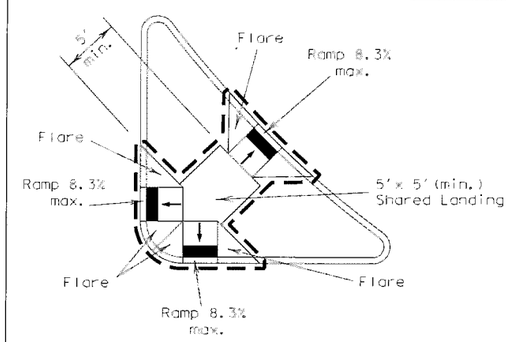

COMBINATION ISLAND RAMPS

TYPE 3

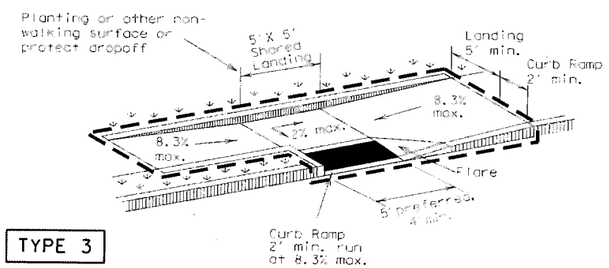

TYPE 11

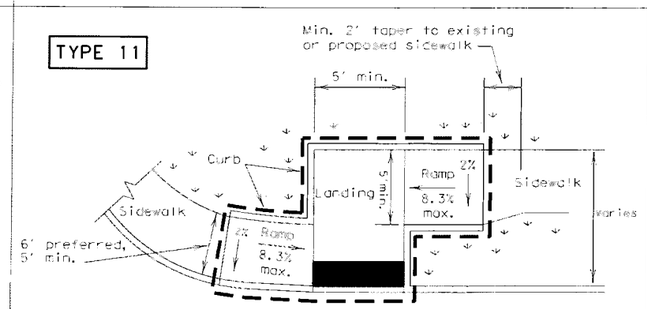

OFFSET PARALLEL CURB RAMP

TYPE 6

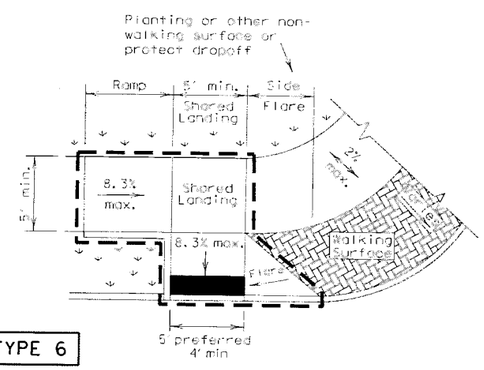

COMBINATION CURB RAMPS

NOTES / LEGEND:

See General Notes on sheet 2 of 4 for more information.

Denotes planting or non-walking surface not part of pedestrian circulation path.

Ramp Limits of Payment

Detectable Warning Surface

Texas Department of Transportation

Design Division Standard

PEDESTRIAN FACILITIES CURB RAMPS

PED-12A

FILE: ped12a.dgn	DW: TxDOT	CK: PK	DW: TxDOT	CK: HD
© TxDOT March 2002	CONT	SECT	JOB	HIGHWAY
REVISIONS				
9P June 13, 2012 •	DIST	COUNTY		SHEET NO.

General Notes

Curb Ramps

1. Install a curb ramp or blended transition at each pedestrian street crossing.
2. All slopes shown are maximum allowable. Lesser slopes that will still drain properly should be used. Adjust curb ramp length or grade of approach sidewalks as directed.
3. The minimum sidewalk width is 5'. Where the sidewalk is adjacent to the back of curb, a 6' sidewalk width is desirable. Where a 5' sidewalk cannot be provided due to site constraints, sidewalk width may be reduced to 4' for short distances. 5'x 5' passing areas at intervals not to exceed 200' are required.
4. Landings shall be 5'x 5' minimum with a maximum 2% slope in any direction.
5. Maneuvering space at the bottom of curb ramps shall be a minimum of 4'x 4' wholly contained within the crosswalk and wholly outside the parallel vehicular travel path.
6. Maximum allowable cross slope on sidewalk and curb ramp surfaces is 2%.
7. Provide flared sides where the pedestrian circulation path crosses the curb ramp. Flared sides shall be sloped at 10% maximum, measured parallel to the curb. Returned curbs may be used only where pedestrians would not normally walk across the ramp, either because the adjacent surface is planted, substantially obstructed, or otherwise protected.
8. Additional information on curb ramp location, design, light reflective value and texture may be found in the current edition of the Texas Accessibility Standards (TAS) and 16 TAC 68.102.
9. To serve as a pedestrian refuge area, the median should be a minimum of 6' wide, measured from back of curbs. Medians should be designed to provide accessible passage over or through them.
10. Small channelization islands, which do not provide a minimum 5'x 5' landing at the top of curb ramps, shall be cut through level with the surface of the street.
11. Crosswalk dimensions, crosswalk markings and stop bar locations shall be as shown elsewhere in the plans. At intersections where crosswalk markings are not required, curb ramps shall align with theoretical crosswalks unless otherwise directed.
12. Handrails are not required on curb ramps. Provide curb ramps wherever an accessible route crosses (penetrates) a curb.
13. Curb ramps and landings shall be constructed and paid for in accordance with Item 531 "Sidewalks".
14. Place concrete at a minimum depth of 5" for ramps, flares and landings, unless otherwise directed.
15. Provide a smooth transition where the curb ramps connect to the street.
16. Curbs shown on sheet 1 within the limits of payment are considered part of the curb ramp for payment, whether it is concrete curb, gutter, or combined curb and gutter.
17. Existing features that comply with TAS may remain in place unless otherwise shown on the plans.

Detectable Warning Material

18. Curb ramps must contain a detectable warning surface that consists of raised truncated domes complying with Section 705 of the TAS. The surface must contrast visually with adjoining surfaces, including side flares. Furnish and install an approved cast-in-place dark brown or dark red detectable warning surface material adjacent to uncolored concrete, unless specified elsewhere in the plans.
19. Detectable Warning Materials must meet TxDOT Departmental Materials Specification DMS 4350 and be listed on the Material Producer List. Install products in accordance with manufacturer's specifications.
20. Detectable warning surfaces must be slip resistant and not allow water to accumulate.
21. Detectable warning surfaces shall be a minimum of 24" in depth in the direction of pedestrian travel, and extend the full width of the curb ramp or landing where the pedestrian access route enters the street.
22. Detectable warning surfaces shall be located so that the edge nearest the curb line is at the back of curb. Align the rows of domes to be perpendicular to the grade break between the ramp run and the street. Detectable warning surfaces may be curved along the corner radius.
23. Shaded areas on Sheet 1 of 4 indicate the approximate location for the detectable warning surface for each curb ramp type.

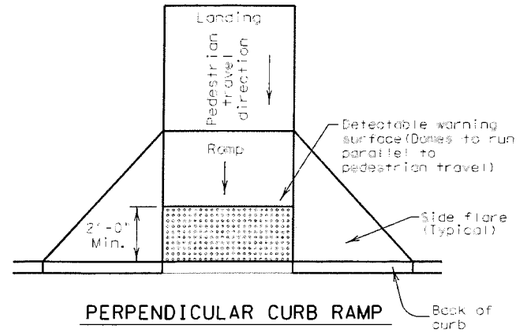

PERPENDICULAR CURB RAMP

Typical placement of detectable warning surface on sloping ramp run.

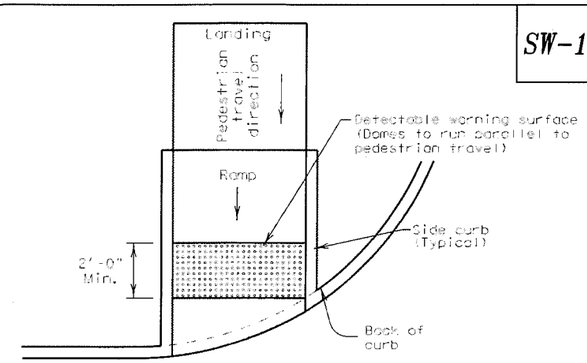

DIRECTIONAL CURB RAMP

Typical placement of detectable warning surface on sloping ramp run.

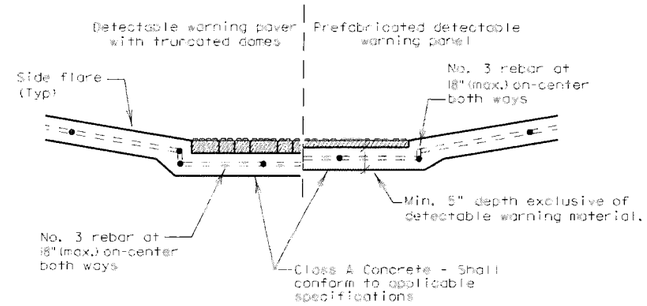

SECTION: CURB RAMP AT DETECTABLE WARNING

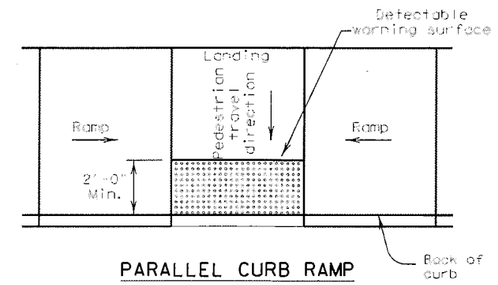

PARALLEL CURB RAMP

Typical placement of detectable warning surface on landing at street edge.

DETECTABLE WARNINGS

Detectable Warning Pavers

24. Furnish detectable warning paver units meeting all requirements of ASTM C-936, C-33. Lay in a two by two unit basket weave pattern or as directed.
25. Lay full-size units first followed by closure units consisting of at least 25 percent of a full unit. Cut detectable warning paver units using a power saw.

Sidewalks

26. Provide clear ground space at operable parts, including pedestrian push buttons. Operable parts shall be placed within one or more reach ranges specified in TAS 308.
27. Place traffic signal or illumination poles, ground boxes, controller boxes, signs, drainage facilities and other items so as not to obstruct the pedestrian access route or clear ground space.
28. Street grades and cross slopes shall be as shown elsewhere in the plans.
29. Changes in level greater than 1/4 inch are not permitted.
30. The least possible grade should be used to maximize accessibility. The running slope of sidewalks and crosswalks within the public right of way may follow the grade of the parallel roadway. Where a continuous grade greater than 5% must be provided, handrails may be desirable to improve accessibility. Handrails may also be needed to protect pedestrians from potentially hazardous conditions. If provided, handrails shall comply with TAS 505.
31. Handrail extensions shall not protrude into the usable landing area or into intersecting pedestrian routes.
32. Driveways and turnouts shall be constructed and paid for in accordance with Item "Intersections, Driveways and Turnouts". Sidewalks shall be constructed and paid for in accordance with Item, "Sidewalks".
33. Sidewalk details are shown elsewhere in the plans.

Texas Department of Transportation | Design Division Standard

PEDESTRIAN FACILITIES
CURB RAMPS
DETECTABLE WARNINGS
PED-12A

FILE: ped12a.dgn	DN: TxDOT	CK: FK	DW: TxDOT	CK: HD
© TxDOT March 2002	CONT	SECT	JOB	HIGHWAY
REVISIONS				
VP June 13, 2012	DIST	COUNTY		SHEET NO.

CITY OF WACO

STORM DRAIN DETAILS

DRAINAGE NOTES

GENERAL NOTES:

1. ALL MANHOLE WALLS, TOPS AND BOTTOMS SHALL BE MINIMUM OF 12" THICK.
2. CONCRETE SHALL HAVE A MINIMUM COMPRESSIVE STRENGTH OF 3000 POUNDS PER SQUARE INCH AT 28 DAYS UNLESS OTHERWISE NOTED. DESIGN MIX FOR 3000 POUND CONCRETE SHALL CONTAIN A MINIMUM OF 5 SACKS OF CEMENT PER CUBIC YARD.
3. SEE PLAN–PROFILE SHEETS FOR INLET SIZE, LOCATION AND ELEVATIONS.
4. ALL MATERIALS OF CONSTRUCTION SHALL CONFORM TO THE STANDARD SPECIFICATION AND SPECIAL CONDITIONS OR PROVISIONS AND LATEST REVISIONS THERETO.
5. STEEL COVER SHALL BE MINIMUM 2" FROM CENTER OF OUTSIDE LAYER OF STEEL TO FACE OF CONCRETE.
6. REINFORCED STEEL SHALL BE NEW BILLETED CONFORMING TO ASTM SPECS A615 GRADE 60 OR LATEST REVISIONS.
7. CONSTRUCTION JOINTS WILL BE PERMITTED AS SHOWN ON PLANS.
8. DIMENSIONS RELATING TO REINFORCING STEEL SHALL BE TO CENTER OF BARS.
9. WHERE GROUND WATER IS ENCOUNTERED, ALL LOOSE AND SPONGY MATERIAL WILL BE REMOVED AND 6" MINIMUM 3/4" WASHED ROCK WILL BE INSTALLED FOR BASE.
10. CITY OF WACO INLET SIZES NOTED ON PLAN & PROFILE SHEETS REFER TO DIMENSION "A". THE SIZE AND SPACING OF INLETS MUST COMPLY WITH CURRENT CITY DRAINAGE POLICIES.
11. PRE–CAST INLETS TO BE BEDDED WITH MIN. 6" OF 3/4" WASHED ROCK.
12. PLACE RING & COVER AT OUTLET PIPE.
13. REINFORCED CONCRETE PIPE SHALL BE A.S.T.M. DESIGNATION C76 CLASS III.
14. BARS SHALL BE SUPPORTED, SPACED AND ACCURATELY SECURED IN PLACE IN ACCORDANCE WITH SPECIFICATIONS FOR PLACING REINFORCEMENT AND FOR PLACING ACCESSORIES MEETING THE REQUIREMENTS OF THE A.C.I. MANUAL OF STANDARD PRACTICE FOR DETAILING REINFORCED CONCRETE STRUCTURES (A.C.I. 315–51) AND LATEST REVISIONS.
15. ALL INTERSECTING WALLS, TOPS, FLOORS, SHALL HAVE L BARS IN CORNERS LAPPED 40 BAR DIAMETERS.
16. INVERTS ON ALL MANHOLES AND INLETS SHALL BE POURED AND SHAPED WITH THE MINIMUM CONCRETE THICKNESS EQUAL TO THE THICKNESS OF THE RCP.
17. MANHOLE AND INLET COVERS SHALL HAVE THE WORDS "CITY OF WACO", "STORM DRAIN" THE "FLYING W" RAISED ON THE TOP.

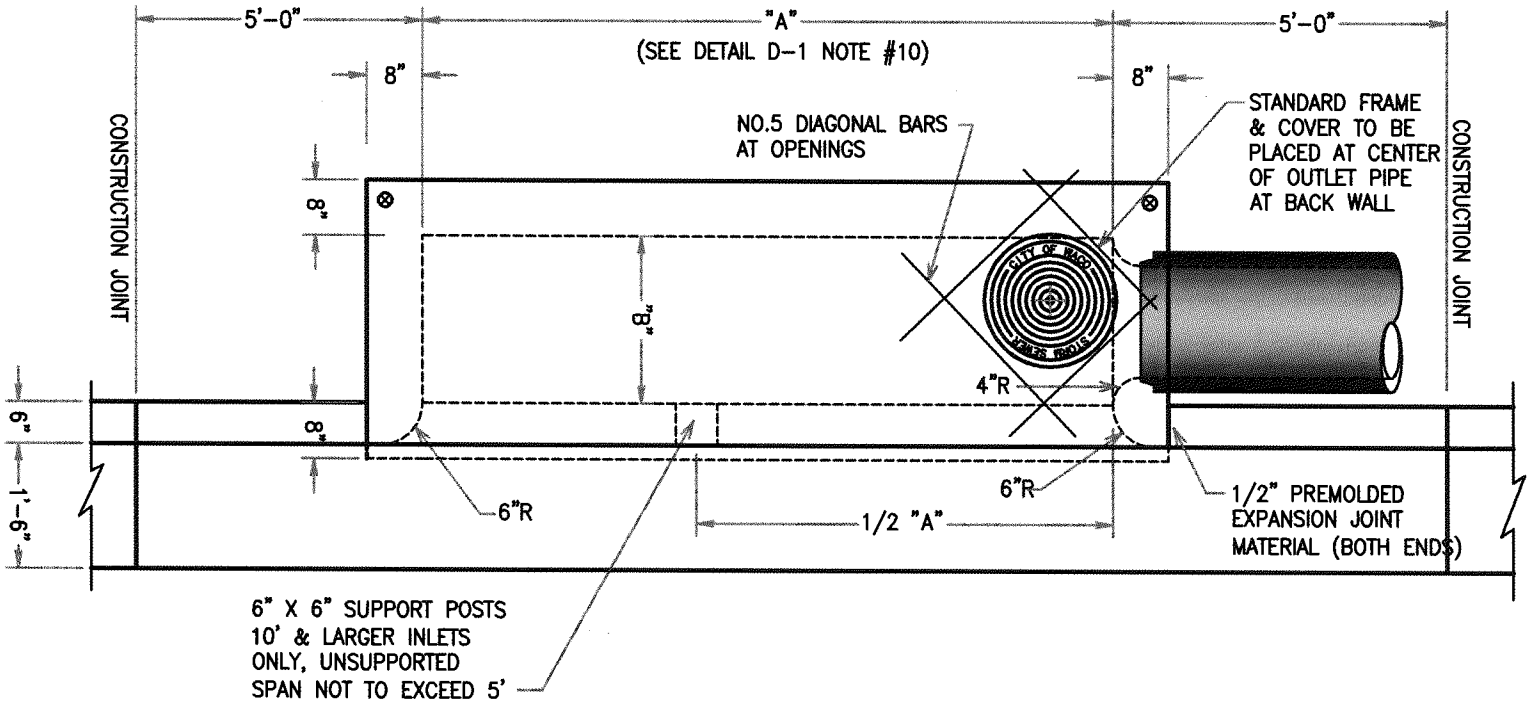

B=ID LARGEST PIPE + 1'-0", 3'-0" MINIMUM

⊗ THE CITY OF WACO SURVEY DEPARTMENT MAY SUPPLY ONE "CITY OF WACO BENCHMARK" FOR PLACEMENT IN INLET TOP IN EITHER BACK CORNER.

P L A N

NOTE:
THE CITY OF WACO BENCHMARKS SHALL BE PLACED AT A MAXIMUM SPACING OF 750'. THE CITY OF WACO ENGINEERING DEPT. WILL PROVIDE THE BENCHMARKS. THE CONTRACTOR WILL COORDINATE WITH THE ENGINEERING CONSTRUCTION INSPECTOR.

STANDARD INLET

D-2

ENGINEERING SERVICES

CITY OF WACO

NO.	COMMENTS	BY	DATE
03	FIX DIMENSION 5'-0" (RT. WINGWALL) TO PROPER LOCATION	DG	04/15/2015
02	REMOVE SEAL	DG	09/03/2014
01	ADDED NOTES ON BENCHMARKS AND DIMENSION "A".	DG	02/01/2013

REVISIONS

DATE 04/15/2015

D-3

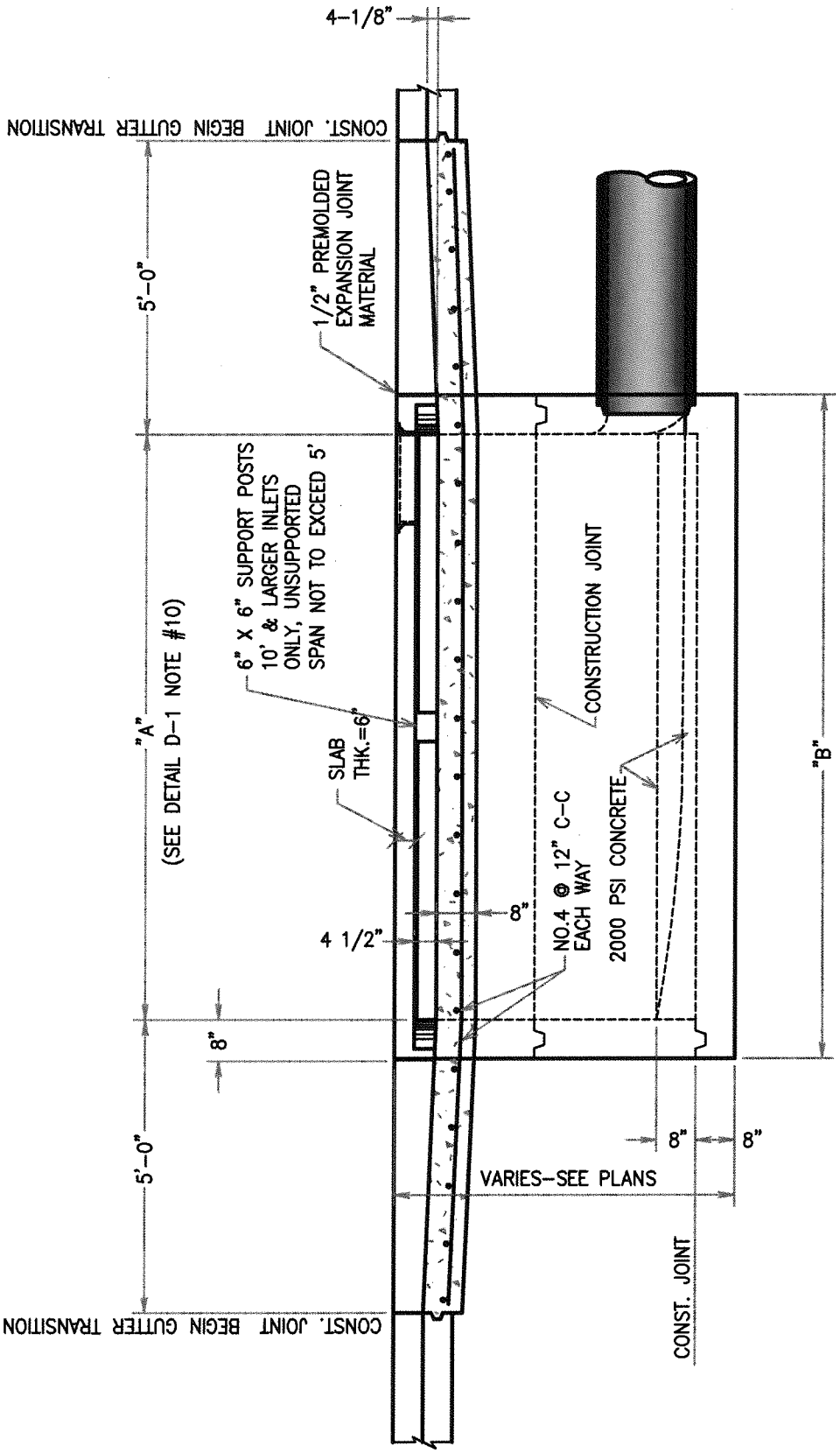

FRONT SECTION VIEW

STANDARD INLET

B=A+16"

ENGINEERING SERVICES

CITY OF WACO

REVISIONS			
NO.	COMMENTS	BY	DATE
03	REVISED NOTE ON SUPPORT POST	DG	04/15/2015
02	REMOVE SEAL	DG	09/03/2014
01	ADDED NOTE ON DIMENSION "A".	DG	02/01/2013

DATE

04/15/2015

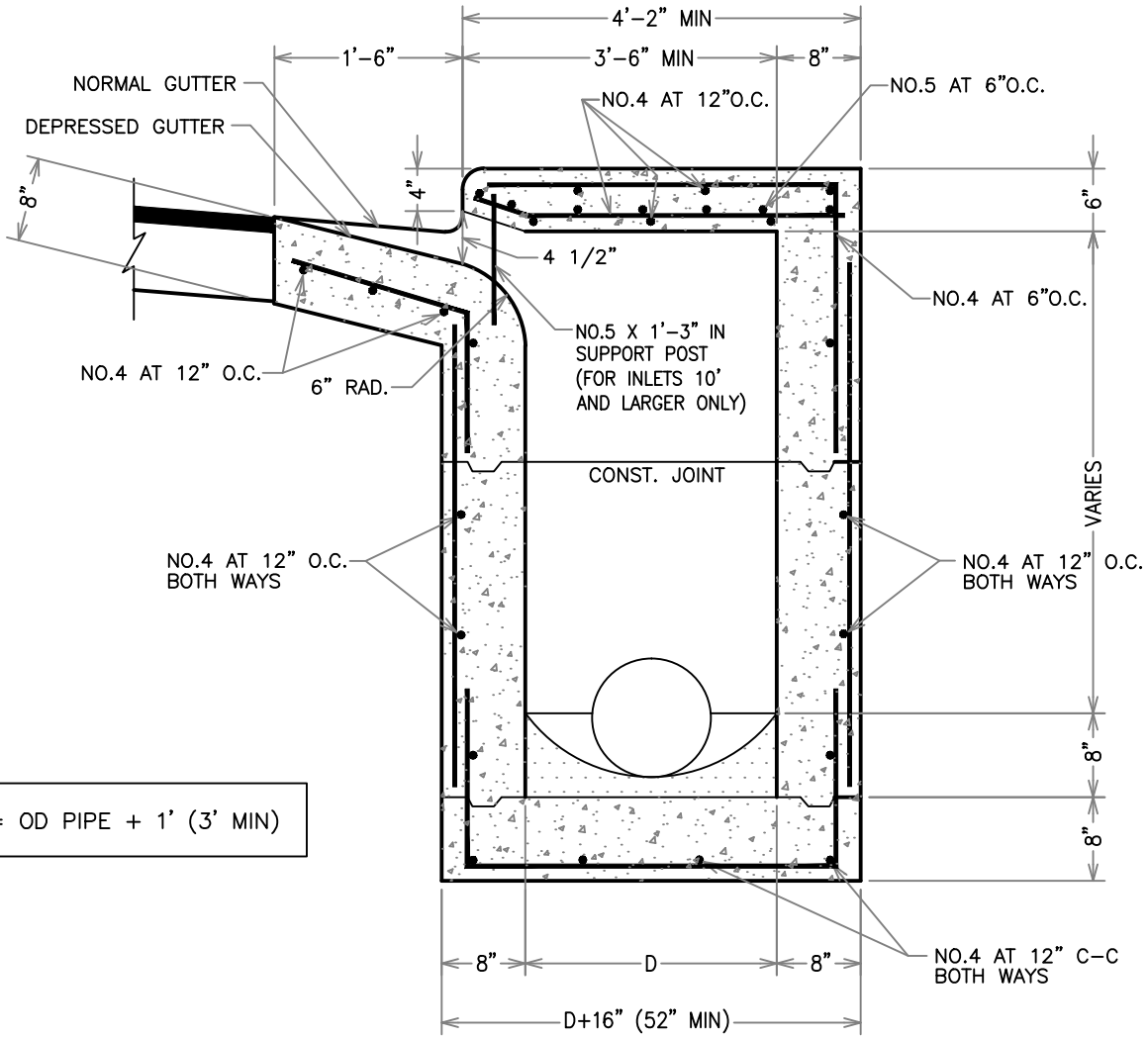

STEEL IN END WALL SAME AS STEEL IN SIDE WALL.

NOTE:
LAP ALL CORNER BARS A MINIMUM OF 40 X REBAR DIAMETER.
SUPPORT POSTS SHALL BE SPACED MAXIMUM EVERY 5'.
USE SUPPORTS POSTS FOR INLETS 10' & LARGER.

SECTIONS C-C

STANDARD INLET

WACO

ENGINEERING SERVICES

REVISIONS

NO.	COMMENTS	BY	DATE
03	REMOVE SEAL	DG	09/03/2014
02	ADD NOTES ON SUPPORT POSTS/MAKE CORRECTIONS TO REBAR	DG	12/15/2011
01	CLARIFIED INLET OPENING	DG	09/09/2011

BOOK PAGE NUMBER
0000

DATE
09/03/2014

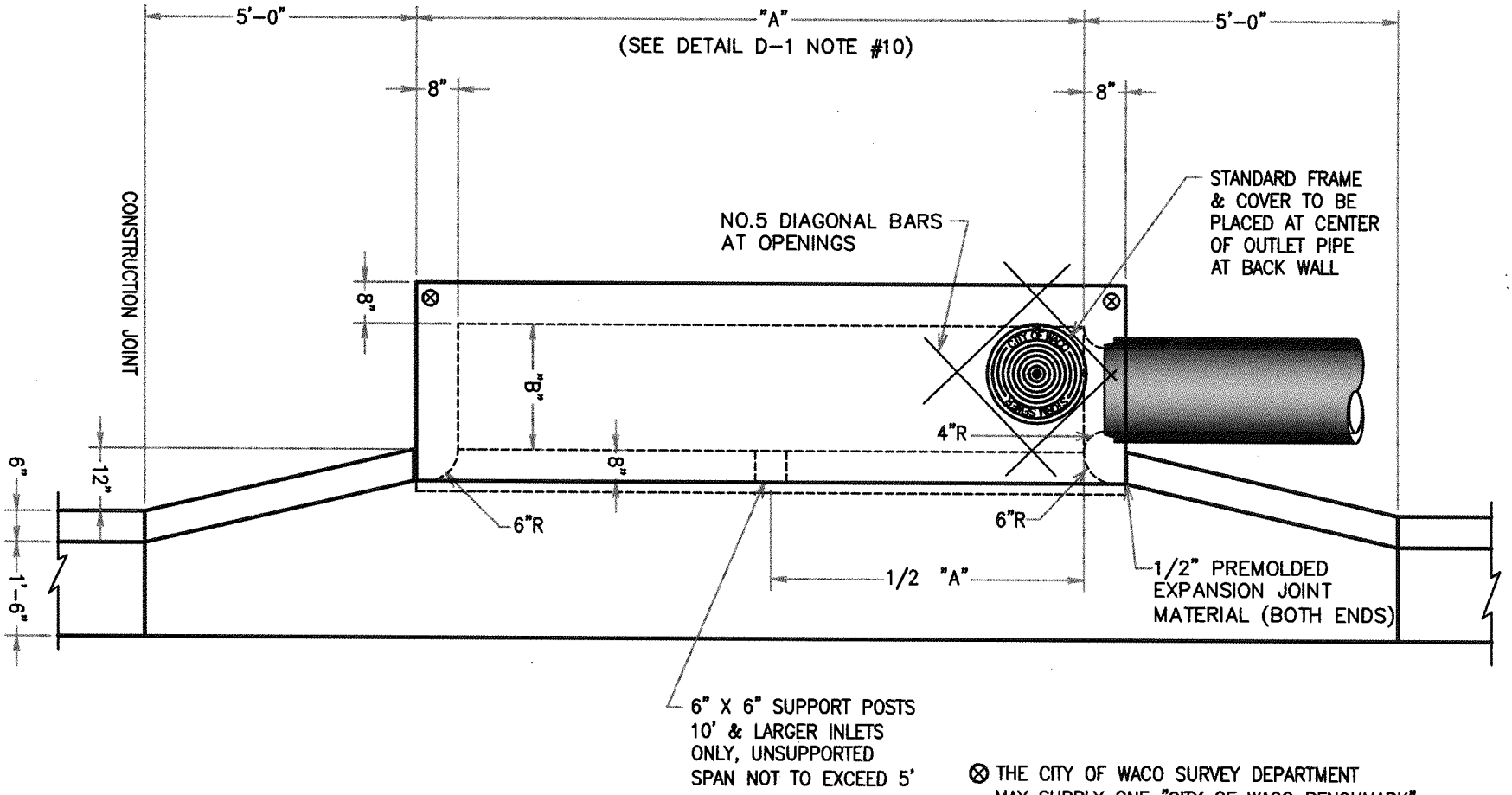

B=ID OF LARGEST PIPE + 1' 0", 3'-0" MINIMUM

⊗ THE CITY OF WACO SURVEY DEPARTMENT MAY SUPPLY ONE "CITY OF WACO BENCHMARK" FOR PLACEMENT IN INLET TOP IN EITHER BACK CORNER.

NOTE:
THE CITY OF WACO BENCHMARKS SHALL BE PLACED AT A MAXIMUM SPACING OF 750'. THE CITY OF WACO ENGINEERING DEPT. WILL PROVIDE THE BENCHMARKS. THE CONTRACTOR WILL COORDINATE WITH THE ENGINEERING CONSTRUCTION INSPECTOR.

PLAN

STANDARD RECESSED INLET

D-5

ENGINEERING SERVICES

CITY OF WACO

REVISIONS

NO.	COMMENTS	BY	DATE
03	FIXED DIMENSION 1/2 "A" TO PROPER LOCATION	DG	04/15/2015
02	REMOVE SEAL	DG	09/03/2014
01	ADDED NOTES ON BENCHMARKS AND DIMENSION "A".	DG	02/01/2013

DATE 04/15/2015

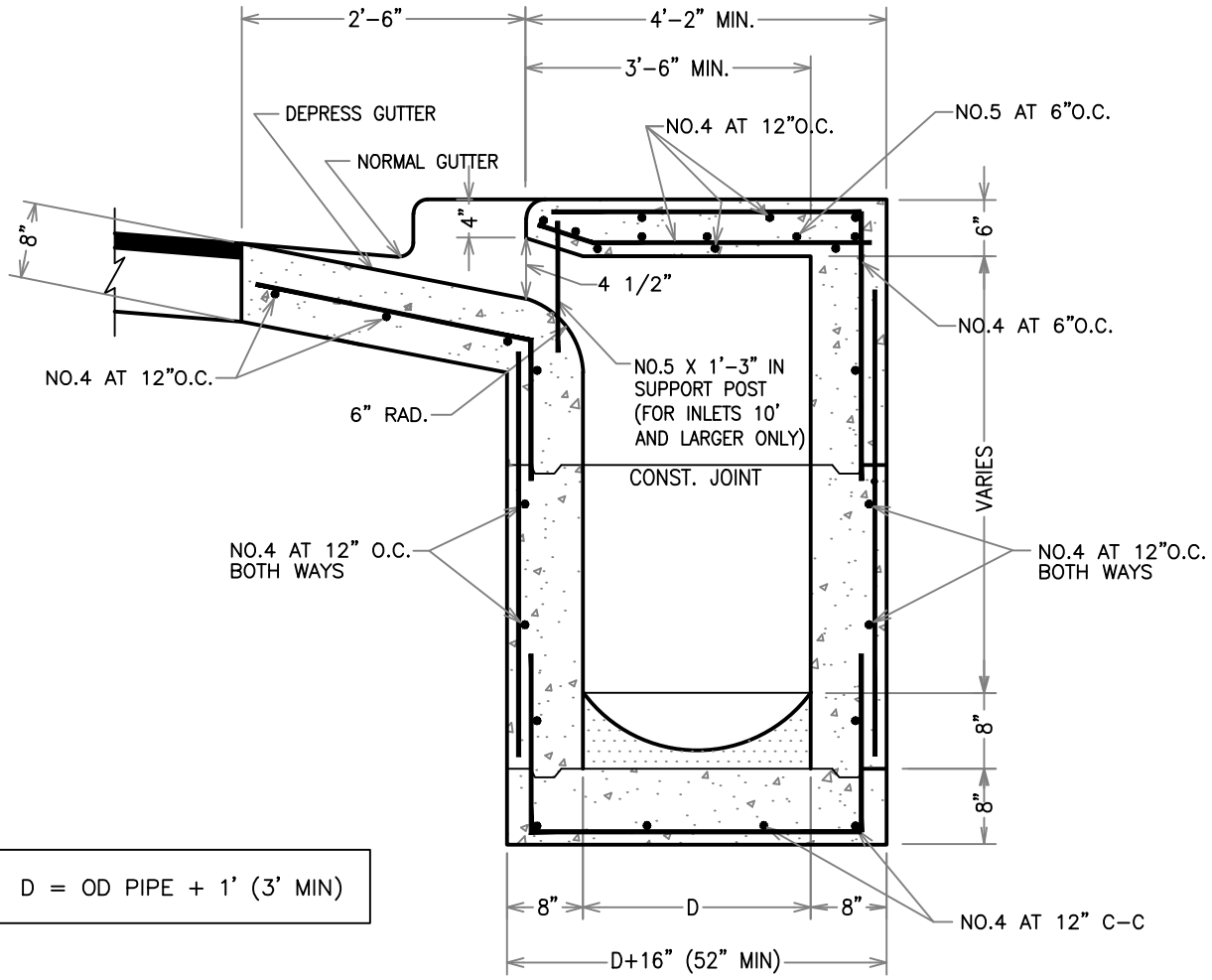

STEEL IN END WALL SAME AS STEEL IN SIDE WALL.

NOTE:
LAP ALL CORNER BARS A MINIMUM OF 40 X REBAR DIAMETER.
SUPPORT POSTS SHALL BE SPACED MAXIMUM EVERY 5'.
USE SUPPORTS POSTS FOR INLETS 10' & LARGER.

SECTION

STANDARD RECESSED INLET

WACO

ENGINEERING SERVICES

REVISIONS

NO.	COMMENTS	BY	DATE
03	REMOVE SEAL	DG	09/03/2014
02	ADD NOTES ON SUPPORT POSTS/MAKE CORRECTIONS TO REBAR	DG	12/15/2011
01	CLARIFIED INLET OPENING	DG	09/09/2011

BOOK PAGE NUMBER 0000

DATE 09/03/2014

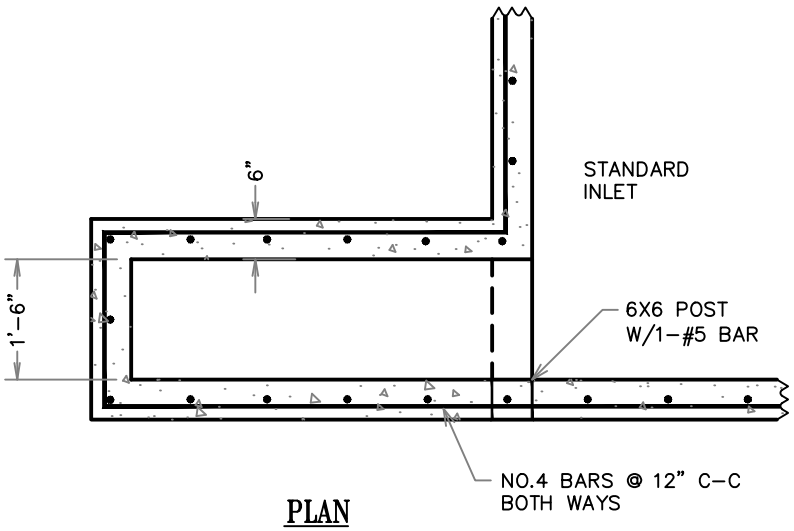

PLAN

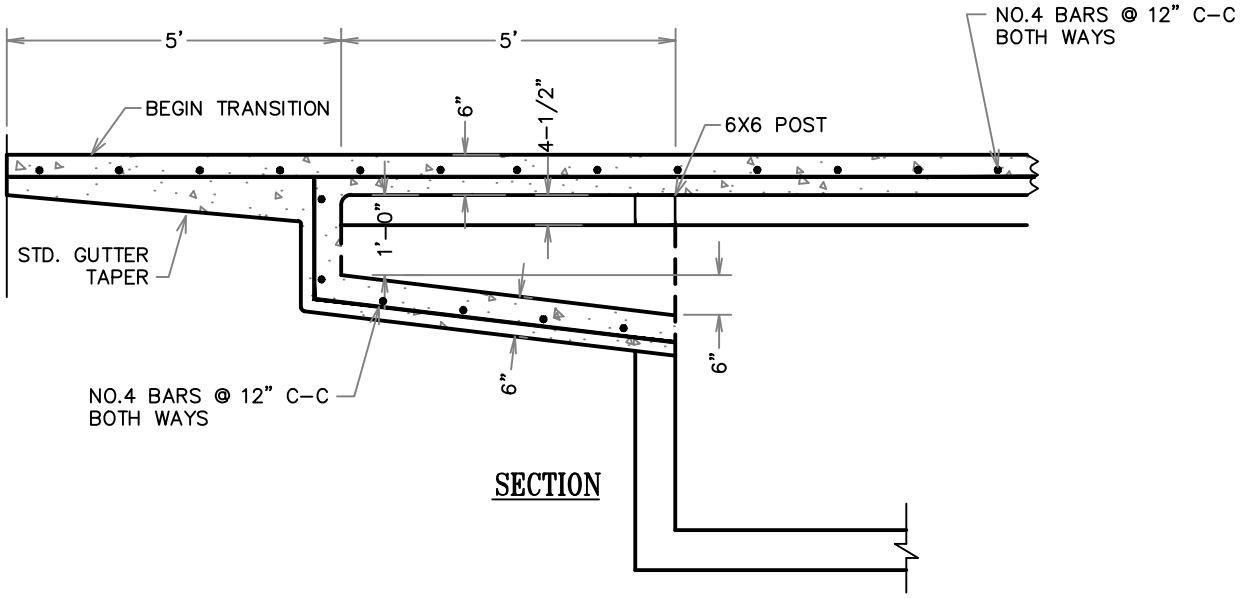

SECTION

STANDARD INLET TROUGH

WACO

ENGINEERING
SERVICES

REVISIONS

NO.	COMMENTS	BY	DATE
1	REMOVE SEAL	DG	09/03/2014

BOOK PAGE NUMBER
0000

DATE
09/03/2014

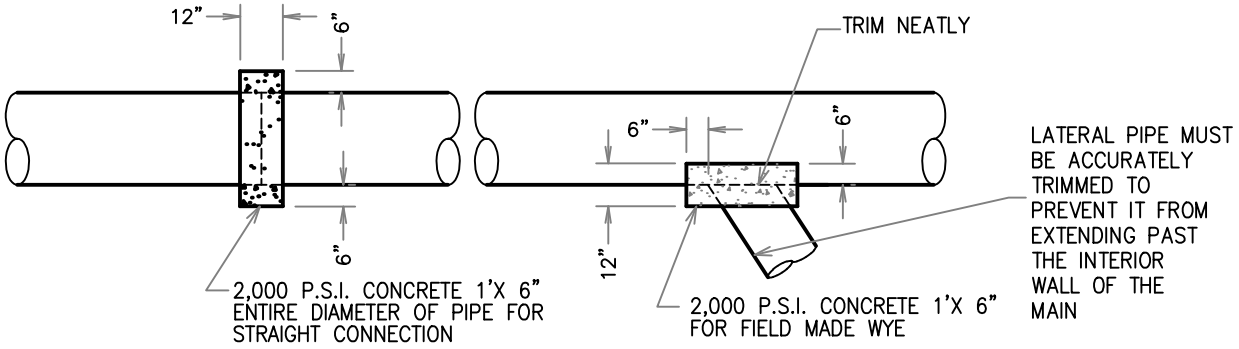

NOTE: CONCRETE TO BE PLACED COMPLETELY AROUND PIPE.

CONCRETE COLLAR FOR STORM DRAIN PIPE FIELD CONNECTION

WACO

ENGINEERING SERVICES

REVISIONS

NO.	COMMENTS	BY	DATE
1	REMOVE SEAL	DG	09/03/2014

BOOK PAGE NUMBER 0000

DATE 09/03/2014

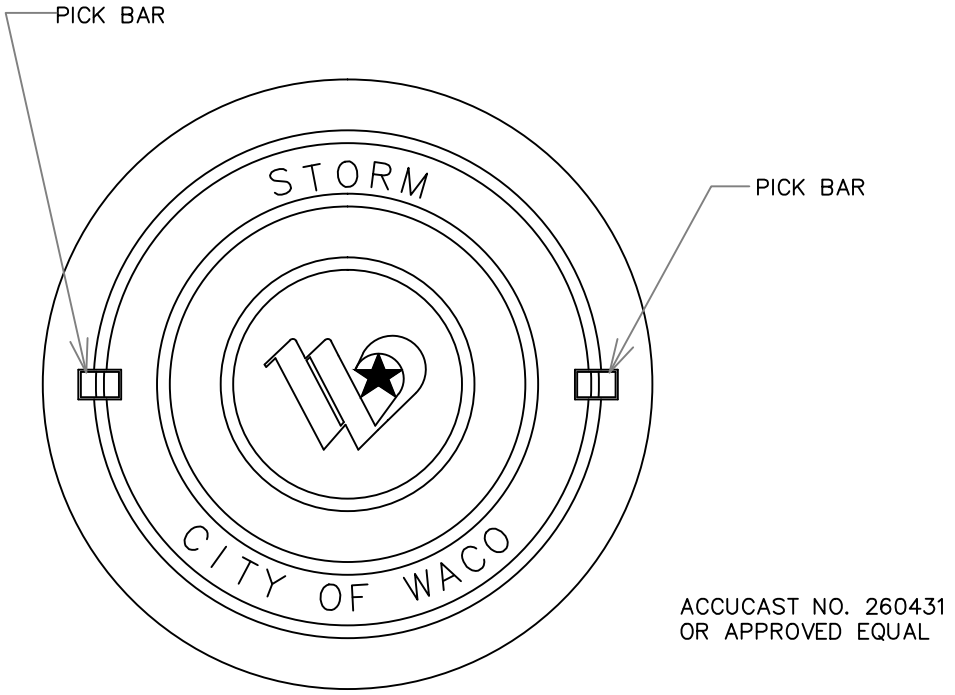

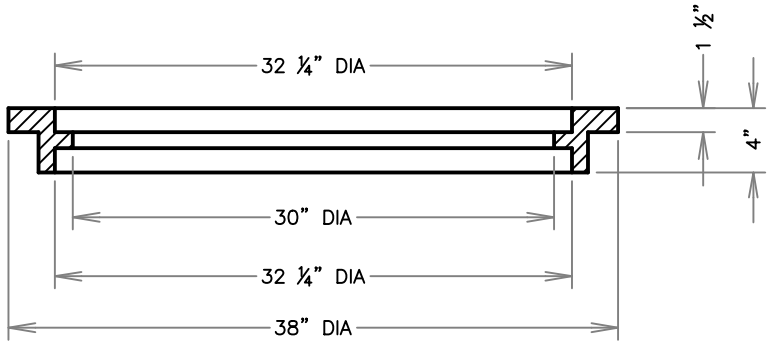

INLET RING AND COVER

(NO SCALE)

WACO

ENGINEERING SERVICES

REVISIONS			
NO.	COMMENTS	BY	DATE
1	REMOVE SEAL	DG	09/03/2014

BOOK PAGE NUMBER 0000

DATE 09/03/2014

D-10

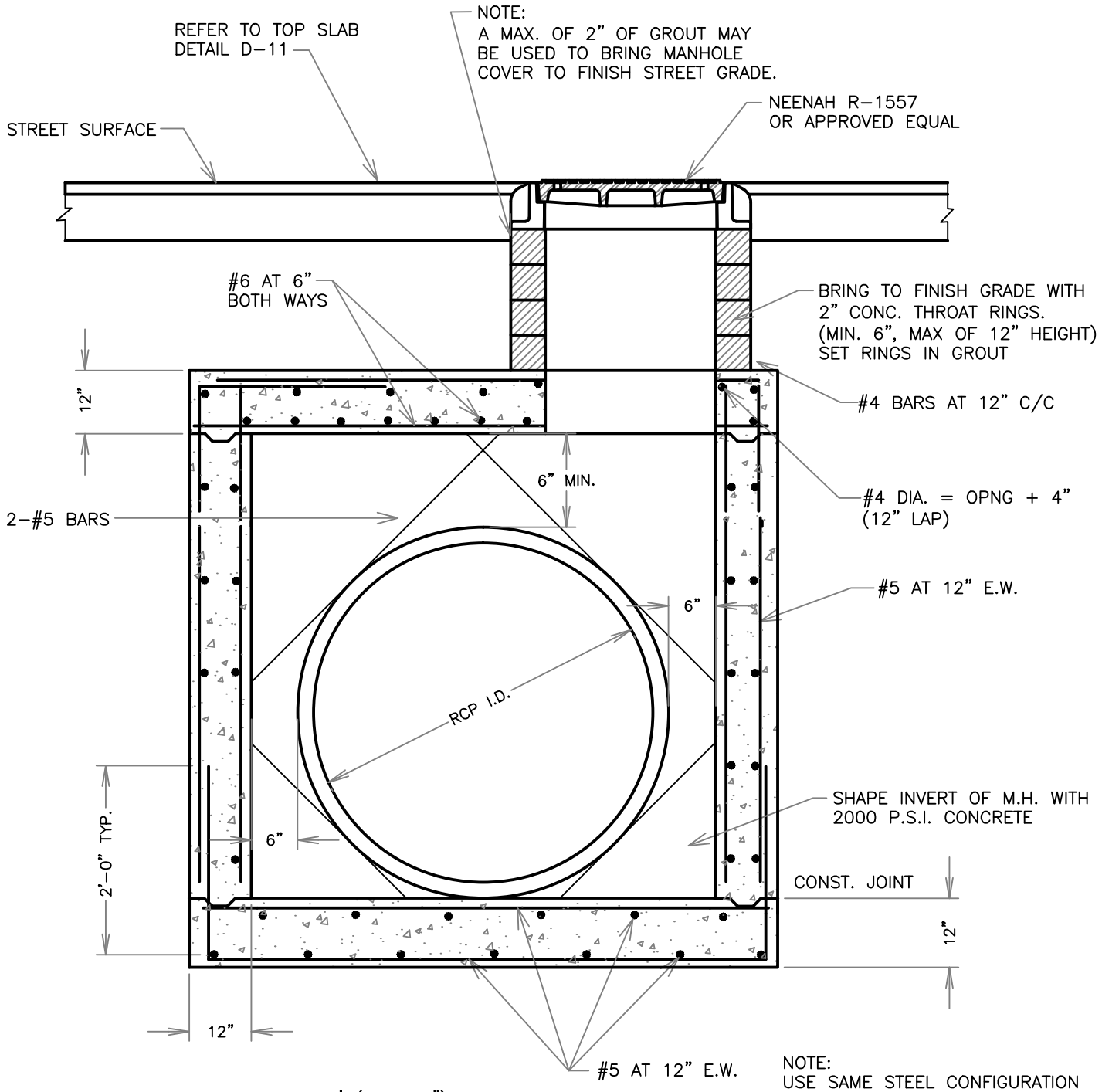

INSIDE WIDTH=OD PIPE + 1' (MIN. 48")
OUTSIDE WIDTH=INSIDE WIDTH + 2'

NOTE:
USE SAME STEEL CONFIGURATION IN ALL WALLS. SET MANHOLE AT CORNER NEAREST OUTLET PIPE BEARING ON TWO WALL.

STANDARD STORM SEWER MANHOLE SECTION

WACO

ENGINEERING SERVICES

REVISIONS

NO.	COMMENTS	BY	DATE
02	REMOVE SEAL	DG	09/03/2014
01	ADDED MORE DIMENSIONS AND TOLERANCES.	DG	02/01/2013

BOOK PAGE NUMBER 0000

DATE 09/03/2014

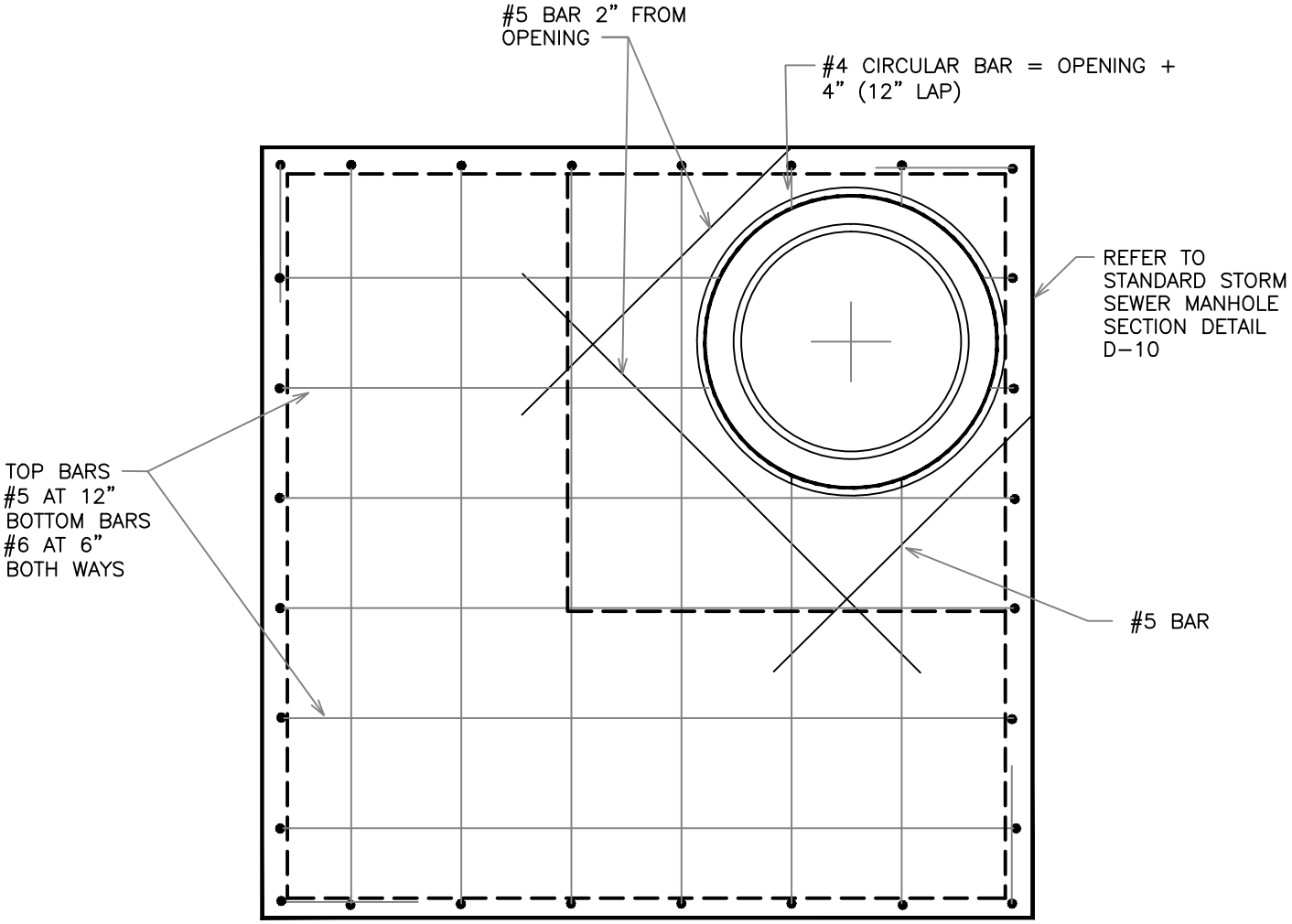

TOP SLAB DETAIL

STANDARD STORM SEWER MANHOLE

WACO

ENGINEERING SERVICES

REVISIONS			
NO.	COMMENTS	BY	DATE
1	REMOVE SEAL	DG	09/03/2014

BOOK PAGE NUMBER 0000

DATE 09/03/2014

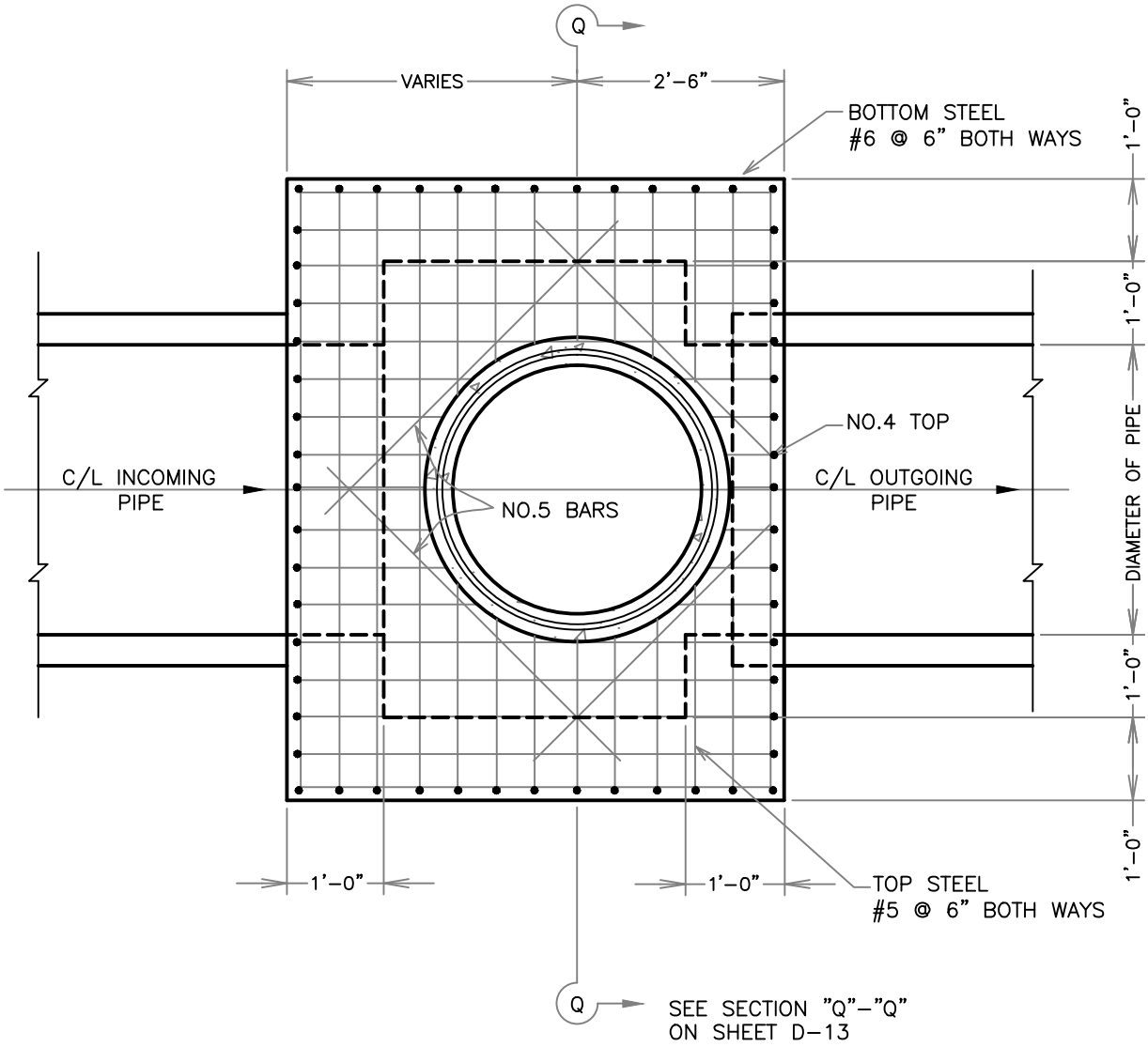

TOP SLAB DEEP STORM SEWER MANHOLE

WACO

ENGINEERING SERVICES

REVISIONS

NO.	COMMENTS	BY	DATE
1	REMOVE SEAL	DG	09/03/2014

BOOK PAGE NUMBER
0000

DATE
09/03/2014

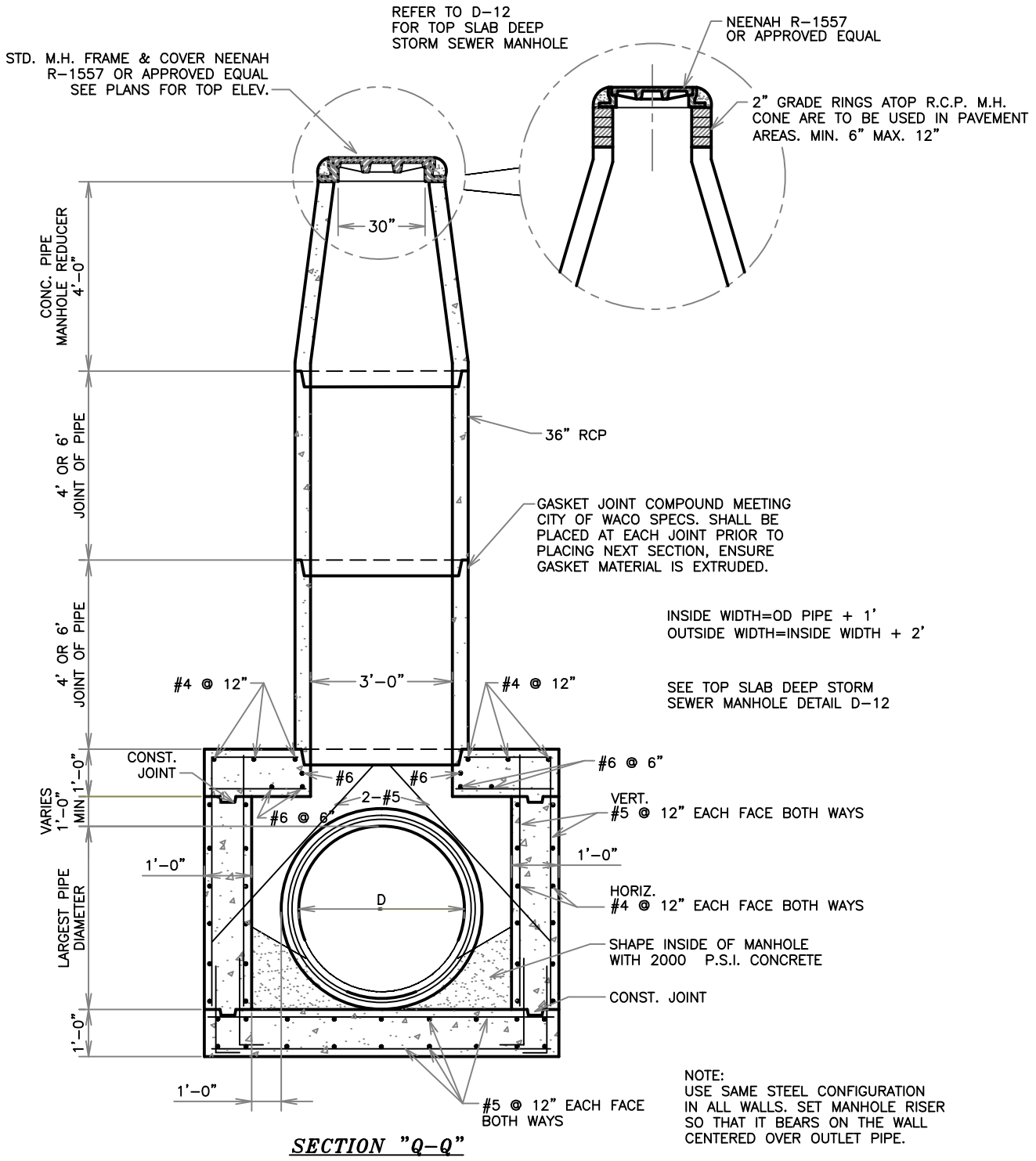

SECTION "Q-Q"

DEEP STORM SEWER MANHOLE

WACO

ENGINEERING SERVICES

REVISIONS

NO.	COMMENTS	BY	DATE
1	REMOVE SEAL	DG	09/03/2014

BOOK PAGE NUMBER
0000

DATE
09/03/2014

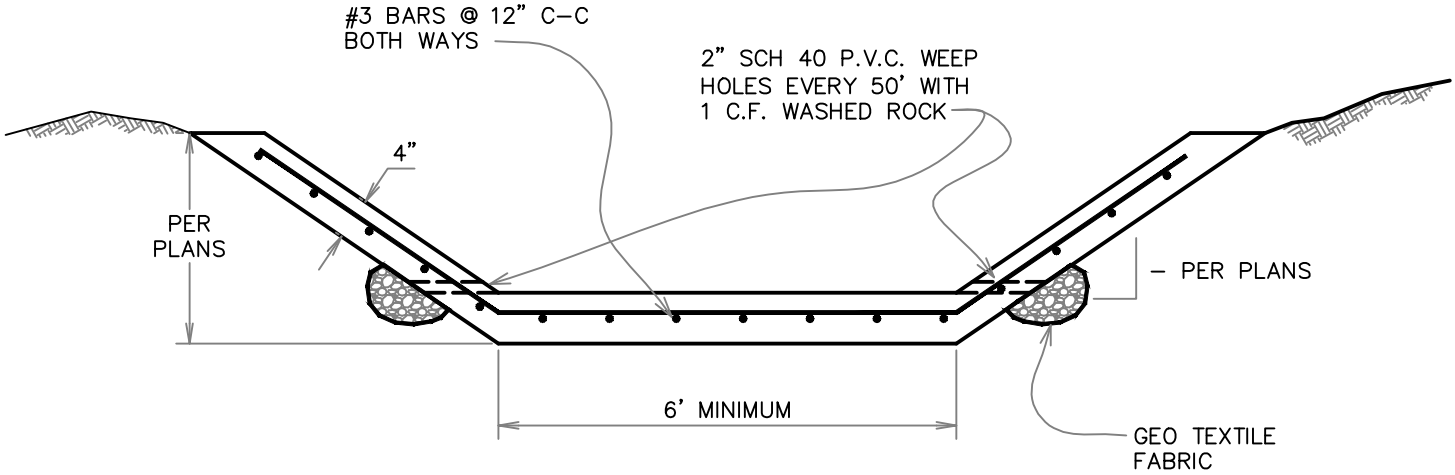

NOTES:

1. CHANNEL WALLS WILL BE DESIGNED TO SUIT PROJECT SPECIFIC SITE.
2. CONCRETE MUST BE PLACED TO ENSURE POSITIVE DRAINAGE SLOPE.
3. PLEASE REFER TO DETAIL G-10 FOR GENERAL CONCRETE NOTES.

CONCRETE LINED CHANNEL

WACO

ENGINEERING SERVICES

REVISIONS

NO.	COMMENTS	BY	DATE
2	REMOVE SEAL	DG	09/03/2014
1	ADDED NOTES.	DG	03/22/2013

BOOK PAGE NUMBER
0000

DATE
09/03/2014

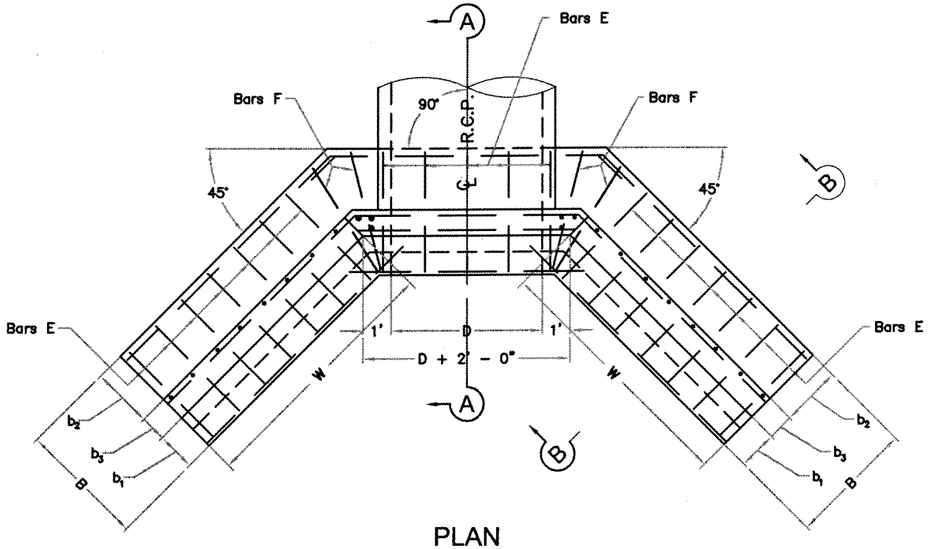

PLAN

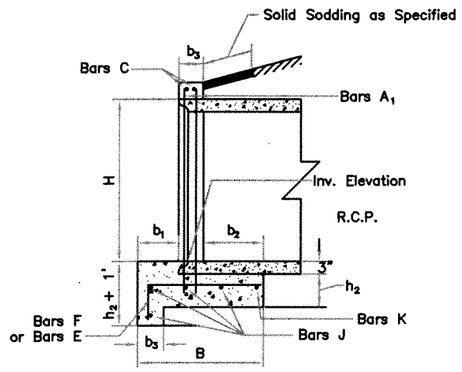

SECTION A-A

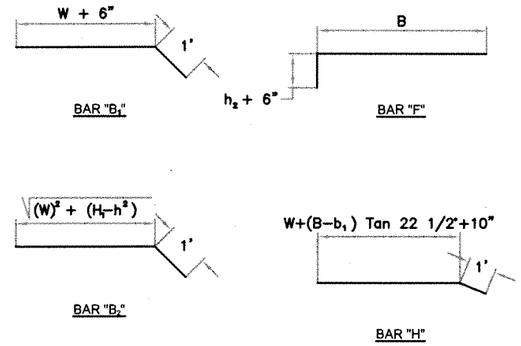

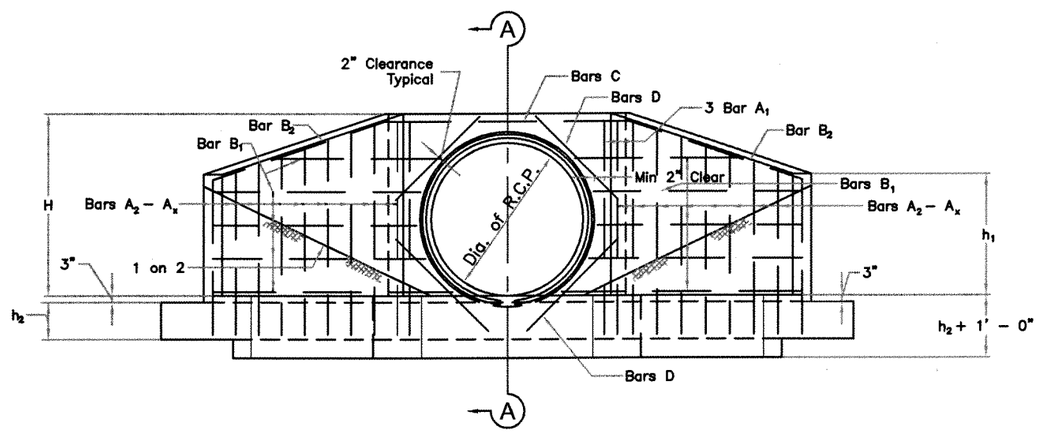

ELEVATION

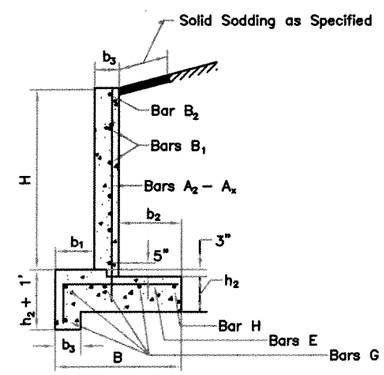

SECTION B-B

STANDARD FLARED REINFORCED CONCRETE HEADWALL

Dia. of Pipe	DIMENSIONS								BARS A_1 6 BARS			BARS A_2 – A_x					BARS B_1 #4 @ 12"±			BARS B_2 2 – #4		BARS C 2 – #4		BARS D 6 – #5		BARS E @ 12"				BARS F 4 BARS			BARS G 8 – #4		BARS H 2 – #4		BARS J 4 –#4		BARS K 1 – #4		Conc. C.Y.	Steel Lbs.
	W	B	b_1	b_2	b_3	H	h_1	h_2	Size	Lgth.	Wt	No.	Size	Spac.	Av. Lgth.	Wt.	No.	Lgth.	Wt.	Lgth.	Wt.	Lgth.	Wt.	Lgth.	Wt.	No.	Size	Lgth.	Wt.	Size	Lgth.	Wt.	Lgth.	Wt.	Lgth.	Wt.	Lgth.	Wt.	Lgth.	Wt.		
18"	2'-1"	3'-5"	1'-6"	1'-3"	8"	2'-4"	1'-11"	6"	4	3'-2"	13	6	4	12"	3'-0"	12	6	2'-7"	10	3'-2"	4	3'-9"	5	1'-0"	6	6	4	4'-1'	16	4	4'-5"	12	3'-1"	16	2'-0"	3	4'-6"	12	5'-6"	4	1.7	113
24"	3'-0"	3'-5"	1'-6"	1'-3"	8"	2'-11"	2'-3"	6"	4	3'-4"	15	8	4	12"	3'-4"	18	6	3'-6"	14	4'-1"	5	4'-3"	6	1'-6"	9	8	4	4'-1"	22	4	4'-5"	12	4'-0"	21	2'-11"	4	5'-0"	13	6'-0"	4	2.5	143
30"	3'-11"	3'-8"	1'-6"	1'-6"	8"	3'-5¼"	2'-7"	1'-0"	4	4'-10"	20	10	4	11"	4'-4"	29	6	4'-5"	18	5'-0"	7	4'-9"	6	2'-0"	13	10	4	4'-10"	32	4	5'-2"	14	4'-11"	26	3'-10"	5	5'-6"	15	6'-7"	4	4.0	189
36"	4'-10"	3'-8"	1'-6"	1'-6"	8"	4'-0"	2'-10"	1'-0"	4	5'-4"	22	12	4	11"	4'-9"	38	6	5'-4"	21	6'-0"	8	5'-3"	7	2'-6"	16	12	4	4'-10"	39	4	5'-2"	14	5'-10"	31	4'-9"	6	6'-0"	16	7'-1"	5	5.2	223
42"	5'-9"	3'-11"	1'-6"	1'-9"	8"	4'-6¾"	3'-2"	1'-3"	5	6'-2"	39	12	5	12"	5'-6"	67	8	6'-3"	33	6'-11"	9	5'-9"	8	3'-0"	19	12	4	5'-4"	43	4	5'-8"	15	6'-9"	36	5'-8"	8	6'-6"	17	7'-8"	5	6.8	299
48"	6'-8"	3'-11"	1'-6"	1'-9"	8"	5'-1"	3'-6"	1'-3"	5	6'-8"	42	14	5	11"	5'-11"	88	8	7'-2"	38	7'-10"	10	6'-3"	8	3'-6"	22	14	4	5'-4'	50	4	5'-8"	15	7'-8"	41	6'-7"	9	7'-0"	19	8'-2"	5	8.0	347
54"	7'-7"	4'-2"	1'-6"	2'-0"	8"	5'-7¾"	3'-10"	1'-6"	5	7'-6"	47	18	5	10"	6'-7"	124	8	8'-1"	43	8'-10"	12	6'-9"	9	4'-0"	25	16	4	5'-10"	97	5	6'-2"	26	8'-7'	46	7'-6"	10	7'-6"	20	8'-10"	6	10.2	465
60"	8'-6"	4'-6"	1'-6"	2'-0"	1'-0"	6'-2"	4'-2"	1'-6"	5	8'-0"	50	18	5	12"	7'-0"	132	10	9'-0"	60	9'-9"	13	7'-3"	10	4'-6"	28	18	5	6'-2"	116	5	6'-6"	27	9'-6"	51	8'-4"	11	8'-0"	21	9'-6"	6	13.5	525
66"	9'-5"	4'-9"	1'-6"	2'-3"	1'-0"	6'-8¾"	4'-6"	1'-6"	5	8'-6"	54	20	5	12'	7'-5"	155	10	9'-11"	66	10'-8"	14	7'-9"	10	5'-0"	31	20	5	6'-5"	134	5	6'-9"	28	10'-5"	56	9'-3"	12	8'-6"	23	10'-1"	7	15.8	590
72"	10'-4"	5'-0"	1'-6"	2'-6"	1'-0"	7'-3"	4'-10"	1'-6"	5	9'-1"	57	22	5	12"	8'-0"	184	12	10'-10"	87	11'-7"	15	8'-3"	11	5'-6"	34	22	5	6'-8"	153	5	7'-0"	29	11'-4"	61	10'-2"	14	9'-0"	24	10'-8"	7	18.0	676
78"	11'-3"	5'-3"	1'-6"	2'-9"	1'-0"	7'-9¾"	5'-2"	1'-6"	6	9'-8"	87	24	6	12"	8'-4"	300	12	11'-9"	94	12'-6"	17	8'-9"	12	6'-0"	38	24	5	6'-11"	173	5	7'-3"	30	12'-3"	66	11'-1"	15	9'-6"	25	11'-3"	8	20.3	865
84"	12'-2"	5'-6"	1'-6"	3'-0"	1'-0"	8'-4"	5'-6"	1'-6"	6	10'-2"	92	28	6	10"	8'-9"	368	12	12'-8"	102	13'-6"	18	9'-3"	12	6'-6"	41	26	5	7'-2"	194	5	7'-6"	31	13'-2"	71	12'-0"	16	10'-0"	27	11'-10"	8	22.8	980

GENERAL NOTES

1. QUANTITIES GIVEN ARE FOR ONE HEADWALL & ARE ESTIMATED QUANTITIES ONLY.
2. STEEL COVER TO BE 2" FROM CENTER OF OUTSIDE LAYER TO FACE CONCRETE.
3. CONSTRUCTION JOINTS WILL BE PERMITTED AS SHOWN ON THE PLANS.
4. ALL DIMENSIONS RELATING TO REINFORCING STEEL SHALL BE TO CENTER OF BARS.
5. HEADWALLS ARE DIMENSIONED FOR 1 ON 3 EMBANKMENT SLOPE. IF THE EMBANKMENT SLOPE IS OTHER THAN 1 ON 3, IT SHALL BE WARPED TO FIT THE HEADWALLS.
6. CONCRETE SHALL HAVE A MINIMUM COMPRESSIVE STRENGTH OF 3,000 POUNDS PER SQUARE INCH AT 28 DAYS UNLESS OTHER WISE NOTED. DESIGN MIX FOR 3,000 POUND CONCRETE SHALL CONTAIN A MINIMUM OF 5 SACKS OF CEMENT PER CUBIC YARD.
7. BARS SHALL BE SUPPORTED, SPACED & ACCURATELY SECURED IN PLACE IN ACCORDANCE WITH SPECIFICATION FOR PLACING REINFORCEMENT AND FOR PLACING ACCESSORIES MEETING THE REQUIREMENTS OF THE "A.C.I. MANUAL OF STANDARD PRACTICE FOR DETAILING REINFORCED CONCRETE STRUCTURES (A.C.I. 315 – 51)" & LATEST REVISION.
8. FOR ODD DIAMETERS OF PIPE, USE THE NEXT LARGEST HEAD–WALL.
9. REINFORCING STEEL SHALL BE DEFORMED NEW BILLET INTERMEDIATE GRADE, CONFORMING TO A.S.T.M. SPECIFICATION A–15–56T & A–305–56T OR LATEST REVISIONS THERETO.

ENGINEERING SERVICES

CITY OF WACO

NO.	REVISIONS COMMENTS	BY	DATE
2	ILLEGIBLE COPY MADE INTO DRAWING	DG	04/15/2015
1	REMOVE SEAL	DG	09/03/2014

DATE 04/15/2015

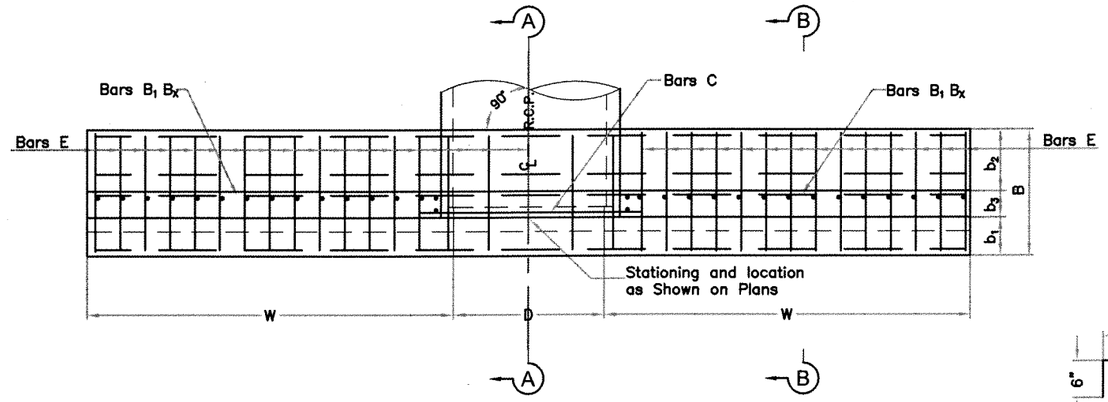

PLAN

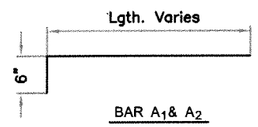

BAR A_1& A_2

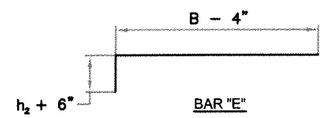

BAR "E"

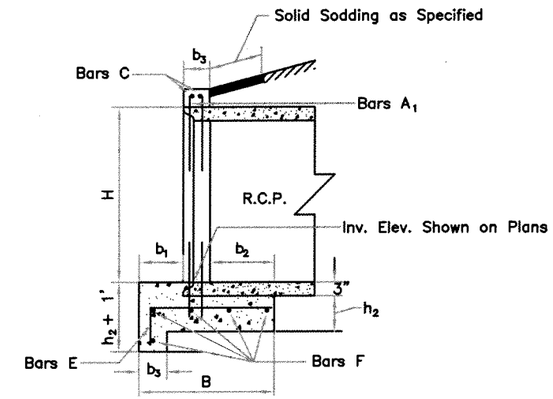

SECTION A-A

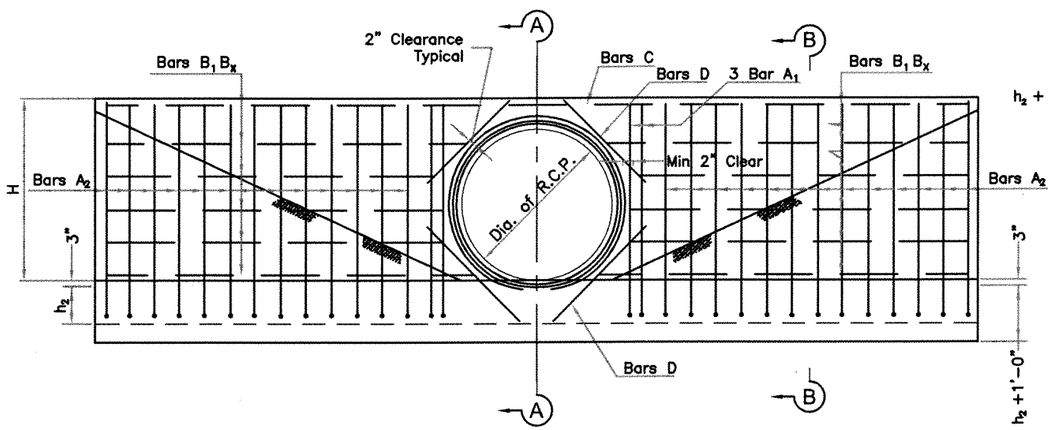

ELEVATION

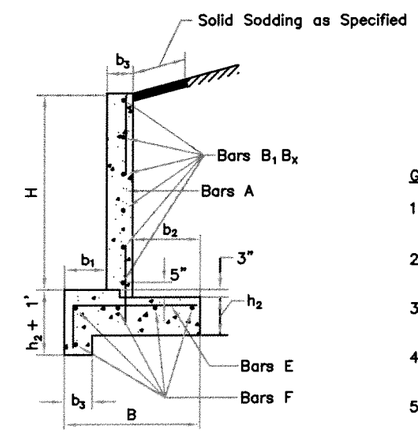

SECTION B-B

STANDARD PARALLEL REINF. CONC. HEADWALL

Dia. of Pipe	DIMENSIONS							BARS A_1 6 BARS			BARS A_2					BARS B_1 – B_x #4 @ 12"			BARS C 2 – #4		BARS D 4 – #5		BARS E @ 12"				BARS F 5 – #4			Steel Lbs.	Conc. C.Y.
	W	B	b_1	b_2	b_3	H	h_2	Size	Lgth.	Wt	No.	Size	Space	Lgth.	Wt.	No.	Av. Lgth.	Av. Wt.	Lgth.	Wt.	Lgth.	Wt.	No.	Size	Lgth.	Wt.	No.	Lgth.	Wt.		
18"	4'–8"	3'–5"	1'–6"	1'–3"	8"	2'–4"	8"	4	2'–10"	10.0	8	4	12"	2'–10"	13.4	6	4'–0"	16.0	3'–6"	4.7	1'–0"	4.2	10	4	4'–3"	28.4	5	9'–2"	30.6	107.3	1.55
24"	6'–0"	3'–5"	1'–6"	1'–3"	8"	3'–0"	8"	4	3'–6"	14.0	12	4	12"	3'–6"	28.1	8	6'–0"	32.1	4'–0"	5.3	1'–6"	6.3	15	4	4'–3"	42.6	5	13'–8"	45.7	174.1	2.60
30"	7'–0"	3'–8"	1'–6"	1'–6"	8"	3'–6"	1'–0"	4	4'–4"	17.4	14	4	12"	4'–4"	40.5	10	7'–0"	46.8	4'–6"	6.0	2'–0"	8.3	17	4	4'–10"	54.8	5	16'–2"	54.0	227.8	4.08
36"	8'–0"	3'–8"	1'–6"	1'–6"	8"	4'–0"	1'–0"	5	4'–10"	30.2	16	4	12"	4'–10"	51.6	10	8'–0"	53.4	5'–0"	6.7	2'–6"	10.4	20	4	4'–10"	64.5	5	18'–8"	62.4	279.2	4.88
42"	9'–2"	3'–11"	1'–6"	1'–9"	8"	4'–7"	1'–3"	5	5'–8"	35.5	18	5	12"	5'–8"	106.5	12	9'–2"	75.1	5'–6"	7.3	3'–0"	12.5	22	4	5'–4"	78.3	5	21'–4"	71.2	386.4	6.78
48"	10'–2"	3'–11"	1'–6"	1'–9"	8"	5'–1"	1'–3"	5	6'–2"	38.6	20	5	12"	6'–2"	128.7	12	10'–2"	81.5	6'–0"	8.0	3'–6"	14.6	25	4	5'–4"	89.0	5	24'–0"	80.2	440.6	7.89
54"	11'–4"	4'–2"	1'–6"	2'–0"	8"	5'–8"	1'–6"	5	7'–0"	43.8	22	5	12"	7'–0"	160.6	14	11'–4"	106.0	6'–6"	8.7	4'–0"	16.7	28	4	5'–10"	109.0	5	26'–10"	89.6	534.4	10.49
60"	12'–4"	4'–6"	1'–6"	2'–0"	1'–0"	6'–2"	1'–6"	5	7'–6"	46.9	24	5	12"	7'–6"	187.7	14	12'–4"	115.3	7'–0"	9.4	4'–6"	18.7	30	5	6'–2"	193.1	5	29'–4"	98.0	669.1	14.51
66"	13'–6"	4'–9"	1'–6"	2'–3"	1'–0"	6'–9"	1'–6"	5	8'–1"	50.6	26	5	12'	8'–1"	219.1	16	13'–6"	144.3	7'–6"	10.0	5'–0"	20.9	32	5	6'–5"	214.3	5	32'–2"	107.4	766.6	16.95
72"	14'–6"	5'–0"	1'–6"	2'–6"	1'–0"	7'–3"	1'–6"	5	8'–7"	53.7	28	5	12"	8'–1"	250.6	16	14'–6"	155.0	8'–0"	10.7	5'–6"	22.9	36	5	6'–8"	250.5	6	34'–8"	115.8	859.2	18.92
78"	15'–8"	5'–3"	1'–6"	2'–9"	1'–0"	7'–10"	1'–6"	5	9'–2"	57.4	30	5	12"	9'–2"	286.9	18	15'–8"	188.4	8'–6"	11.4	6'–0"	25.0	38	5	6'–11"	274.3	6	37'–6"	125.3	968.7	22.02
84"	16'–8"	5'–6"	1'–6"	3'–0"	1'–0"	8'–4"	1'–6"	5	9'–8"	60.5	32	5	12"	9'–8"	322.7	18	16'–8"	200.4	9'–0"	17.0	6'–6"	27.1	41	5	7'–2"	306.6	6	40'–0"	133.6	1062.9	24.60

GENERAL NOTES

1. QUANTITIES GIVEN ARE FOR ONE HEADWALL & ARE ESTIMATED QUANTITIES ONLY.
2. STEEL COVER TO BE 2" FROM CENTER OF OUTSIDE LAYER TO FACE CONCRETE.
3. CONSTRUCTION JOINTS WILL BE PERMITTED AS SHOWN ON THE PLANS.
4. ALL DIMENSIONS RELATING TO REINFORCING STEEL SHALL BE TO CENTER OF BARS.
5. HEADWALLS ARE DIMENSIONED FOR 1 ON 3 EMBANKMENT SLOPE. IF THE EMBANKMENT SLOPE IS OTHER THAN 1 ON 3, IT SHALL BE WARPED TO FIT THE HEADWALLS.
6. CONCRETE SHALL HAVE A MINIMUM COMPRESSIVE STRENGTH OF 3,000 POUNDS PER SQUARE INCH AT 28 DAYS UNLESS OTHER WISE NOTED. DESIGN MIX FOR 3,000 POUND CONCRETE SHALL CONTAIN A MINIMUM OF 5 SACKS OF CEMENT PER CUBIC YARD.
7. BARS SHALL BE SUPPORTED, SPACED & ACCURATELY SECURED IN PLACE IN ACCORDANCE WITH SPECIFICATION FOR PLACING REINFORCEMENT AND FOR PLACING ACCESSORIES MEETING THE REQUIREMENTS OF THE "A.C.I. MANUAL OF STANDARD PRACTICE FOR DETAILING REINFORCED CONCRETE STRUCTURES (A.C.I. 315 – 51) & LATEST REVISION."
8. FOR ODD DIAMETERS OF PIPE, USE THE NEXT LARGEST HEAD–WALL.
9. REINFORCING STEEL SHALL BE DEFORMED NEW BILLET INTERMEDIATE GRADE, CONFORMING TO A.S.T.M. SPEC. A–15–56T & A–305–56T OR LATEST REVISIONS THERETO.

ENGINEERING SERVICES

CITY OF WACO

REVISIONS

NO.	COMMENTS	BY	DATE
2	ILLEGIBLE COPY MADE INTO DRAWING	DG	04/15/2015
1	REMOVE SEAL	DG	09/03/2014

DATE 04/15/2015

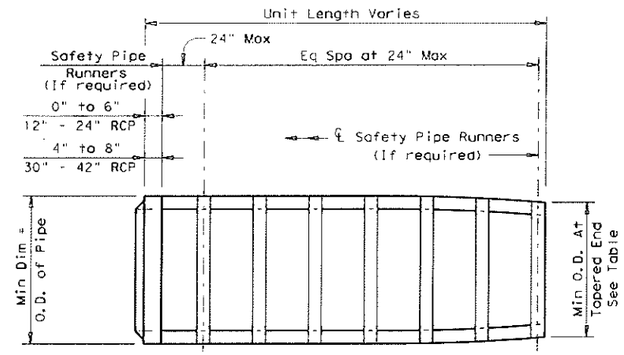

PLAN VIEW - 12" THRU 24"

1. Slope as shown elsewhere in the plans. Slope of 6:1 or flatter is required for vehicle safety.
2. Cement stabilized bedding and backfill shall be in accordance with the Item, "Excavation and Backfill for Structures". Bedding and backfill shall be considered subsidiary to the Item "Safety End Treatment". When concrete riprap is specified around the Safety End Treatment backfill shall be as directed by Engineer.
3. The top 4" of void between Precast End Treatments shall be filled with concrete Riprap and shall be considered subsidiary to Safety End Treatment.
4. Clear distance between pipes shall be adjusted to provide for the minimum distance between safety end treatments.

PIPE I.D.	MINIMUM WALL THICKNESS	MINIMUM O.D.	MIN O.D. AT TAPERED END	MIN REINF REQUIREMENTS (Sq in/ft of pipe)	MAXIMUM SLOPE	MINIMUM LENGTH OF UNIT	PIPE RUNNERS REQUIRED		REQUIRED PIPE RUNNER SIZES		
							SINGLE PIPE	MULTIPLE PIPE	NOMINAL DIA.	O.D.	I.D.
12"	2"	16"	16"	0.07 CIRC.	6:1	4'-0"	No	Yes, for >2 pipes	3" STD	3.500"	3.068"
15"	2 ¼"	19 ½"	19"	0.07 CIRC.	6:1	5'-8"	No	Yes, for >2 pipes	3" STD	3.500"	3.068"
18"	2 ½"	23"	21 ½"	0.07 CIRC.	6:1	7'-3"	No	Yes, for >2 pipes	3" STD	3.500"	3.068"
24"	3"	30"	27"	0.07 CIRC.	6:1	10'-6"	No	Yes, for >2 pipes	3" STD	3.500"	3.068"
30"	3 ½"	37"	31"	0.18 CIRC.	6:1	12'-1"	No	Yes	4" STD	4.500"	4.026"
36"	4"	44"	36"	0.19 ELIP.	6:1	15'-4"	Yes	Yes	4" STD	4.500"	4.026"
42"	4 ½"	51"	41 ½"	0.23 ELIP.	6:1	18'-7"	Yes	Yes	4" STD	4.500"	4.026"

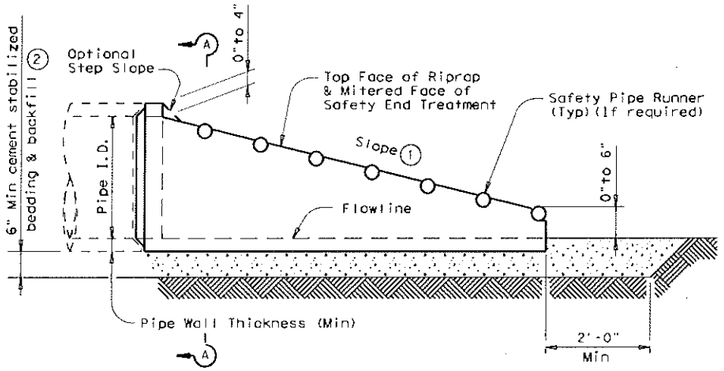

LONGITUDINAL ELEVATION - 12" THRU 24"

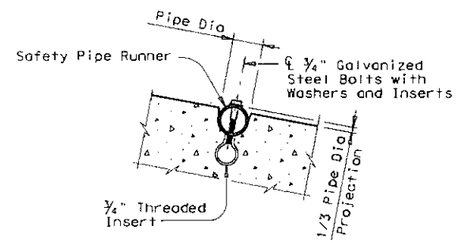

INSTALLATION DETAIL FOR SAFETY PIPE RUNNERS

(If required)

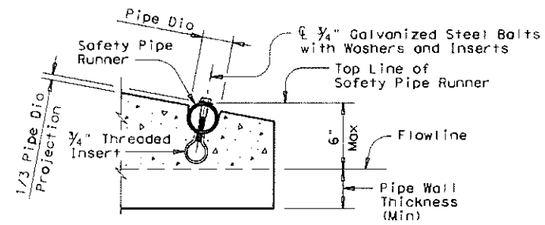

OPTION A

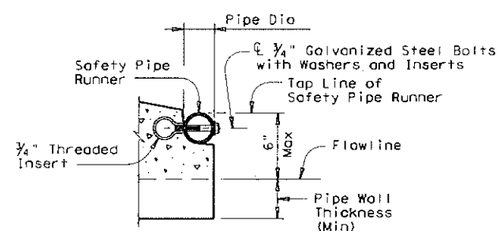

OPTION B

END DETAILS FOR INSTALLATION OF SAFETY PIPE RUNNERS

(If required)

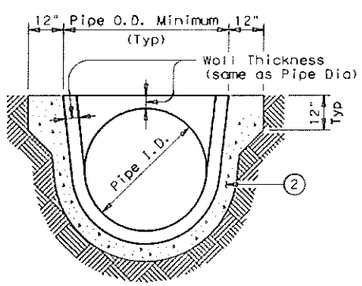

SECTION A-A

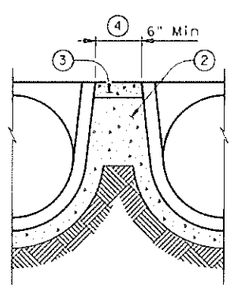

MULTIPLE PIPE INSTALLATION

GENERAL NOTES:

Precast safety end treatment for reinforced concrete pipe may be used for TYPE II end treatment as specified in Item "Safety End Treatment".

When Precast Safety End Treatment is used as a Contractor's alternate to mitered RCP, Riprap will not be required unless noted otherwise on the plans.

All precast concrete end sections shall be manufactured in accordance with Item "Reinforced Concrete Pipe Culverts" and in accordance with ASTM Specification C-76, Class III, Wall B for circular pipe.

Precast concrete end sections shall be provided with a spigot or bell end for compatibility to upstream or downstream end conditions with sufficient annular space to allow for mortar, cold applied asphalt joint compound or pre-formed plastic gasket material.

Methods of lifting shall be provided by the manufacturer for ease of loading, unloading and installation.

Pipe Runners are designed for a traversing load of 10,000 Lbs at yield as recommended by Research Report 280-2F, "Safety Treatment of Roadside Parallel-Drainage Structures", Texas Transportation Institute, March 1981.

Pipe Runners shall conform to the requirements of ASTM A53 (Type E or S, Grade B), ASTM A500 (Grade B), or API 5LX52.

All steel components except reinforcing, shall be galvanized after fabrication. Galvanizing damaged during transport or construction shall be repaired in accordance with the specifications.

Texas Department of Transportation
Bridge Division

PRECAST SAFETY END TREATMENT

TYPE II ~ PARALLEL DRAINAGE

PSET-RP

FILE: psetrpse.dgn	CK: RLW	CK: KLR	DW: JTR	CK: GAF
©TxDOT May 2005	DISTRICT	FEDERAL AID PROJECT		SHEET
REVISIONS	COUNTY		CONTROL SECT JOB	HIGHWAY

REVISIONS NO.	COMMENTS	BY	DATE

BOOK PAGE NUMBER 0000

DATE 8/18/2011

DISCLAIMER: The use of this standard is governed by the "Texas Engineering Practice Act". No warranty of any kind is made by TxDOT for any purpose whatsoever. TxDOT assumes no responsibility for the conversion of this standard to other formats or for incorrect results or damages resulting from its use.

ACC:

LEVELS DISPLAYED

WACO

ENGINEERING SERVICES

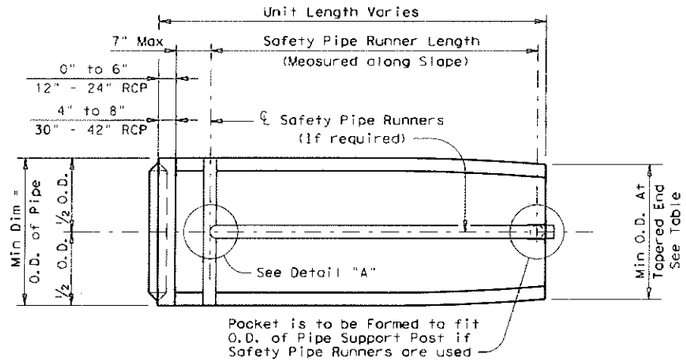

PLAN VIEW

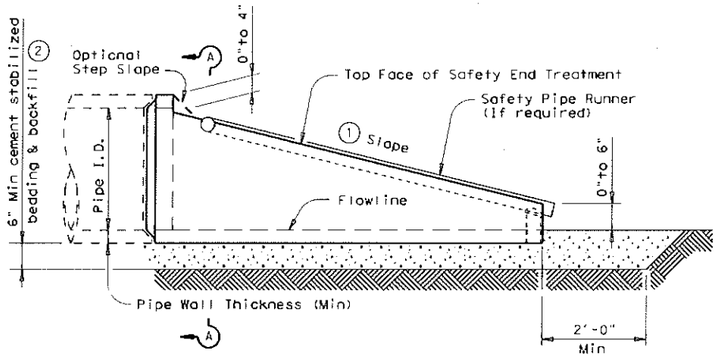

LONGITUDINAL ELEVATION

Maximum Safety Pipe Runner Lengths & Required Safety Pipe Runner Sizes			
Maximum Safety Pipe Runner Length	Required Pipe Runner Size		
	Pipe Size	Pipe O.D.	Pipe I.D.
11'- 2"	3" STD	3.500"	3.068"
15'- 6"	3 1/2" STD	4.000"	3.548"
20'-10"	4" STD	4.500"	4.026"
35'- 4"	5" STD	5.563"	5.047"

1. Slope as shown elsewhere in the plans. Slope of 3:1 or flatter is required for vehicle safety.
2. Cement stabilized bedding and backfill shall be in accordance with the Item, "Excavation and Backfill for Structures". Bedding and backfill shall be considered subsidiary to the Item "Safety End Treatment". When concrete riprap is specified around the Safety End Treatment backfill shall be as directed by Engineer.
3. The top 4" of void between Precast End Treatments shall be filled with concrete Riprap and shall be considered subsidiary to Safety End Treatment.
4. Clear distance between pipes shall be adjusted to provide for the minimum distance between safety end treatments.

PIPE I.D.	MINIMUM WALL THICKNESS	MINIMUM O.D.	MIN O.D. AT TAPERED END	MIN REINF REQUIREMENTS (Sq in/ft of pipe)	SLOPE	MINIMUM LENGTH OF UNIT	SINGLE PIPE SKEW	SINGLE PIPE PIPE RUNNERS REQUIRED	MULTIPLE PIPE SKEW	MULTIPLE PIPE PIPE RUNNERS REQUIRED
12"	2"	16"	16"	0.07 CIRC.	3:1	2'-0"	<=45 deg	No	<=45 deg	No
					4:1	2'-8"				
					6:1	4'-0"				
15"	2 1/4"	19 1/2"	19"	0.07 CIRC.	3:1	2'-10"	<=45 deg	No	<=45 deg	No
					4:1	3'-9"				
					6:1	5'-8"				
18"	2 1/2"	23"	21 1/2"	0.07 CIRC.	3:1	3'-8"	<=45 deg	No	<=45 deg	No
					4:1	4'-10"				
					6:1	7'-3"				
24"	3"	30"	27"	0.07 CIRC.	3:1	5'-3"	<=45 deg	No	<=30 deg	No
					4:1	7'-0"			>30 deg	Yes
					6:1	10'-6"				
30"	3 1/2"	37"	31"	0.18 CIRC.	3:1	6'-3"	<=15 deg	No	<=15 deg	No
					4:1	8'-2"	>15 deg	Yes	>15 deg	Yes
					6:1	12'-1"				
36"	4"	44"	36"	0.19 ELIP.	3:1	7'-10"	=0 deg	No	=>0 deg	Yes
					4:1	10'-4"	>0 deg	Yes		
					6:1	15'-4"				
42"	4 1/2"	51"	41 1/2"	0.23 ELIP.	3:1	9'-6"	=>0 deg	Yes	=>0 deg	Yes
					4:1	12'-6"				
					6:1	18'-7"				

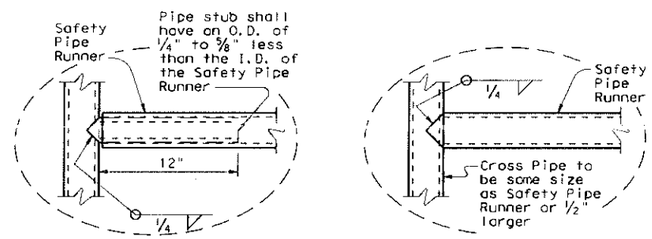

DETAIL A

GENERAL NOTES:

Precast safety end treatment for reinforced concrete pipe may be used for TYPE II end treatment as specified in Item "Safety End Treatment".

When Precast Safety End Treatment is used as a Contractor's alternate to mitered RCP, Riprap will not be required unless noted otherwise on the plans.

All precast concrete end sections shall be manufactured in accordance with Item "Reinforced Concrete Pipe Culverts" and in accordance with ASTM Specification C-76, Class III, Wall B for circular pipe.

Precast concrete end sections shall be provided with a spigot or bell end for compatibility to upstream or downstream end conditions with sufficient annular space to allow for mortar, cold applied asphalt joint compound or pre-formed plastic gasket material.

Methods of lifting shall be provided by the manufacturer for ease of loading, unloading and installation.

Pipe Runners are designed for a traversing load of 1,800 Lbs at yield as recommended by Research Report 280-1, "Safety Treatment of Roadside Cross-Drainage Structures", Texas Transportation Institute, March 1981.

Safety Pipe Runners, Cross Pipes, Pipe Support Posts, and Pipe Stubs shall conform to the requirements of ASTM A53 (Type E or S, Grade B), ASTM A500 (Grade B), or API 5LX52.

All steel components except reinforcing, shall be galvanized after fabrication. Galvanizing damaged during transport or construction shall be repaired in accordance with the specifications.

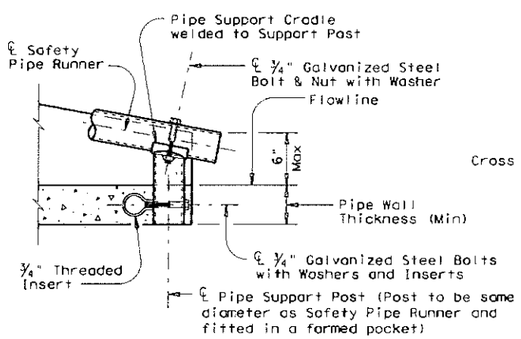

END DETAIL FOR INSTALLATION OF SAFETY PIPE RUNNERS

(If required)

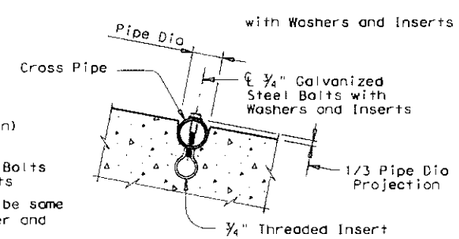

INSTALLATION DETAIL FOR SAFETY PIPE RUNNERS

(If required)

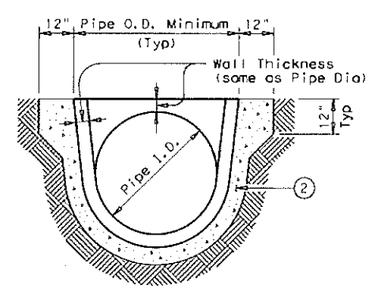

SECTION A-A

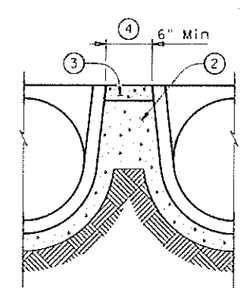

MULTIPLE PIPE INSTALLATION

Texas Department of Transportation
Bridge Division

PRECAST SAFETY END TREATMENT

TYPE II ~ CROSS DRAINAGE

PSET-RC

FILE: psetrcse.dgn	CK: RLW	CK: KLR	CK: JTR	CK: GAF
© TxDOT May 2005	DISTRICT	FEDERAL AID PROJECT		SHEET
REVISIONS	COUNTY		CONTROL SECT JOB	HIGHWAY

DISCLAIMER: The use of this standard is governed by the "Texas Engineering Practice Act". No warranty of any kind is made by TxDOT for any purpose whatsoever. TxDOT assumes no responsibility for the conversion of this standard to other formats or for incorrect results or damages resulting from its use.

LEVELS DISPLAYED | ACC:

WACO

ENGINEERING SERVICES

REVISIONS NO.	COMMENTS	BY	DATE

BOOK PAGE NUMBER 0000

DATE 8/18/2011

CITY OF WACO

GENERAL DETAILS

STORM WATER POLLUTION PREVENTION

GENERAL NOTES

1. ALL CONSTRUCTION WORK WITHIN THE CITY OF WACO MUST COMPLY WITH THE TEXAS COMMISSION ON ENVIRONMENTAL QUALITY GENERAL PERMIT FOR STORM WATER DISCHARGES FROM CONSTRUCTION ACTIVITIES UNDER THE TEXAS POLLUTANT DISCHARGE ELIMINATION SYSTEM (TPDES) PROGRAM, AND CITY OF WACO ORDINANCES AND STANDARD SPECIFICATIONS FOR CONSTRUCTION (SECTION GP–3.6.D STORM WATER POLLUTION PREVENTION PLAN (EROSION CONTROL PLAN)).

2. ALL STORM WATER POLLUTION PREVENTION AND EROSION CONTROL PLANS MUST BE APPROVED BY THE CITY OF WACO STORM WATER MANAGER PRIOR TO INSTALLATION OF THE PROTECTIVE MEASURES. THE INSTALLATION OF THE PROTECTIVE MEASURES MUST BE INSPECTED AND APPROVED BY THE CITY OF WACO ENVIRONMENTAL INSPECTOR PRIOR TO COMMENCING ANY OTHER CONSTRUCTION ACTIVITIES.

3. ALL MATERIALS USED FOR STORM WATER POLLUTION PREVENTION SHALL MEET THE MINIMUM DESIGN AND SPECIFICATION REQUIREMENTS AS REFERENCED FROM THE NORTH CENTRAL TEXAS COUNCIL OF GOVERNMENTS (NCTCOG) INTEGRATED STORM WATER MANAGEMENT (SWM) DESIGN MANUAL FOR CONSTRUCTION. THE CONTRACTOR SHALL USE APPROPRIATE CONTROL DEVICES TO PROTECT AGAINST STORM WATER POLLUTION FROM CONSTRUCTION SITE ACTIVITY.

4. IN THE EVENT OF CONFLICT BETWEEN THE SPECIFIED REQUIREMENTS AND STORM WATER POLLUTION CONTROL LAWS, RULES, OR REGULATIONS, OR OTHER LOCAL, STATE, OR FEDERAL AGENCIES, THE MORE RESTRICTIVE LAWS, RULES OR REGULATIONS SHALL APPLY.

5. ALL PROTECTIVE MEASURES SHALL BE INSPECTED REGULARLY (AT LEAST AS OFTEN AS REQUIRED BY THE TPDES CONSTRUCTION GENERAL PERMIT).

6. ALL POLLUTION PREVENTION CONTROL STRUCTURES AND PROCEDURES MUST BE MAINTAINED IN FULL WORKING ORDER AT ALL TIMES DURING CONSTRUCTION. THIS SHALL INCLUDE ANY NECESSARY REPAIR OR REPLACEMENT OF ITEMS, WHICH HAVE BECOME DAMAGED OR INEFFECTIVE. REMOVE SEDIMENT AND OTHER POLLUTANTS, WHICH ACCUMULATE IN POLLUTION CONTROL DEVICES AS NECESSARY TO MAINTAIN THE INTENDED DESIGN EFFICIENCY FOR THE POLLUTION PREVENTION MEASURE.

5. UPON COMPLETION OF CONSTRUCTION AND ACHIEVEMENT OF FINAL STABILIZATION, PROPERLY REMOVE THE TEMPORARY POLLUTANT CONTROL STRUCTURES AND COMPLETE THE AREA AS INDICATED. POLLUTION CONTROL DEVICES MADE OF ORGANIC MATERIALS DESIGNED TO DEGRADE NATURALLY IN PLACE WILL NOT REQUIRE REMOVAL, UNLESS SPECIFICALLY REQUIRED BY THE OWNER, ENGINEER, OR OWNER'S REPRESENTATIVE.

6. STANDARD DETAILS FOR SOME PROTECTIVE MEASURES HAVE BEEN INCLUDED. PLEASE REFER TO THE iSWM DESIGN MANUAL FOR OTHER PROTECTIVE MEASURES AS NEEDED.

G-1A

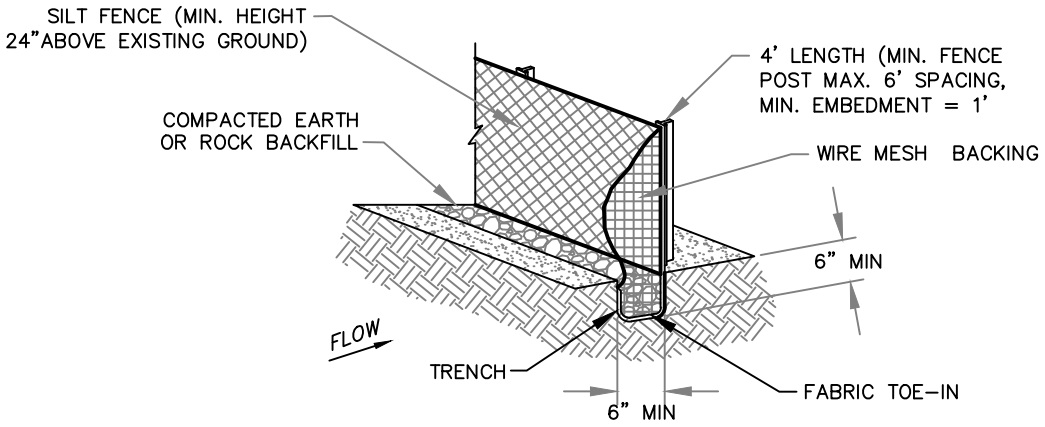

SILT FENCE

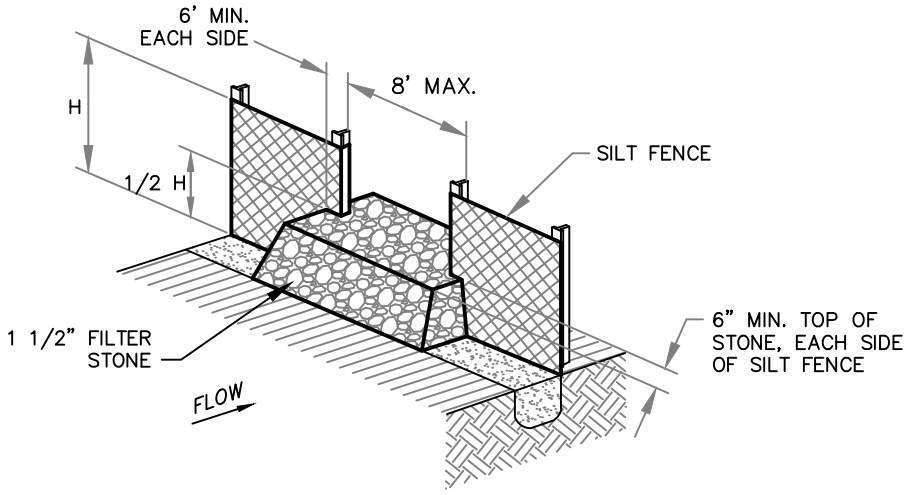

STONE OVERFLOW STRUCTURE

1. PLEASE REFER TO CITY OF WACO STANDARD SPECIFICATIONS FOR CONSTRUCTION, SECTION 1.10, PART 2, A 3 FOR SILT FENCE SPECIFICATIONS.

2. FILTER STONE FOR AN OVERFLOW STRUCTURE SHALL BE 1-1/2" WASHED STONE CONTAINING NO FINE MATERIAL. ANGULAR SHAPED STONE IS PREFERABLE TO ROUNDED SHAPED STONE.

3. FENCE POSTS SHALL BE GALVANIZED STEEL OR EQUIVALENT AND MAY BE T-SECTION OR L-SECTION, 1.3 POUNDS PER LINEAR FOOT MINIMUM, AND 4 FEET IN LENGTH MINIMUM. WOOD POSTS MAY BE USED DEPENDING ON ANTICIPATED LENGTH OF SERVICE AND PROVIDED THEY ARE 4 FEET IN LENGTH MINIMUM AND HAVE A NOMINAL CROSS SECTION OF 2 INCHES BY 4 INCHES FOR PINE OR 2 INCHES BY 2 INCHES FOR HARDWOODS.

4. SILT FENCE SHALL BE SUPPORTED BY GALVANIZED STEEL WIRE FENCE FABRIC AS FOLLOWS:
   A. 4" X 4" MESH SIZE, W1.4/1.4, MINIMUM 14-GAUGE WIRE FENCE FABRIC;
   B. HOG WIRE, 12-GAUGE WIRE, SMALL OPENINGS INSTALLED AT BOTTOM OF SILT FENCE;
   C. STANDARD 2" X 2" CHAIN LINK FENCE FABRIC; OR
   D. OTHER WELDED OR WOVEN STEEL FABRICS CONSISTING OF EQUAL OR SMALL SPACING AS THAT LISTED HEREIN AND APPROPRIATE GAUGE WIRE TO PROVIDE SUPPORT.

SILT FENCE & STONE OVERFLOW STRUCTURE

WACO

ENGINEERING SERVICES

REVISIONS

NO.	COMMENTS	BY	DATE
1	REMOVE SEAL	DG	09/03/2014

BOOK PAGE NUMBER 0000

DATE 09/03/2014

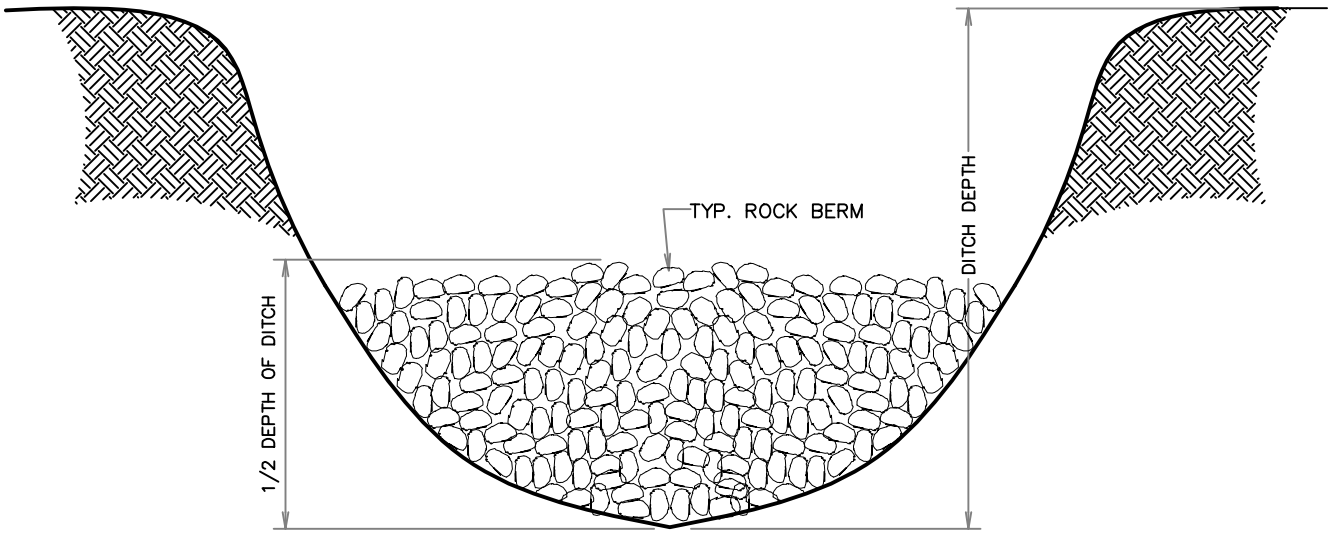

SECTION

① HEIGHT OF ROCK BERM SHALL BE APPROXIMATELY 1/2 DEPTH OF DITCH

② WIDTH OF BASE OF BERM SHALL BE APPROXIMATELY EQUAL TO THE HEIGHT

TYPICAL ROCK BERM

WACO

ENGINEERING SERVICES

REVISIONS

NO.	COMMENTS	BY	DATE
1	REMOVE SEAL	DG	09/03/2014

BOOK PAGE NUMBER 0000

DATE 09/03/2014

G-3

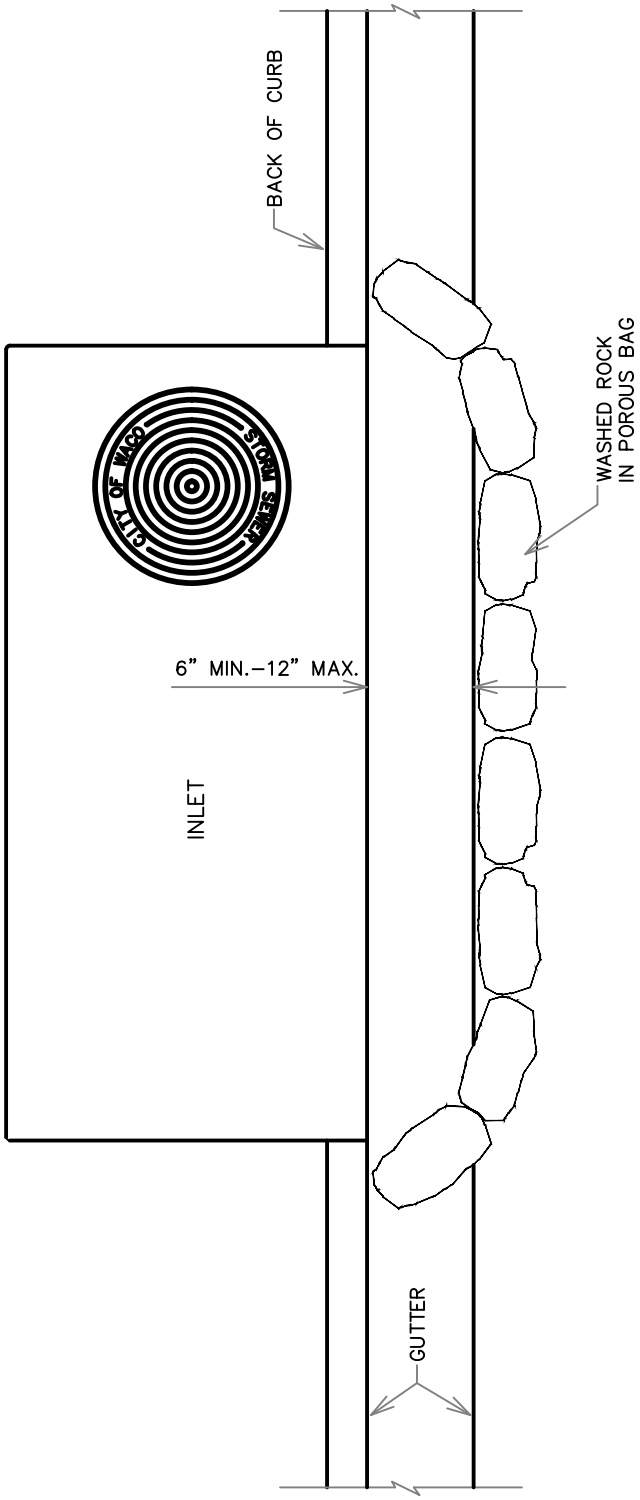

TOP VIEW

CURB INLET DRAIN FILTER

WACO

ENGINEERING SERVICES

REVISIONS

NO.	COMMENTS	BY	DATE
1	REMOVE SEAL	DG	09/03/2014

BOOK PAGE NUMBER 0000

DATE 09/03/2014

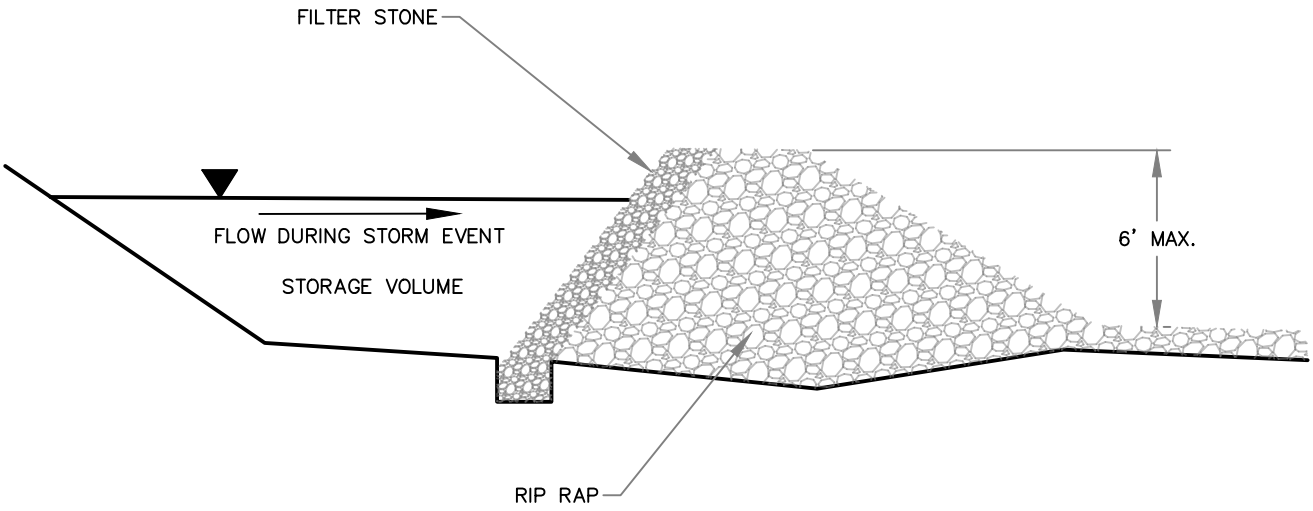

1. STONE OUTLET SEDIMENT TRAPS ARE USED FOR SITUATIONS WHERE FLOWS ARE CONCENTRATED IN A DRAINAGE SWALE OR CHANNEL.

2. PLEASE REFER TO CITY OF WACO STANDARD SPECIFICATIONS FOR CONSTRUCTION, SECTION 1.10, PART 2, A 5 FOR STONE OUTLET SEDIMENT TRAP SPECIFICATIONS.

STONE OUTLET SEDIMENT TRAP

WACO

ENGINEERING SERVICES

REVISIONS

NO.	COMMENTS	BY	DATE
1	REMOVE SEAL	DG	09/03/2014

BOOK PAGE NUMBER 0000

DATE 09/03/2014

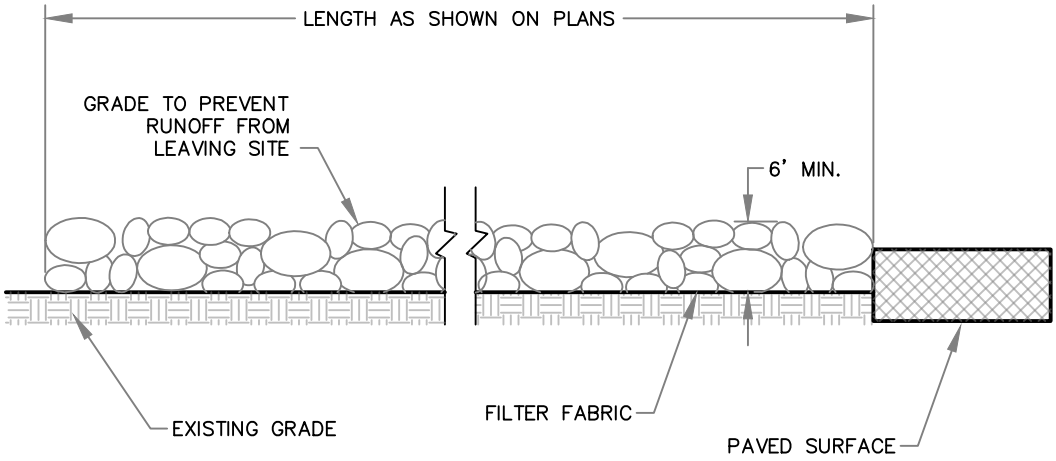

PROFILE VIEW

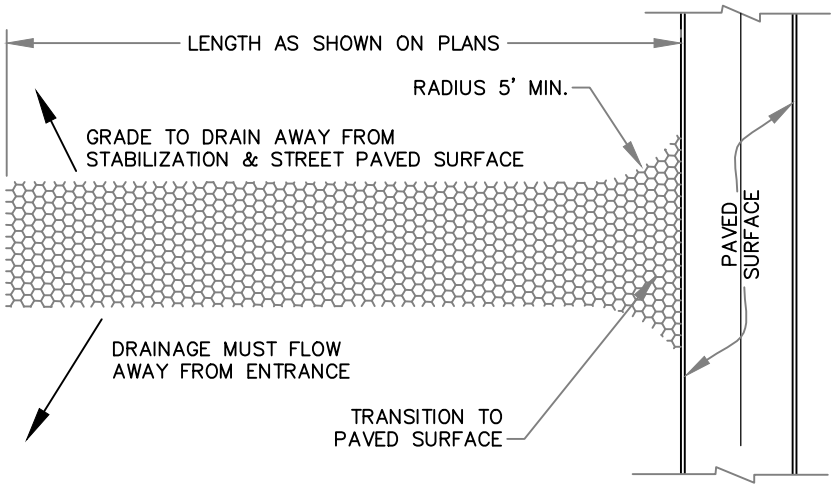

ENTRANCE MUST BE SLOPED SO THAT STORM WATER IS NOT ALLOWED TO LEAVE THE SITE AND ENTER ROADWAYS.

PLAN VIEW

1. STABILIZED CONSTRUCTION ENTRANCES USED FOR SITES IN WHICH SIGNIFICANT TRUCK TRAFFIC OCCURS ON A DAILY BASIS.

2. PLEASE REFER TO CITY OF WACO STANDARD SPECIFICATIONS FOR CONSTRUCTION, SECTION 1.10, PART 2, A 8 FOR STONE OUTLET SEDIMENT TRAP SPECIFICATIONS.

STABILIZED CONSTRUCTION ENTRANCE

WACO

ENGINEERING SERVICES

REVISIONS

NO.	COMMENTS	BY	DATE
1	REMOVE SEAL	DG	09/03/2014

BOOK PAGE NUMBER 0000

DATE 09/03/2014

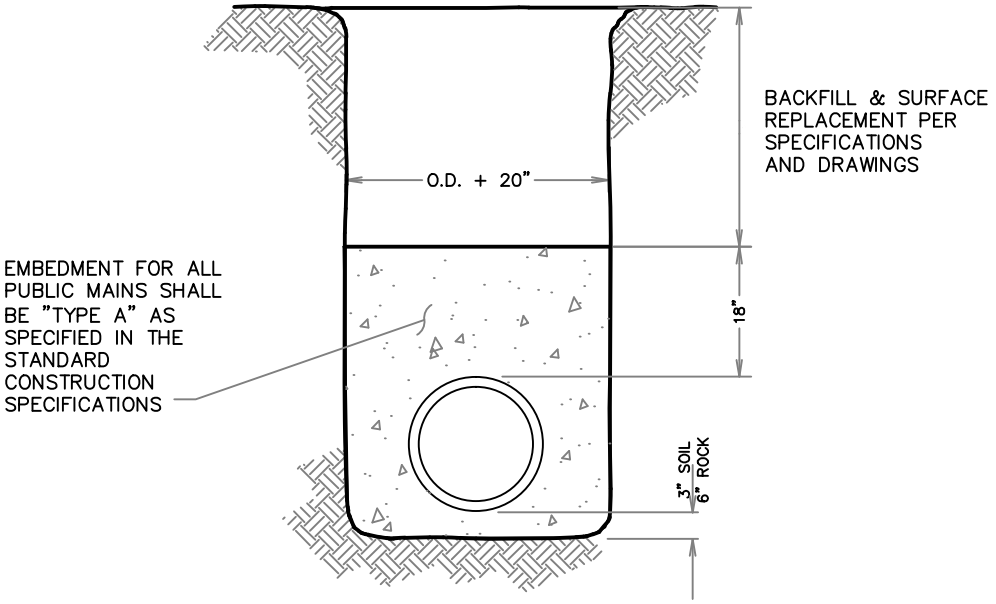

STANDARD EMBEDMENT

NOTE: IF GROUND WATER IS ENCOUNTERED LAY THE PIPE IN A BEDDING OF 3/4" WASHED ROCK AS SHOWN ABOVE. REFER TO NOTES ON STANDARD DETAIL S-2.

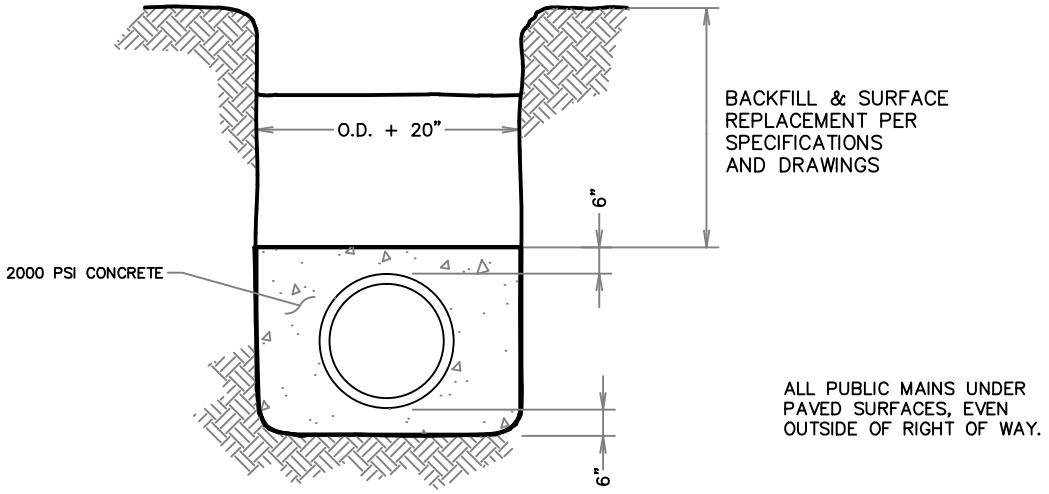

ALL PUBLIC MAINS UNDER PAVED SURFACES, EVEN OUTSIDE OF RIGHT OF WAY.

CONCRETE ENCASEMENT

WACO

ENGINEERING SERVICES

REVISIONS

NO.	COMMENTS	BY	DATE
03	REMOVE SEAL	DG	09/03/2014
02	ADD NOTES REGARDING BACKFILL & SURFACE REPLACEMENT	DG	05/01/2014
01	REVISED NOTE REGARDING BEDDING OF 3/4" WASHED ROCK	DG	09/09/2011

BOOK PAGE NUMBER 0000

DATE 09/03/2014

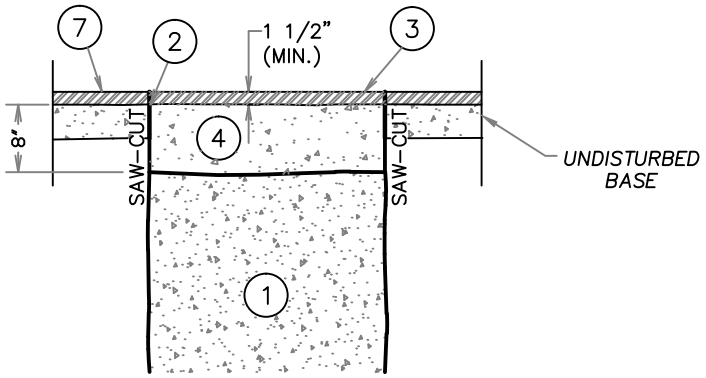

CLASS A

H.M.A.C.

NOTE: CLASS A-1 SURFACE REPLACEMENT SHALL HAVE 2" ASPHALT AND 10" CONCRETE

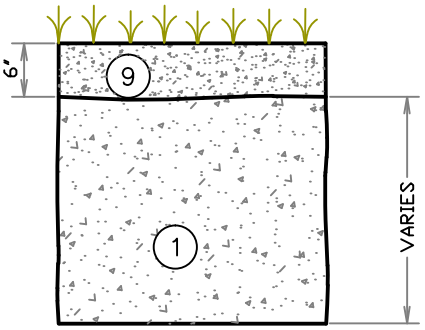

CLASS E

SEED OR SOD

SURFACE REPLACEMENT DETAILS

1. GRAVEL FOR TRENCH BACKFILL – MECHANICALLY COMPACTED IN ONE FOOT (MAX.) LIFTS TO 95% STANDARD PROCTOR DENSITY.
2. TACK COAT OF RC–2 ASPHALT–APPLIED TO CLEAN SURFACE AND ALLOWED TO CURE.
3. HOT MIX ASPHALTIC CONCRETE – HOT LAY, PLACED AND COMPACTED TO MATCH EXISTING SURFACE THICKNESS. 1 1/2" MIN.
4. CONCRETE – MIN. 2000 P.S.I, PLACED TO 1 1/2" BELOW EXISTING SURFACE. 8" MIN.
5. CONCRETE – MIN. 3000 P.S.I., PLACED TO MATCH EXISTING CONCRETE PAVEMENT. 8" MIN. IF THE EXISTING CONCRETE PAVEMENT IS REINFORCED, THE NEW CONCRETE PAVEMENT SHALL BE REINFORCED IN A LIKE MANNER. SEE STANDARD DETAILS G–10 & ST–1
6. ROAD GRAVEL – MECHANICALLY COMPACTED TO 95% STD. PROCTOR DENSITY.
7. CUT – EDGE OF EXISTING PAVEMENT ON BOTH SIDES OF DITCH LINE TO PRODUCE A SMOOTH AND EVEN EDGE OF SURFACE REPLACEMENT.
8. USE FLOWABLE FILL TO BACKFILL ALL DITCHES 18" OR NARROWER, IN THE RIGHT OF WAY.
9. 6" MINIMUM TOP SOIL AND SEED OR SOD – PAID SUBSIDIARY.

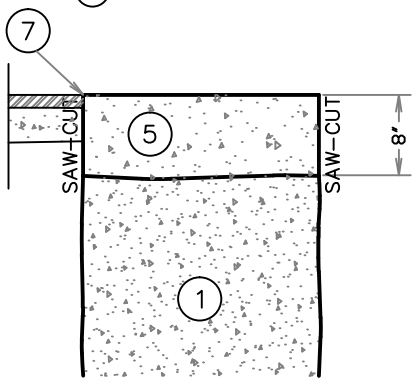

CLASS C

CONCRETE

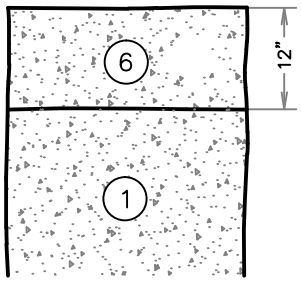

CLASS D

ROAD GRAVEL

WACO

ENGINEERING SERVICES

REVISIONS

NO.	COMMENTS	BY	DATE
04	REMOVE SEAL	DG	09/03/2014
03	REMOVE "CLASS B" ADD "CLASS E"/ADD NOTE 9.	DG	05/01/2014
02	REVISE NOTE #8	DG	02/01/2013
01	REMOVE DIMENSION: 6" MININUM (CLASS B) / ADD SAW-CUT	DG	06/21/2011

BOOK PAGE NUMBER 0000

DATE 09/03/2014

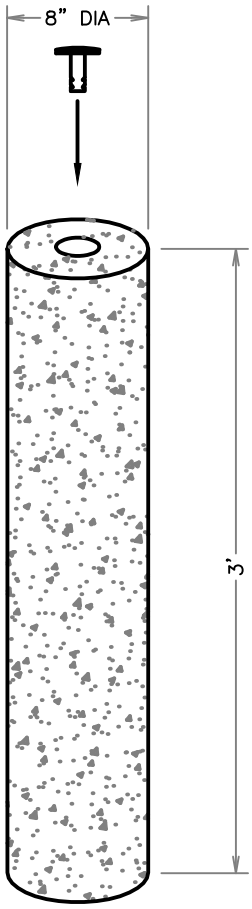

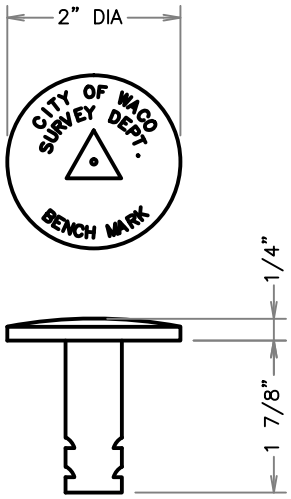

NOTES:

THE CITY OF WACO BENCHMARKS SHALL BE PLACED AT A MAXIMUM SPACING OF 750'. THE CITY OF WACO ENGINEERING DEPT. WILL PROVIDE THE BENCHMARKS. THE CONTRACTOR WILL COORDINATE WITH THE ENGINEERING CONSTRUCTION INSPECTOR.

THE CITY OF WACO SURVEY DEPT. MAY SUPPLY ONE "CITY OF WACO BENCHMARK" FOR PLACEMENT IN INLET TOP IN EITHER BACK CORNER.

BENCHMARK DETAIL

NTS

THE CITY OF WACO SURVEY DEPT. WILL PLACE "CITY OF WACO BENCH MARK" INTO THE CONCRETE CYLINDER.

CONCRETE CYLINDER FOR BENCHMARKS

(NO SCALE)

WACO

ENGINEERING SERVICES

REVISIONS

NO.	COMMENTS	BY	DATE
02	REMOVE SEAL	DG	09/03/2014
01	ADDED BENCHMARK NOTES AND DIMENSIONS.	DG	02/01/2013

BOOK PAGE NUMBER 0000

DATE 09/03/2014

NOTES:

1) TRAFFIC AREAS SHALL INCLUDE ALL AREAS UNDER THE INFLUENCE OF TRAFFIC, INCLUDING ALL TRENCHES IN THE RIGHT OF WAY OR BACK OF CURB, ALL ALLEY WAYS, AND PARKING LOTS.

2) PLEASE REFER TO STANDARD DETAIL G-4 FOR EMBEDMENT INFORMATION AND STANDARD DETAIL G-5 FOR SURFACE REPLACEMENT INFORMATION.

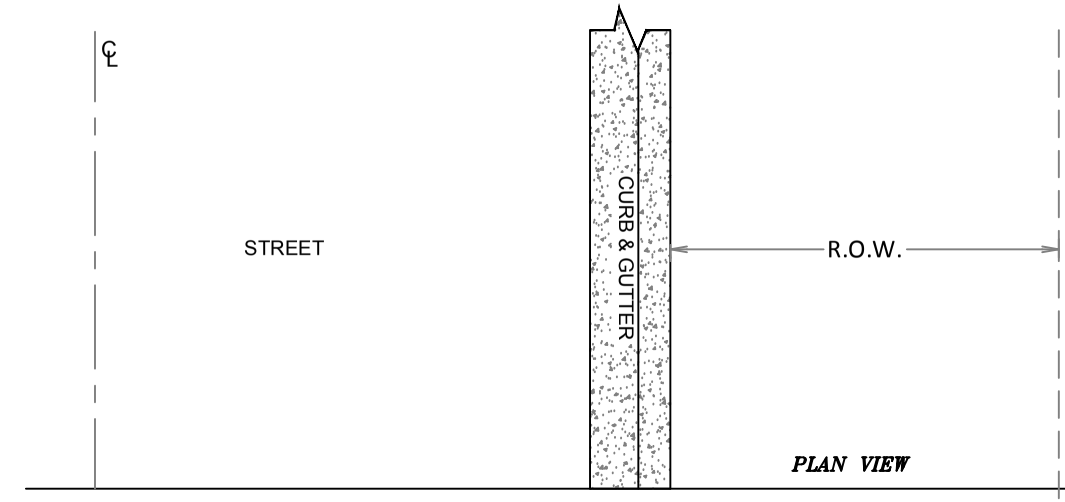

PLAN VIEW

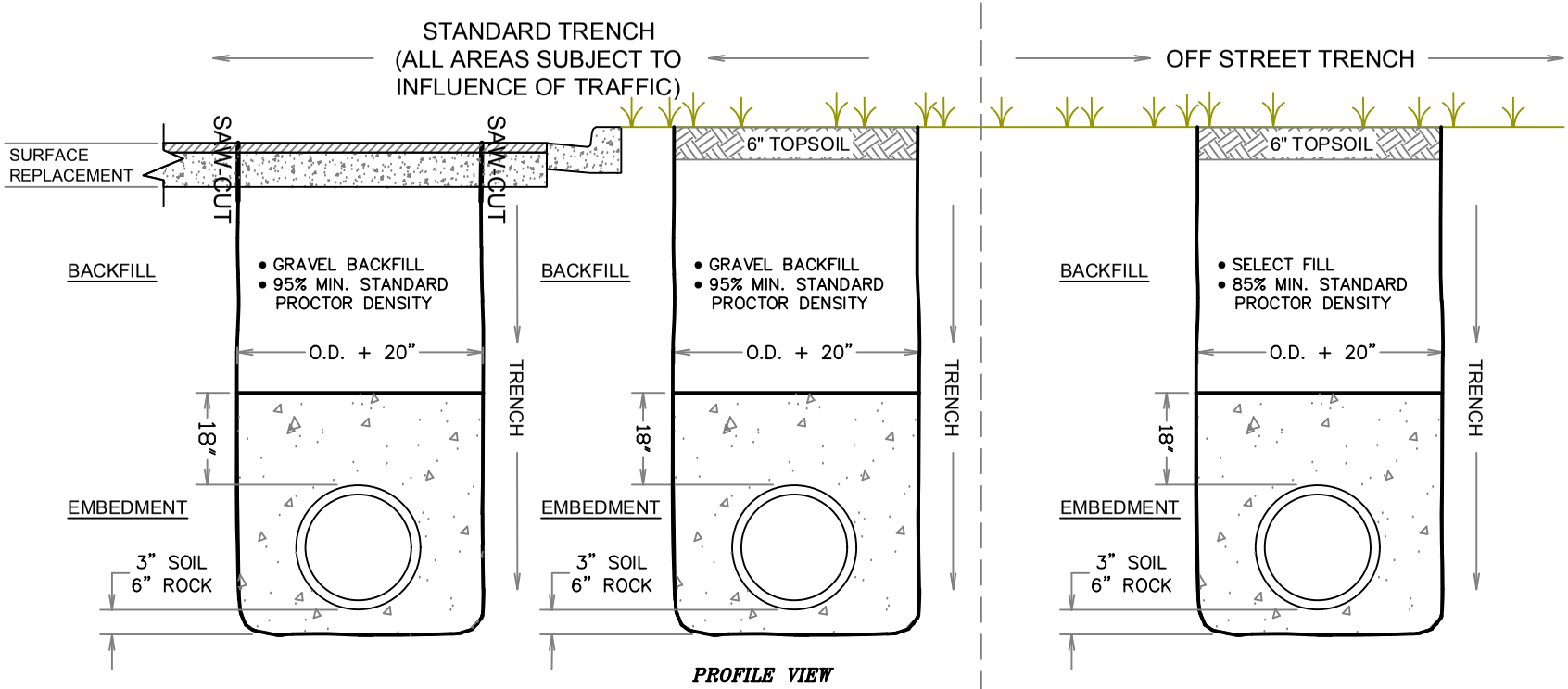

PROFILE VIEW

PAY ITEMS	PAY ITEMS	PAY ITEMS
• PIPING = L.F. • SURFACE REPLACEMENT = L.F. (TYPE "A" SURFACE REPLACEMENT SHOWN, VARIES)	• PIPING = L.F. (VEGETATION SUBSIDIARY)	• PIPING = L.F. (VEGETATION SUBSIDIARY)

TRENCH BACKFILL GUIDELINES

G-8

WACO

ENGINEERING SERVICES

REVISIONS

NO.	COMMENTS	BY	DATE
03	REMOVE SEAL	DG	09/03/2014
02	ADD NOTE 2.	DG	05/01/2014
01	REVISE NOTE 1.	DG	02/01/2013

BOOK PAGE NUMBER 0000

DATE 09/03/2014

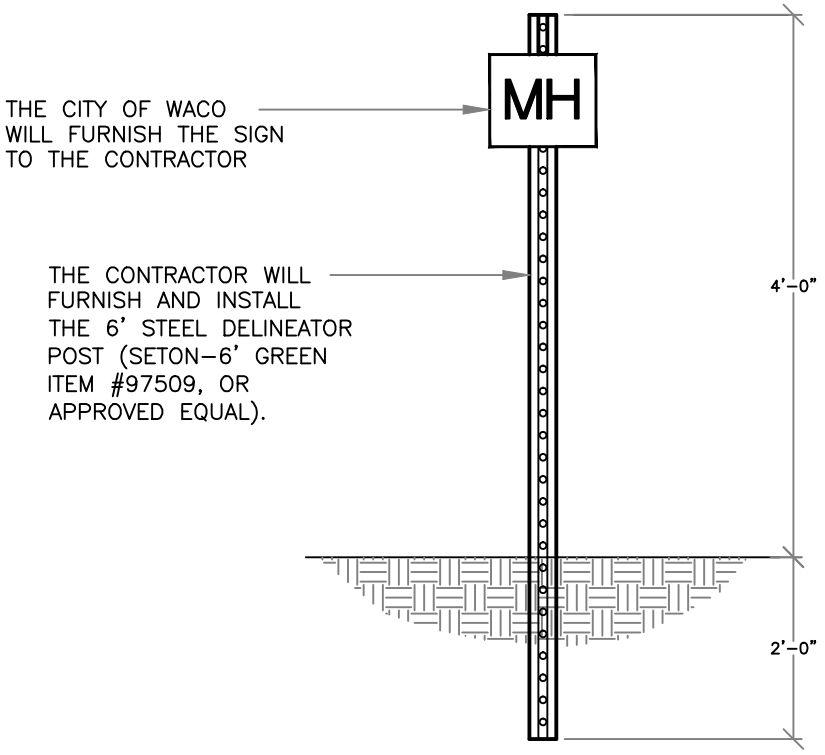

DELINEATOR POST DETAIL

N.T.S.

WACO

ENGINEERING SERVICES

REVISIONS

NO.	COMMENTS	BY	DATE
1	REMOVE SEAL	DG	09/03/2014

BOOK PAGE NUMBER
0000

DATE
09/03/2014

GENERAL CONCRETE & REINFORCEMENT NOTES

G-10

GENERAL

1. ALL CONCRETE AND REINFORCEMENT MATERIALS AND PLACEMENT MUST COMPLY WITH SECTION 5.1 OF THE CITY OF WACO STANDARD SPECIFICATIONS FOR CONSTRUCTION.

2. CURING MEMBRANE SHALL BE APPLIED ACCORDING TO MANUFACTURER'S RECOMMENDATIONS.

MATERIALS

3. ALL CONCRETE SHALL BE A 3000 PSI, 5 SACK, MIX WITH A MAXIMUM 15% FLYASH CONTENT; PLACED AT A MAXIMUM 4" SLUMP, UNLESS OTHERWISE SPECIFIED BY THE ENGINEER OF RECORD AND APPROVED BY THE CITY ENGINEER.

4. ALL REINFORCING STEEL SHALL BE ASTM A 615 GRADE 60, UNLESS OTHERWISE SPECIFIED.

SITE PREPARATION

5. GRADE AND SUB GRADE NEED TO BE ADEQUATELY WATERED, PRIOR TO THE PLACEMENT OF PUG AND PRIOR TO THE PLACEMENT OF CONCRETE.

6. GRADE AND/OR SUB GRADE SHALL BE COMPACTED TO 95% STANDARD PROCTOR DENSITY AT ±2% OPTIMAL MOISTURE CONTENT.

REINFORCING STEEL

7. CONSTRUCTION VEHICLES SHALL NOT DRIVE ON REINFORCEMENT.

8. REINFORCING STEEL SHALL BE PLACED IN ACCORDANCE WITH THE DESIGN SPECIFICATIONS AND THE ACI STANDARDS, WITH OVERLAPS OF 40 BAR DIAMETERS.

9. DOWEL BARS SHALL BE SMOOTH, LEVEL, AND PERPENDICULAR TO THE JOINT; ADEQUATELY SUPPORTED TO RETAIN PROPER ALIGNMENT; AND SHALL HAVE ONE END PROTECTED AGAINST BONDING TO THE CONCRETE IN ACCORDANCE WITH STANDARD CONSTRUCTIONS SPECIFICATIONS (SEE SECTION 5.1 PART 1 ITEM 6).

10. REBAR CHAIRS SHALL BE PLACED ON 4' MAXIMUM SPACING, EACH WAY.

11. REBAR SHALL BE PLACED SUCH THAT THE MINIMUM COVER IS 2", AND THE MAXIMUM LATERAL COVER IS 3".

CONCRETE

12. PLACEMENT OF CONCRETE NEEDS TO COMPLY WITH THE SPECIFICATIONS AND ACI STANDARDS, INCLUDING HOT AND COLD WEATHER PLACEMENT. SEE STANDARD SPECIFICATION SECTION 5.1 PART 3 ITEM E FOR MORE INFORMATION.

13. NO WATER SHALL BE ADDED AFTER INSPECTION AND TESTING.

14. CONCRETE SHALL BE VIBRATED WHERE POSSIBLE.

15. UNLESS OTHERWISE SPECIFIED, CONCRETE SHALL BE PLACED AT A 4" SLUMP, ±1".

DIMENSIONAL TOLERANCES

16. LEVEL AND HORIZONTAL ALIGNMENT TOLERANCES FOR CURBS, GUTTERS, PAVEMENTS, SIDEWALKS, AND RAMPS, IN ALL DIRECTIONS, SHALL BE SUCH THAT THE GAP BELOW AN UNLEVELED 10' STRAIGHTEDGE RESTING ON THE HIGH SPOTS SHALL NOT EXCEED 1/8".

17. DIMENSIONAL TOLERANCES FOR OTHER CONCRETE PLACEMENTS SHALL COMPLY WITH ACI 117.

CONSTRUCTION AND CRACK CONTROL JOINTS

18. UNLESS OTHERWISE SPECIFIED CONSTRUCTION (FULL DEPTH) JOINTS SHALL BE PLACED AT MAXIMUM OF 50' AND CRACK CONTROL JOINTS (DUMMY JOINTS) AT A MAXIMUM OF 10'.

19. CRACK CONTROL JOINTS MAY BE TOOLED OR SAWED A MINIMUM OF 1/2 THE THICKNESS OF THE CONCRETE ON CURB AND GUTTER AND 1/2" ON SIDEWALKS.

20. CONSTRUCTION JOINTS ARE FULL DEPTH JOINTS AND MAY BE CONSTRUCTED WITH DOWEL BARS, AS INDICATED IN THE DESIGN AND DETAILS.

21. CONSTRUCTION JOINTS WITH EXPANSION MATERIAL ARE FULL DEPTH JOINTS THAT MAY BE CONSTRUCTED WITH DOWEL BARS, AS INDICATED IN THE DESIGN AND DETAILS. EXPANSION MATERIAL MAY BE 1/2" THICK REDWOOD OR ANY MATERIAL COMPLYING WITH ASTM D 1751. ALL MATERIALS MUST BE PLACED IN ACCORDANCE WITH MANUFACTURERS RECOMMENDATIONS.

CONSTRUCTION MATERIAL LAB TESTING MATRIX - 1 OF 3

Construction Operation	Standard Specifications		Standard Details	Applicable Testing	Frequency of Testing
	Material Specs	Construction Specs			
Embankment		Section 1.5, Part 2		Standard Proctor & field densities	Proctor for each material to be used. Densities to be project specific
Trenching Operations	Section 4.2, Part 2	Section 4.2, Part 3			
Embedment	Section 4.2, Part 2.A.1, & Part 2.A.2	Section 4.2, Part 3.A.5	G-4 & G-8	Gradations, Atterberg Limits, Standard Proctor, Field Densities	Gradation, Atterberg Limits, and Proctor at beginning of project on material submitted for use and at any time there is an apparent change in material. Densities to be project specific.
Backfill	Section 4.2, Part 2.A.3	Section 4.2, Part 3.A.5	G-5 & G-8	Gradations, Atterberg Limits, Standard Proctor, Field Densities	Gradation, Atterberg Limits, and Proctor at beginning of project on material submitted for use and at any time there is an apparent change in material. Densities: 4 in first 100 LF and 2 every additional 500 LF. Additional densities as required if compaction fails to meet specifications.
Flowable Fill	Section 4.2, Part 2.A.3(f)		G-5 Note 8 & G-8 Note 2		

G-11

ENGINEERING SERVICES

CITY OF WACO

REVISIONS			
NO.	COMMENTS	BY	DATE

DATE

02/25/2015

CONSTRUCTION MATERIAL LAB TESTING MATRIX - 2 OF 3

Construction Operation	Standard Specifications		Standard Details	Applicable Testing	Frequency of Testing
	Material Specs	Construction Specs			
Subgrade	Testing - Section 2.6				
Stabilization Determination			ST-2	Atterberg Limits to determine if stabilization is necessary, pH to determine amount of lime needed to stabilize	Determined during design.
Lime Treatment	Section 2.4, Part 2	Section 2.4, Part 3	ST-2	Gradations, Standard Proctor, Moisture Bias Calculations, Field Densities	Initial gradations performed to determine mixing pattern. Standard Proctor performed on each material that is visibly different. Densities performed at a rate of one per 300 LF of paving for two lanes.
Portland Cement Treatment	Section 2.2.B, Part 2	Section 2.2.B, Part 3		Unconfined Compressive Strength	1 sample per day of operations
Reclamation	Section 2.3.D, Part 2	Section 2.3.D, Part 3		Refer to either Lime Treatment or Portland Cement Treatment	Refer to either Lime Treatment or Portland Cement Treatment
Existing Material		Section 2.2, Part 3		Standard Proctor, Field Densities	Standard Proctor performed on each visibly different material. Densities performed at a rate of one per 300 LF of paving for two lanes.
Base Course	Testing - Section 2.6				
Gravel Base Course	Section 2.3, Part 2	Section 2.3, Part 3		Gradations, Atterberg Limits, Standard Proctor, Field Densities	Gradation, Atterberg Limits, and Proctor at beginning of project on material submitted for use and at any time there is an apparent change in material. Densities to be project specific.
Flexible Base	Section 2.3.B, Part 2	Section 2.3.B, Part 3		Gradations, Atterberg Limits, Standard Proctor, Field Densities	Gradation, Atterberg Limits, and Proctor at beginning of project on material submitted for use and at any time there is an apparent change in material. Densities to be project specific.
Cement Treated Base (Pug Base)	Section 2.3.C, Part 2	Section 2.3.C, Part 3	ST-2	Unconfined Compressive Strength	1 sample per day of operations

G-11A

ENGINEERING SERVICES

CITY OF WACO

REVISIONS			
NO.	COMMENTS	BY	DATE

DATE

02/25/2015

CONSTRUCTION MATERIAL LAB TESTING MATRIX - 3 OF 3

Construction Operation	Standard Specifications		Standard Details	Applicable Testing	Frequency of Testing
	Material Specs	Construction Specs			
Surface Course	Testing - Section 3.7				
Hot-Mix Asphaltic Concrete Pavement	Section 3.3, Part 2	Section 3.3, Part 3	ST-2	Extraction, Gradation, Stability & Flow, Densities	1 sample per day of paving operations. Densities - one per 300 LF of paving for two lanes.
Portland Cement Concrete Paving	Section 3.6, Part 2	Section 3.6, Part 3	ST-1, ST-3 thru ST-7, G-10	Air Content, Slump, Compressive Strength	1 set of 4 cylinders per 150 CY but no less than 2 sets per day
Concrete	Testing - Section 5.6				
Curb and Gutter	Section 5.1, Part 2 & 3	Section 5.3, Part 3	ST-1, ST-4, ST-8, ST-9, ST-9A, ST-9B, G-10	Slump, Compressive Strength	One set of cylinders per placement for the first 5 placements then one set for every other placement thereafter. (max. of 2 sets per day) *Different trucks on the same site at different times of the day constitute different placements.
Drive Approach	Section 5.1, Part 2 & 3	Section 5.4, Part 3	ST-1, ST-10, ST-11, G-10	Slump, Compressive Strength	
Valley & Fillet	Section 5.1, Part 2 & 3		ST-1, ST-11, ST-12, G-10	Slump, Compressive Strength	
Sidewalk, Wheelchair Ramps, & Architectural Retaining Walls	Section 5.1, Part 2 & 3	Section 5.4, Part 3	ST-1, SW-1 thru SW-19, G-10	Slump, Compressive Strength	
Concrete Lined Channel	Section 5.1, Part 2 & 3		D-1, D-14, G-10	Slump, Compressive Strength	
Cast-In-Place Sanitary Sewer Manholes	Section 5.1, Part 2 & 3	Section 4.8, Part 3.A.3	S-2 Note 15, G-10	Slump, Compressive Strength	
Storm Sewer Manholes	Section 5.1, Part 2 & 3		D-1, D-10 thru D-13, G-10	Slump, Compressive Strength	
Inlets	Section 5.1, Part 2 & 3		D-1 thru D-7, D-9, G-10	Slump, Compressive Strength	
Concrete Medians	Section 5.1, Part 2 & 3	Section 5.1, Part 3	ST-22, G-10	Slump, Compressive Strength	
Reinforced Concrete Headers	Section 5.1, Part 2 & 3	Section 5.1, Part 3	G-10	Slump, Compressive Strength	
Concrete Steps	Section 5.1, Part 2 & 3	Section 5.1, Part 3	G-10	Slump, Compressive Strength	
Retaining Walls (Structural)	Section 5.1, Part 2 & 3	Section 5.1, Part 3	G-10	Slump, Compressive Strength	One set per placement

G-11B

ENGINEERING SERVICES

CITY OF WACO

REVISIONS			
NO.	COMMENTS	BY	DATE

DATE

02/25/2015

CITY OF WACO

TRAFFIC DETAILS

TRAFFIC CONTROL PLANS

GENERAL REQUIREMENTS

- MUST CONFORM WITH CURRENT TEXAS MUTCD STANDARD
- MUST CLEARLY DEPICT EACH CONSTRUCTION STAGE
- MUST BE COMPILED BY A LICENSED OR CERTIFIED PERSONNEL
  - TEXAS LICENSED PROFESSIONAL ENGINEER
  - IMSA CERTIFIED WORK ZONE PERSONNEL
  - TEEX CERTIFIED WORK ZONE PERSONNEL (HW S002)

TCP SUBMITTAL:

- THE TCP SHALL BE SUBMITTED TO THE CITY OF WACO ENGINEERING OFFICE 15 DAYS PRIOR TO THE ANTICIPATED START DATE, WITH COPY OF CURRENT CERTIFICATION.

OTHER INFORMATION

- MULTIPLE PHASES OF CONSTRUCTION WILL REQUIRE A SEPARATE TCP FOR EACH PHASE. ALL MAY BE SUBMITTED AT ONE TIME FOR ACCEPTANCE.
- EACH TCP MUST BE DEVELOPED TO ADDRESS THE SPECIFIC CONDITIONS OF THE PLANNED CONSTRUCTION WORK ZONE LOCATION.
- CITY ORDINANCE: SEC. 23-2 TRAFFIC CONTROL

LOCAL ROADS (CLASS 4)

- TCP REQUIRED FOR LANE CLOSURES EXCEEDING 4 HOURS
- TCP MAY UTILIZE TX MUTCD TYPICAL DETAILS
- NIGHT TIME CLOSURES WILL REQUIRE 7' TALL SIGNS

COLLECTORS (CLASS 3)

- TCP REQUIRED FOR ANY LANE CLOSURE
- TCP MAY UTILIZE TX MUTCD TYPICAL DETAILS, EXCEPT AS FOLLOWS
  - SITE SPECIFIC TCP REQUIRED AT SIGNALIZED INTERSECTIONS
- NIGHT TIME CLOSURE WILL REQUIRE 7' TALL SIGNS AND ARROW BOARDS

MINOR ARTERIAL (CLASS 2)

- TCP REQUIRED FOR ANY LANE CLOSURE
- TCP MUST BE SITE SPECIFIC
- NIGHT TIME CLOSURE WILL REQUIRE 7' TALL SIGNS AND ARROW BOARDS

MAJOR ARTERIAL (CLASS 1)

- TCP REQUIRED FOR ANY LANE CLOSURE
- TCP MUST BE SITE SPECIFIC, AND SEALED BY A PROFESSIONAL ENGINEER
- NIGHT TIME CLOSURE WILL REQUIRE 7' TALL SIGNS AND ARROW BOARDS

NOTE: TCP'S FOR TX DOT ROADS, OR FOR PROJECTS OVERSEEN BY TX DOT MAY REQUIRE A TEXAS PROFESSIONAL ENGINEER TO STAMP. TCP'S FOR PROJECTS OCCURRING ON STATE ROADS WILL REQUIRE TXDOT APPROVAL. ACCESS TO AREA SCHOOLS, CHURCHES, AND OTHER PUBLIC BUILDINGS WILL NEED TO BE INCORPORATED INTO TCP'S.

ANTIQUE/SHOEBOX LIGHT & ASSOC. ITEMS SPECS. (LED)

1.0 **LIGHTING POLES AND FIXTURES:**
THE LIGHTING POLES FURNISHED FOR MOUNTING LUMINARIES SHALL BE FREE FROM IMPERFECTIONS AND PRESENT A PLEASING APPEARANCE WHEN PLUMBED AND SECURED TO THE FOUNDATION. THE FINISHED POLE SHALL HAVE A SMOOTH UNIFORM FINISH FREE FROM PITS, SCRATCHES, BLISTERS OR OTHER DEFECTS. EACH SHOE BOX STYLE POLE SHALL HAVE A REMOVABLE POLE CAP. THE MOUNTING HEIGHT SHALL BE AS SPECIFIED PER POLE TYPE. ALL FIXTURES SHALL NOT REQUIRE INDIVIDUAL PHOTOCELLS OR PHOTOCELL SOCKETS. ALL POLES SHALL NOT HAVE FACTORY INSTALLED FUSE HOLDERS, BUT SHALL HAVE EXTERNAL FUSE HOLDERS INSTALLED AT THE BASE OF EACH POLE. ALL ANTIQUE LIGHT POLES AND FIXTURES SHALL HAVE A POWDER COAT PAINT FINISH.

ANTIQUE DECORATIVE POLE AND FIXTURE
THE ANTIQUE LIGHT POLE AND FIXTURE MANUFACTURE AND PART NUMBER:

MANUFACTURE:	ANTIQUE STREET LIGHTING CO.
POLE PART NUMBER:	#PI C17 14A DGRH
FIXTURE PART NUMBER:	#A25 W INC MOG ACT 120 DGRH
COLOR CODE:	POWDER COAT PAINT COLOR DGRH = # RAL 6012 (BLACK GREEN)
LAMP:	PRUF 35W (#211-03) (120-277 V) DAY WHITE

SHOE BOX TYPE AREA LIGHTING POLE AND FIXTURE (PARKING LOTS ONLY)
THE SHOE BOX TYPE LIGHT POLE AND FIXTURE MANUFACTURE PART NUMBER:

COLOR CODE:	POWDER COAT PAINT COLOR # RAL 8019 (BLACK GREEN)
POLE MANUFACTURE:	KW POLE OR APPROVAL EQUAL
POLE PART NUMBER:	SINGLE FIXTURE #SSP30-6.0-7-BRZ DM10 W/2" X 12" HORIZONTAL PIPE TENON MOUNT
FIXTURE MANUFACTURE:	DURALIGHT OR APPROVED EQUAL*
FIXTURE PART NUMBER:	# JXM-ST110 - LED COBRA HEAD, 120-277 VOLT # JXM-ST110 - LED COBRA HEAD, 480 VOLT

*FIXTURES MUST HAVE BEEN OR BE SUBMITTED TO CITY OF WACO FOR INFIELD TESTING. TESTED AND APPROVED LIGHTS LISTED IN SECTION 1.1.
**ORIGINAL TESTED FIXTURES WERE LED ILLUMINATION 150W, 225W, CURRENT EQUIVALENT.

1.1 TESTED AND APPROVED LED FIXTURES:

250W EQUIVALENT:	400W EQUIVALENT:
EOI 150W (#ESL-02A011S15065A)	DURALIGHT 180W (#JXM-ST180)
PRUF 112W (#230-01)**	PRUF 168W (#240-01)**
LEOTEK 109W (#SL-250WLM3-FX)	LEOTEK 166W (#SL-400WLM3-FX)
	PHILLIPS HADCO EVOLAIRE 130W #WL130N)

2.0 ANCHOR BOLTS:
FOUR HIGH STRENGTH 1" STEEL ANCHOR BOLTS SHALL BE FURNISHED WITH EACH POLE. ANCHOR BOLTS SHALL BE FABRICATED FROM A GOOD COMMERCIAL QUALITY HOT ROLLED CARBON STEEL BAR WITH MINIMUM YIELD STRENGTH OF 50,000 PSI. EACH ANCHOR BOLT SHALL BE THREADED AT THE TOP AND FITTED WITH DOUBLE NUTS AND WASHERS. THE OTHER END OF THE BOLT SHALL HAVE AN "L" BEND. THE ANCHOR BOLTS SHALL BE OF SUFFICIENT LENGTH AND DIAMETER TO DEVELOP THE FULL STRENGTH OF THE SHAFT. THE THREADED END OF THE BOLT SHALL BE GALVANIZED A MINIMUM LENGTH OF 8" FROM THE THREADED END WITH A MINIMUM THREADED LENGTH OF 6". **ALL NECESSARY ANCHOR BOLTS AND TEMPLATES FOR SETTING ANCHOR BOLTS SHALL BE FURNISHED IMMEDIATELY AFTER AWARD OF THE CONTRACT, REGARDLESS OF DELIVERY SCHEDULES OF THE POLES**. ADDITIONAL HARDWARE SHALL BE PROVIDED AND MAY BE DELIVERED WITH THE POLES.

ANTIQUE/SHOEBOX LIGHT & ASSOC. ITEMS SPECS. (LED)

3.0 PHOTOELECTRIC CONTROL:
THE PHOTOELECTRIC CELLS SHALL BE TWIST PLUG IN TYPE PRECISION BRAND TO MATCH FIXTURE OR CONTACTOR VOLTAGE.

4.0 ELECTRICAL SERVICE EQUIPMENT:
ELECTRICAL SERVICE EQUIPMENT SHALL INCLUDE, BUT NOT BE LIMITED TO; METERED SERVICE/DISCONNECT OR CONTACTOR ENCLOSURE. ALL ENCLOSURES HOUSING ELECTRICAL EQUIPMENT SHALL BE RAIN-TIGHT, INCLUDE A PADLOCK HANDLE, AND DESIGNED FOR OUTDOOR INSTALLATION IN ACCORDANCE WITH NEMA STANDARDS. THE LIGHTING INSTALLATIONS SHALL COMPLY WITH THE APPLICABLE PROVISIONS OF THE NATIONAL ELECTRICAL SAFETY CODE AND NATIONAL ELECTRIC MANUFACTURERS ASSOCIATION SPECIFICATIONS. A STANDALONE, PEDESTAL TYPE COMBINATION METERED SERVICE/DISCONNECT/CONTACTOR CONTROL PANEL SHALL BE USED. THE PEDESTAL TYPE METER SERVICE MAY BE MOUNTED TO A CONCRETE PAD, ALTHOUGH A PRE CAST POLYMER PAD BASE IS RECOMMENDED. **POWER REQUIREMENTS DESIRED SHOULD BE 120/240V OR 208/120V SINGLE PHASE.** IF NOT AVAILABLE, AN OPTIONAL SERVICE VOLTAGE MAY BE ACCEPTABLE IF APPROVED BY CITY STAFF. EACH SERVICE POINT SHALL INCLUDE INDIVIDUAL CIRCUIT BREAKERS AND PHOTOCELL CONTROLLED CONTACTOR(S), AND A HOA SWITCH FOR CONTROL OF THE LIGHTING CIRCUIT(S). METER SERVICES SHALL REQUIRE A NO FEE ELECTRICAL PERMIT AND BE INSPECTED BY CITY OF WACO INSPECTION SERVICES. ELECTRIC METER, APPLICATION FOR SERVICE WILL BE MADE BY CITY STAFF. THE COLOR OF THE ELECTRICAL SERVICE EQUIPMENT SHALL BE MANUFACTURES STANDARD LIGHT OR MINT GREEN.

RECOMMENDED, ONCOR APPROVED, SERVICE PEDESTALS ARE MILBANK BRAND:

- CP3B1110VASP 120/240V 1P 3W 100A (MAY BE 120/208V WHEN NECESSARY)
- CP3B12519A22SP 208/120V 3P 4W 100A (SPECIAL USE ONLY)
- CP3B1141FA22SP 480/277V 1P 3W 100A

RECOMMENDED SERVICE PEDESTAL BASE IS QUAZITE BRAND:

- PB25251212500

5.0 WIRE:
ALL ELECTRICAL WIRE SHALL BE STRANDED COPPER CONDUCTOR. EARTH GROUND SHALL BE STRANDED COPPER CONDUCTOR WITH GREEN INSULATION. ALL WIRE SHALL BE OF ADEQUATE SIZE TO ACCOMMODATE LIGHTING LOAD. ALL SPLICES SHALL BE MADE INSIDE THE POLE.

6.0 CONCRETE:
SEE STANDARD DETAIL G-10 GENERAL CONCRETE AND REINFORCEMENT NOTES.

7.0 FOUNDATION BASE
ALL FOUNDATION BASES SHALL BE (24) TWENTY-FOUR INCHES IN DIAMETER. TOP OF BASES SHALL EXTEND (6) SIX INCHES ABOVE GRADE. TOP OF FOUNDATION SHALL HAVE A 1" CHAMFER. STEEL REBAR SHALL BE USED TO FOR CONCRETE REINFORCEMENT THROUGHOUT THE ENTIRE BASE. ALL FOUNDATIONS SHALL HAVE A MINIMUM OF TWO 2" PVC CONDUITS INSTALLED.

- FOR AREA LIGHTING POLES IN EXCESS OF (18) EIGHTEEN FEET IN HEIGHT, BASES SHALL EXTEND A MINIMUM OF (6) SIX FEET BELOW GRADE.
- FOR DECORATIVE POLES NOT TO EXCEED (18) EIGHTEEN FEET, BASES SHALL EXTEND A MINIMUM OF (3) THREE FEET BELOW GRADE.

EXCEPTION: FOR PARKING LOT INSTALLATIONS, ALL BASES SHALL BE (30) THIRTY INCHES IN DIAMETER AND EXTEND A MINIMUM OF (36) THIRTY-SIX INCHES ABOVE GRADE. BELOW GRADE SPECIFICATIONS SHALL REMAIN AS STATED ABOVE.

ANTIQUE/SHOEBOX LIGHT & ASSOC. ITEMS SPECS. (LED)

8.0 FUSE HOLDERS AND FUSES:
IN-LINE FUSE HOLDERS ELASTIMOLD OR BUCHANAN, STYLE D65 (DOUBLE FUSE) WITH BUSSMAN FNM-TYPE FUSES, OF THE APPROPRIATE AMPERAGE SHALL BE INSTALLED AT THE BASE OF EACH POLE INSIDE THE HAND HOLE. FUSING IN FIXTURE SHALL NOT BE ALLOWED.

9.0 CABLE CONNECTIONS AND SPLICES:
CABLE CONNECTIONS AND SPLICES SHALL BE MADE INSIDE THE POLE WITH SPLIT BOLT CONNECTORS AND INSULATED WITH #23 3M RUBBER TAPE, OR APPROVED EQUAL THEN WRAPPED WITH #88 3M VINYL TAPE, OR APPROVED EQUAL. NO SPLICES MAY BE MADE OUTSIDE THE POLE OTHER THAN INSIDE THE SERVICE/DISCONNECT OR CONTACTOR ENCLOSURE.

10.0 GROUND RODS:
GROUND RODS SHALL BE INSTALLED IN EACH POLE FOUNDATION AND AT THE POINT OF SERVICE DISCONNECT. THE GROUND RODS SHALL BE MINIMUM 8' X 5/8" COPPER-CLAD. ALL GROUND RODS AT POLE FOUNDATIONS SHALL BE INSTALLED IN THE CONCRETE FOUNDATION AND AT AN ANGLE AS TO PENETRATE THE SOIL ON THE SIDE OF THE FOUNDATION. A MINIMUM OF 4'' AND A MAXIMUM OF 6'' OF GROUND ROD SHALL EXTEND ABOVE THE TOP OF THE CONCRETE FOUNDATION FINISHED GRADE. INSTALLATIONS OUTSIDE THE FOUNDATION ARE NOT ACCEPTABLE.

11.0 EQUIPMENT GROUNDING:
ALL POLES, GROUND RODS, ELECTRIC SERVICE AND ASSOCIATED EQUIPMENT SHALL BE BONDED BY MEANS OF A COPPER GROUNDING CONDUCTOR. GROUNDING OF POLES BY MEANS OF ANCHOR BOLTS SHALL NOT BE PERMITTED. POLE GROUNDING SHALL BE ACCOMPLISHED BY MEANS OF A GROUNDING LUG; SCREW ETC. ATTACHED TO THE POLE.

12.0 GROUND (JUNCTION) BOXES:
ELECTRICAL, IN GROUND, NON-CONDUCTIVE JUNCTION BOXES WITH BOLT DOWN REMOVABLE LIDS SHALL BE UTILIZED. LIDS SHALL BE PERMANENTLY MARKED ON THE TOP ''ELECTRICAL.

RECOMMENDED BOXES ARE QUAZITE BRAND:

#PC1212BA12	SIZE 12'' X 12''
#PC1324BA12	SIZE 13'' X 24''
#PC1730BA12	SIZE 17'' X 30''

13.0 ELECTRICAL CONDUIT MINIMUM REQUIREMENTS:
SCHEDULE 40 GRAY ELECTRICAL PVC
2'' MINIMUM FOR POLE TO POLE AND HOME RUNS
SERVICE CONDUIT 2'' PVC 24'' RADIUS

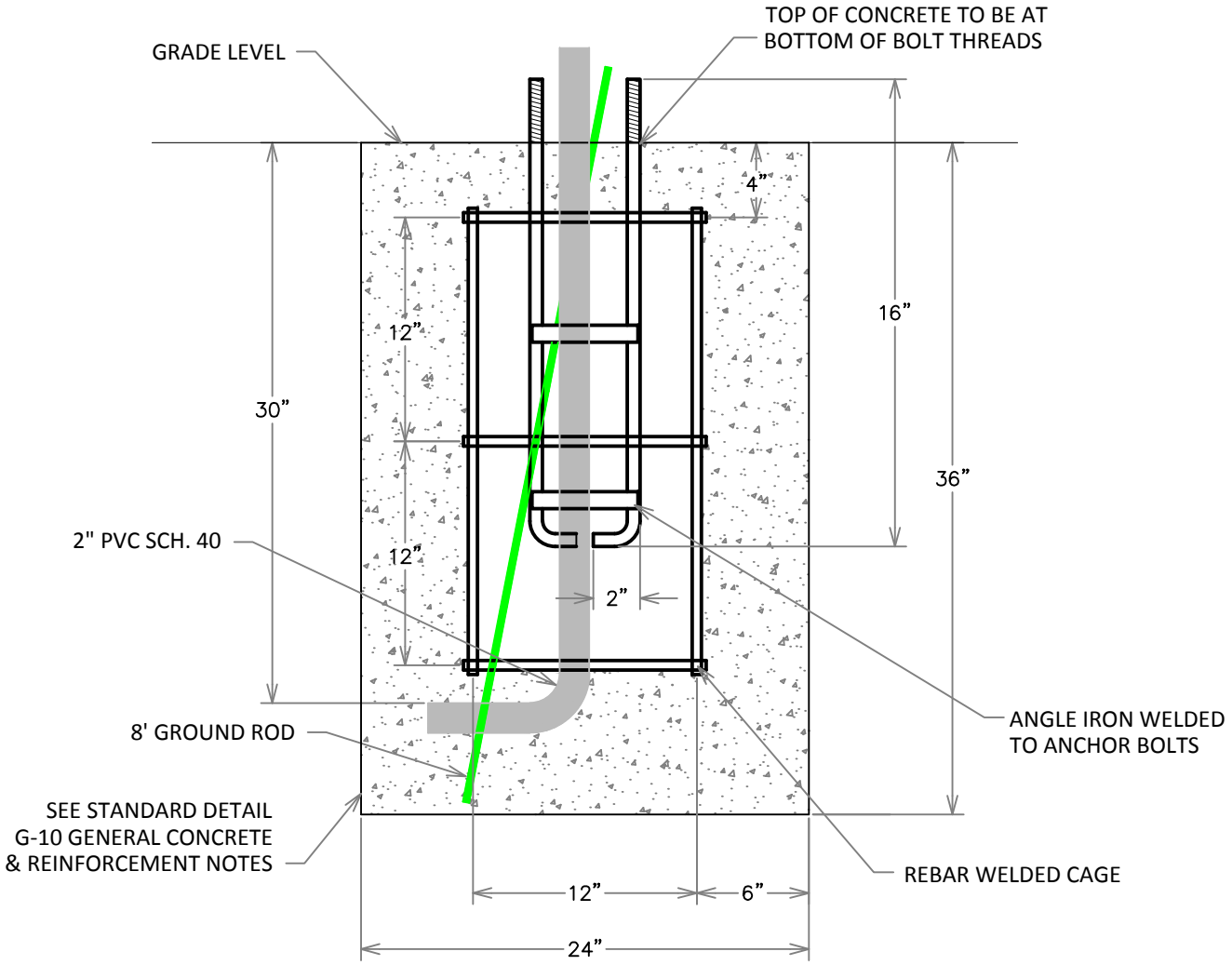

SECTION VIEW

ANTIQUE STREET LIGHT REINFORCED FOUNDATION

WACO

TRAFFIC SERVICES

REVISIONS

NO.	COMMENTS	BY	DATE
1	REMOVE SEAL	DG	09/03/2014

BOOK PAGE NUMBER 0000

DATE 09/03/2014

T-4

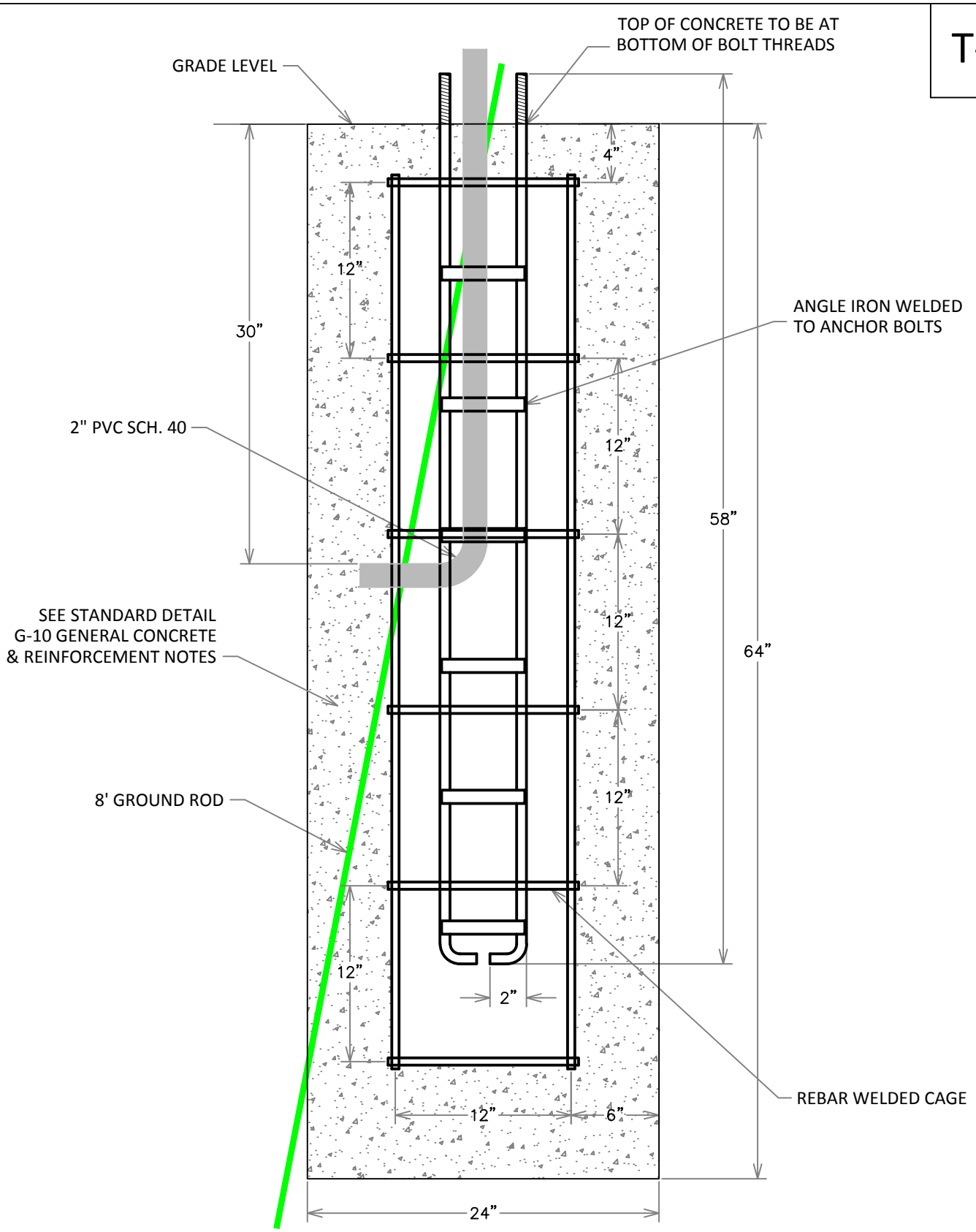

SHOE BOX STREET LIGHT REINFORCED FOUNDATION

SECTION VIEW

WACO

TRAFFIC SERVICES

REVISIONS

NO.	COMMENTS	BY	DATE
1	REMOVE SEAL	DG	09/03/2014

BOOK PAGE NUMBER 0000

DATE 09/03/2014

ELECTRICAL NOTES:

1. ALL CONDUIT TO BE GRAY PVC ELECTRICAL CONDUIT, SCHEDULE 40.
2. VERIFY LOCATIONS OF EXISITING UTILITIES BEFORE EXCAVATION.
3. ALL PULL BOXES ARE TO BE ACCORDING TO CITY OF WACO STANDARDS. SEE SPECIFICATIONS.
4. ALL STREET AND DRIVEWAY CROSSINGS MUST BE BORED. MINIMUM DEPTH OF 24".
5. CONDUCTOR SIZE TO BE (2) #10 BLACK CONDUCTOR, (1) #12 GREEN CONDUCTOR, AND (1) SERVICE WIRE - #6 MINIMUM.
6. CONDUIT RUNS BETWEEN POLES TO BE 2" MIN. GRAY ELECTRICAL CONDUIT, SCHEDULE 40. CONDUIT RUNS UNDER STREET TO BE 2" MIN. GRAY ELECTRICAL CONDUIT, SCHEDULE 40. SEE PLAN DETAIL.
7. FUSES TO BE INSTALLED IN ALL POLES. SEE SPECIFICATIONS.

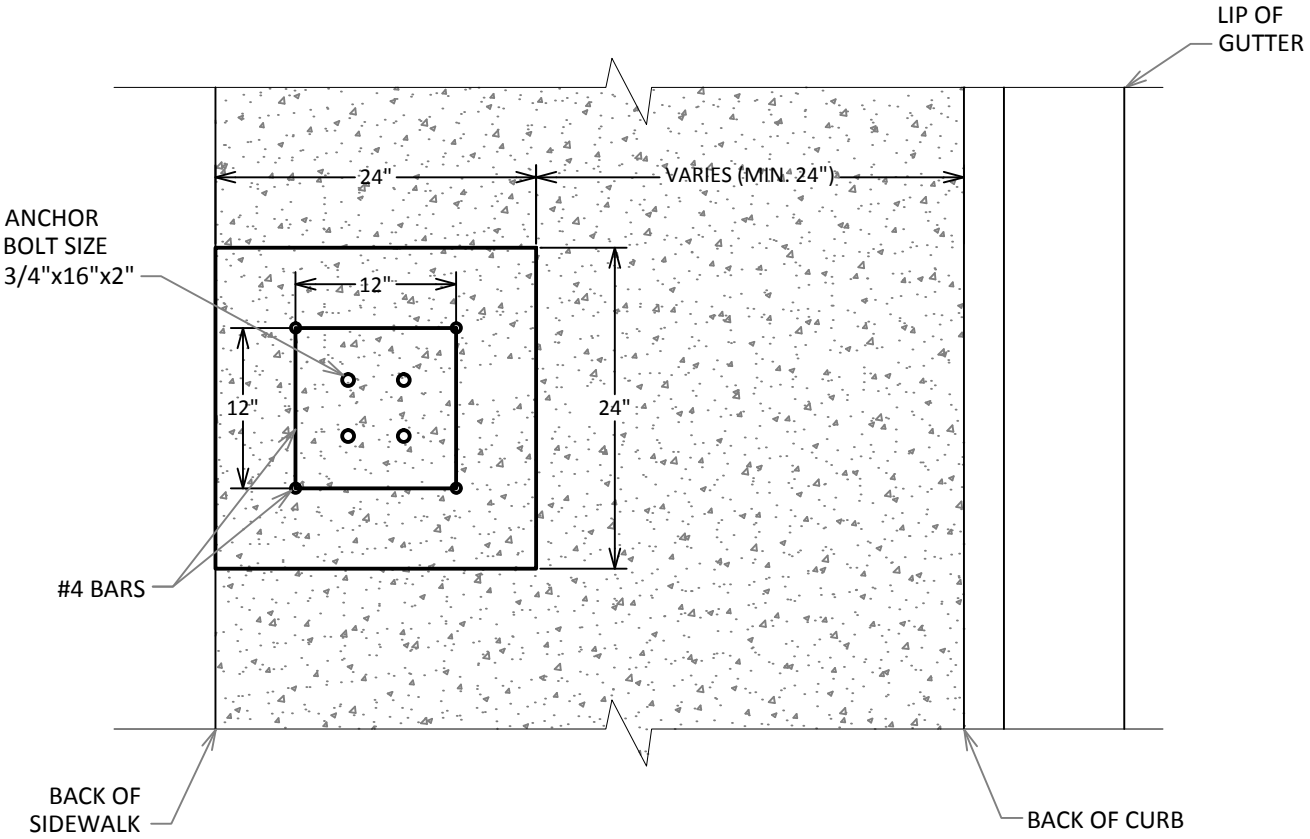

PLAN VIEW

STREET LIGHT FOUNDATION PLACEMENT IN SIDEWALK

WACO

TRAFFIC SERVICES

REVISIONS

NO.	COMMENTS	BY	DATE
1	REMOVE SEAL	DG	09/03/2014

BOOK PAGE NUMBER 0000

DATE 09/03/2014

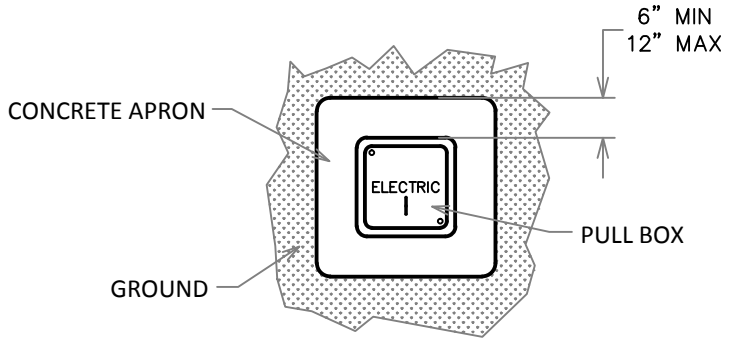

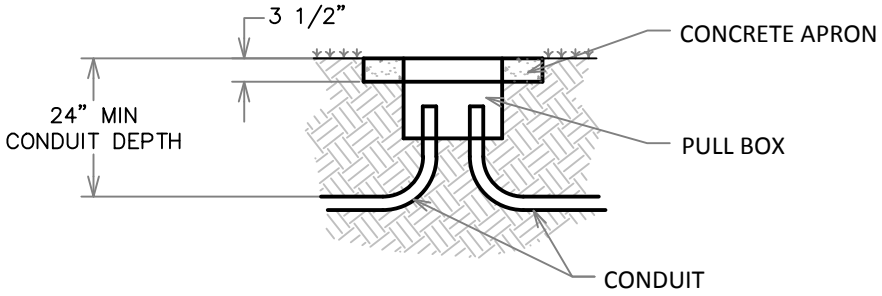

QUAZITE JUNCTION BOX: LID ENGRAVED WITH THE WORD "ELECTRIC"

#PC1212BA12	SIZE 12" X 12"
#PC1324BA12	SIZE 13" X 24"
#PC1730BA12	SIZE 17" X 30"

ELECTRICAL PULLBOX INSTALLATION DETAIL

WACO

TRAFFIC SERVICES

REVISIONS

NO.	COMMENTS	BY	DATE
1	REMOVE SEAL	DG	09/03/2014

BOOK PAGE NUMBER 0000

DATE 09/03/2014

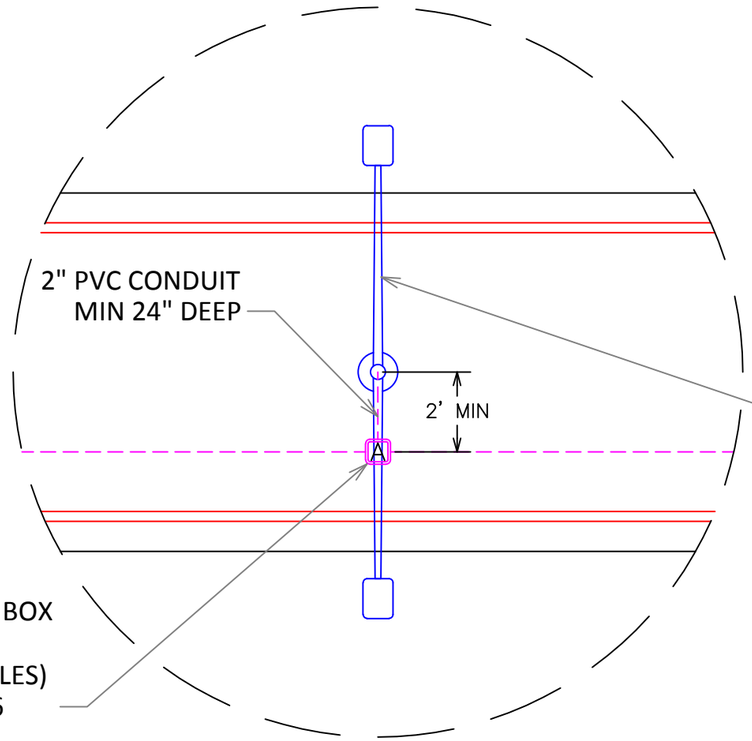

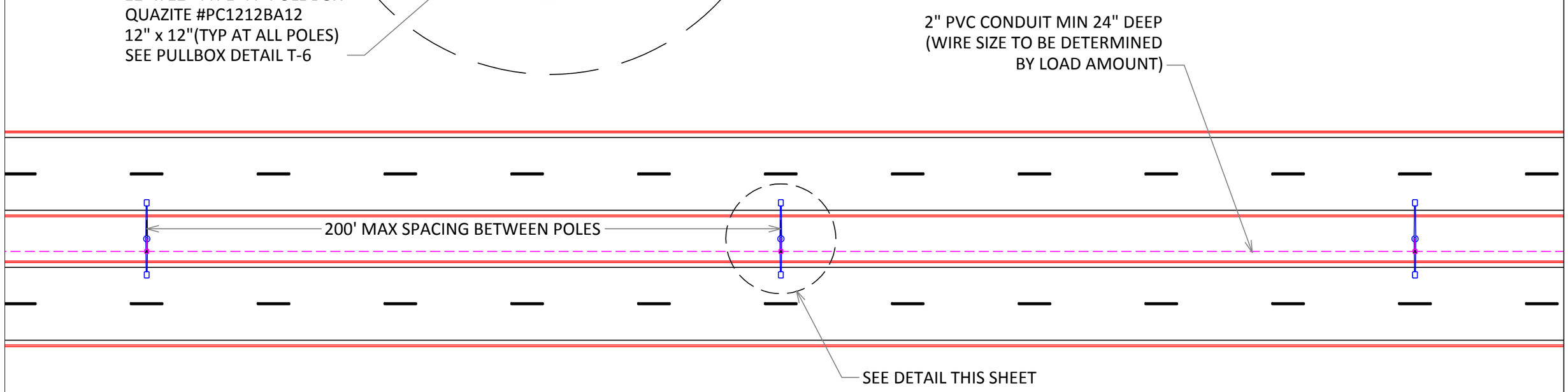

ROADWAY LIGHTING LAYOUT DETAIL

WACO

TRAFFIC SERVICES

REVISIONS

NO.	COMMENTS	BY	DATE
1	REMOVE SEAL	DG	09/03/2014

BOOK PAGE NUMBER 0000

DATE 09/03/2014

TYPICAL CONSTRUCTION &
INSTALLATION DETAILS

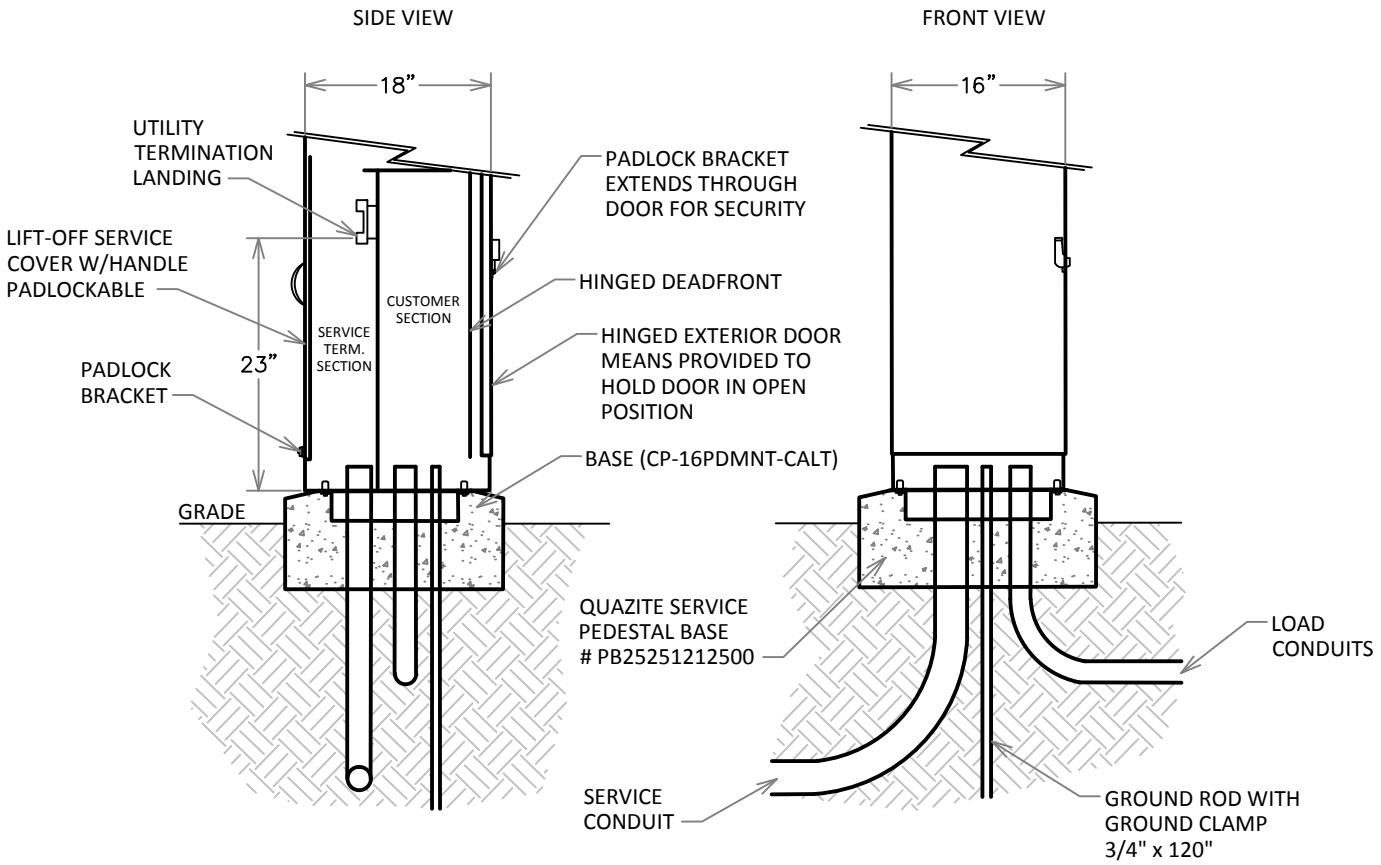

MOUNTING BASE DETAIL
TOP VIEW

36" MINIMUM PEDESTAL CLEARANCE TYPICAL. FRONT AND BACK REQUIRED PER N.E.C. 110-16

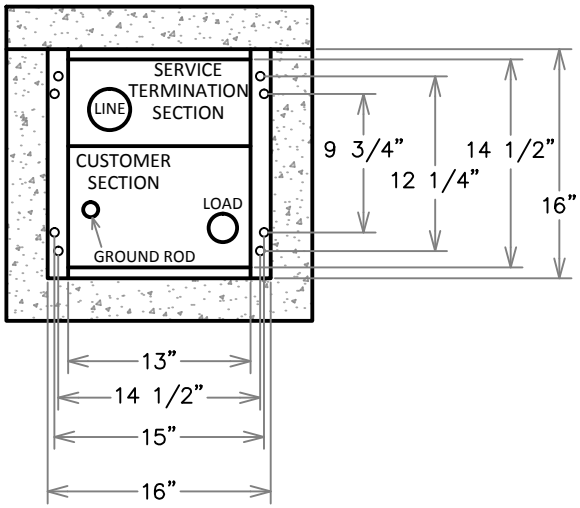

MILBANK SERVICE PEDESTAL

CP3B "ML" SERIES

WACO

TRAFFIC SERVICES

REVISIONS

NO.	COMMENTS	BY	DATE
1	REMOVE SEAL	DG	09/03/2014

BOOK PAGE NUMBER 0000

DATE 09/03/2014

TYPICAL INSTALLATION INSTRUCTIONS:

(1) ANCHOR SHOULD BE INSTALLED PARALLEL TO TRUE VERTICAL AND NOT SLOPE OF CONCRETE SURFACE.

(2) PRIOR TO POURING CONCRETE AROUND ANCHOR, TOP OF ANCHOR SHALL BE COVERED WITH DUCK TAPE OR OTHER MEANS TO PREVENT FILLING OF INSIDE ANCHOR.

(3) THE ANCHOR SHOULD BE INSTALLED HORIZONTALLY WITH RESPECT TO FINAL SIGN POST ORIENTATION (90° OR 45°).

(4) IN A RETROFIT SITUATIONS, A 3" DIAMETER HOLE WILL MINIMIZE PATCHING AREA.

(5) LATERAL OFFSET FROM FACE OF CURB IS DETERMINED BY 1/2 FINAL SIGN FACE HORIZONTAL SIZE PLUS 2 FT.

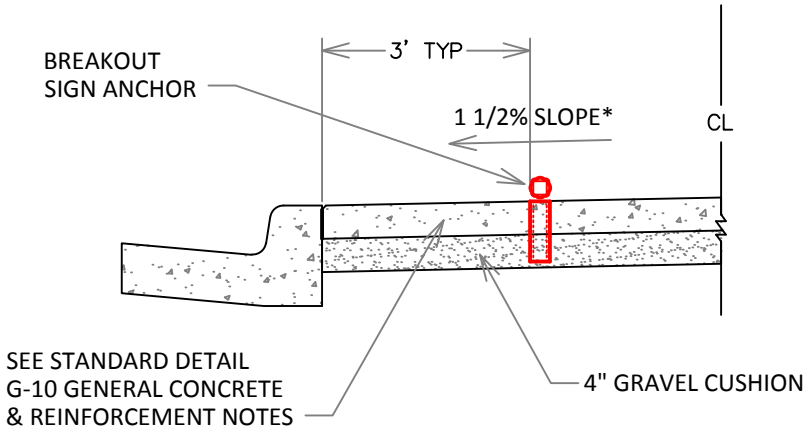

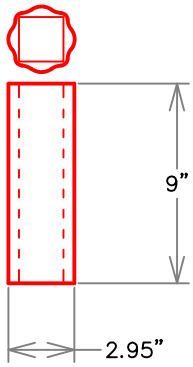

BREAKOUT SIGN
ANCHOR DETAIL

*OR OTHER SLOPE AS SPECIFIED BY ENGINEER

CONCRETE SIGN ANCHOR INSTALLATION (TYP.)

WACO

TRAFFIC
SERVICES

REVISIONS

NO.	COMMENTS	BY	DATE
1	REMOVE SEAL	DG	09/03/2014

BOOK PAGE NUMBER
0000

DATE
09/03/2014

COW Roundabout Curb RA1

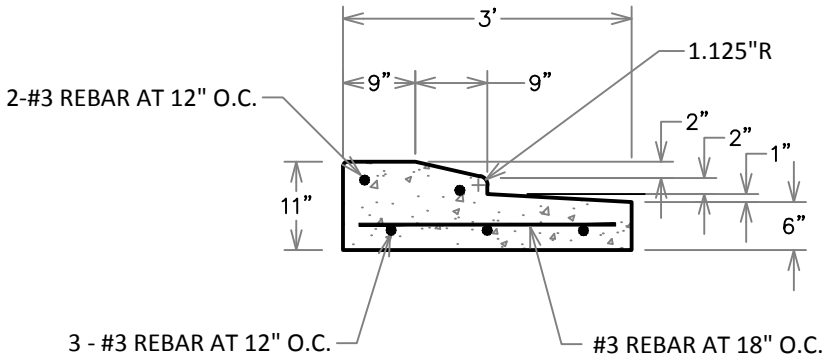

COW Roundabout Curb RA2

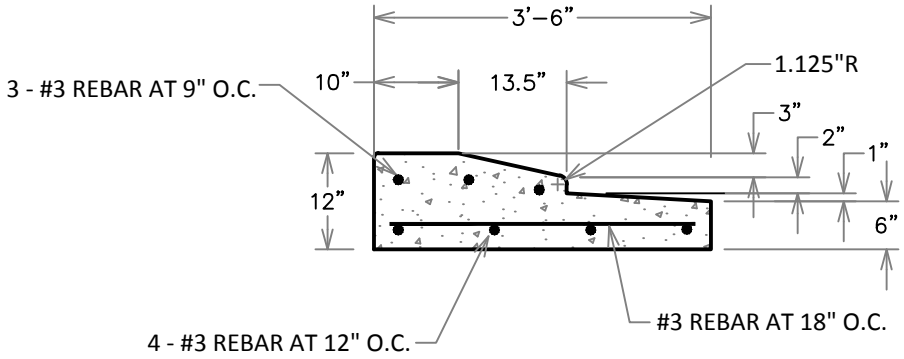

COW Roundabout Curb RA3

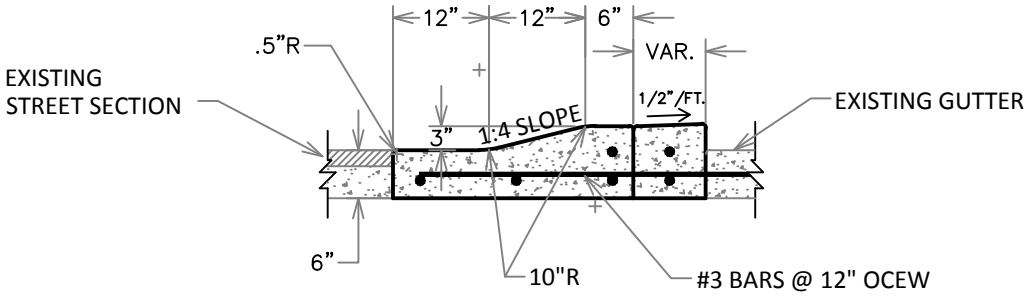

NOTE:
RA2 & RA3 ONLY TO BE USED IF APPROVED BY CITY TRAFFIC ENGINEER.

ROUNDABOUT CURB DETAILS

WACO

TRAFFIC SERVICES

REVISIONS

NO.	COMMENTS	BY	DATE
1	REMOVE SEAL	DG	09/03/2014

BOOK PAGE NUMBER 0000

DATE 09/03/2014