COLORS
NAVY - PMS 276 OR C=100 M=100 Y=0 K=58
WHITE

FONTS
ARIAL BOLD

NOTES:

1. CITY OF WACO AND *BETTER STREETS WACO* LOGOS SHALL BE OBTAINED FROM THE CITY OF WACO.
2. SIGNS SHALL BE MADE OF ALUMINUM COMPOSITE MATERIAL, SUCH AS DIBOND™, SIGNBOND™ OR SIMILAR.
3. SIGNS SHALL BE MOUNTED ON SKID MOUNTED WOOD SIGN SUPPORTS AS SHOWN.
4. NAILS MAY NOT BE USED IN THE ASSEMBLY OF WOODEN SIGN SUPPORTS. 3/8 IN. X 3 ½ IN. LAG SCREWS SHALL BE USED ON EVERY JOINT FOR FINAL CONNECTION.
5. SEE CURRENT TXDOT BARRICADE AND CONSTRUCTION TEMPORARY SIGN NOTES BC (4) FOR SIGN SUPPORT WEIGHTS.
6. SIGNS SHALL BE PLACED IN PROMINENT LOCATION, ALONG THE MOST MAJOR THOROUGHFARE, WITHIN THE PROJECT LIMITS.
7. SIGNS SHALL HAVE THEIR OWN SUPPORT STRUCTURE AND BE ABLE TO WITHSTAND 75 MPH WINDS.
8. SUPPORT STRUCTURES / POSTS SHALL BE PAINTED WHITE.
9. SIGNS SHALL BE MAINTAINED THROUGHOUT DURATION OF CONSTRUCTION BY CONTRACTOR. SIGNS SHALL REMAIN CLEAN, LEGIBLE AND STRUCTURALLY SOUND. IF SIGNS ARE DAMAGED OR STOLEN, THEY SHALL BE REPLACED BY CONTRACTOR AS SOON AS POSSIBLE.
10. SIGNS SHALL BE INSTALLED AT LEAST ONE WEEK BEFORE CONSTRUCTION BEGINS AND REMOVED BY CONTRACTOR NO LATER THAN ONE WEEK AFTER FINAL ACCEPTANCE OF THE PROJECT.
11. COUNCIL MEMBERS PROPER NAMES SHALL BE ADDED TO SIGN AS PROVIDED BY PROJECT ENGINEER.

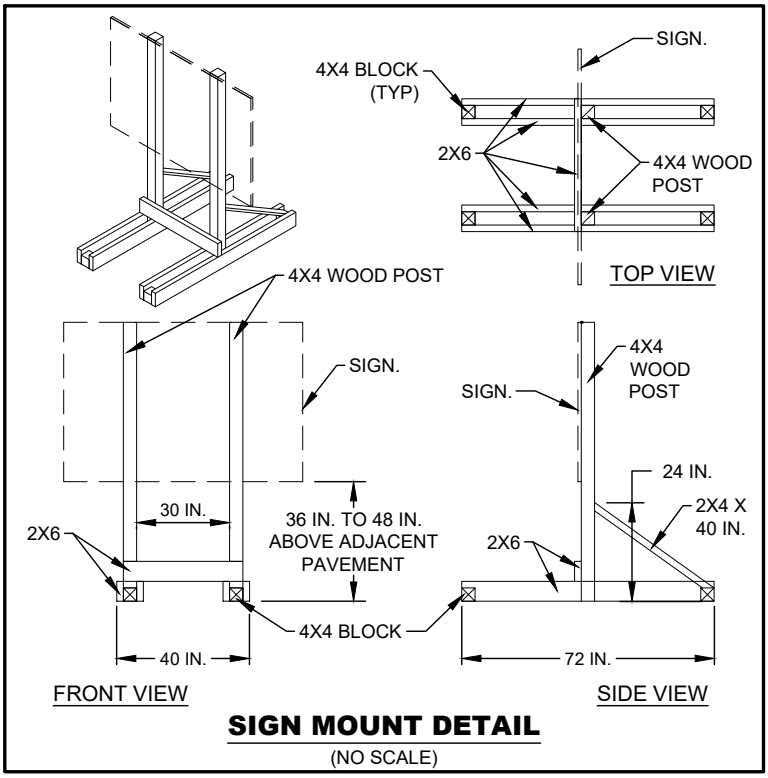

SIGN MOUNT DETAIL
(NO SCALE)

BETTER STREETS WACO PROJECT DESIGNATION SIGN

(NO SCALE)

CITY OF WACO

ENGINEERING DIVISION

DISCLAIMER: THE USE OF THIS STANDARD IS GOVERNED BY THE "TEXAS ENGINEERING PRACTICE ACT". NO WARRANTY OF ANY KIND IS MADE BY THE CITY OF WACO FOR ANY PURPOSE WHATSOEVER. THE CITY OF WACO ASSUMES NO RESPONSIBILITY FOR THE CONVERSION OF THIS STANDARD TO OTHER FORMATS OR FOR INCORRECT RESULTS OR DAMAGES RESULTING FROM ITS USE.

REVISIONS

NO.	COMMENTS	BY	DATE
##	DESCRIPTION	FL	MM/DD/YYYY

DATE
01/01/2024

G-4