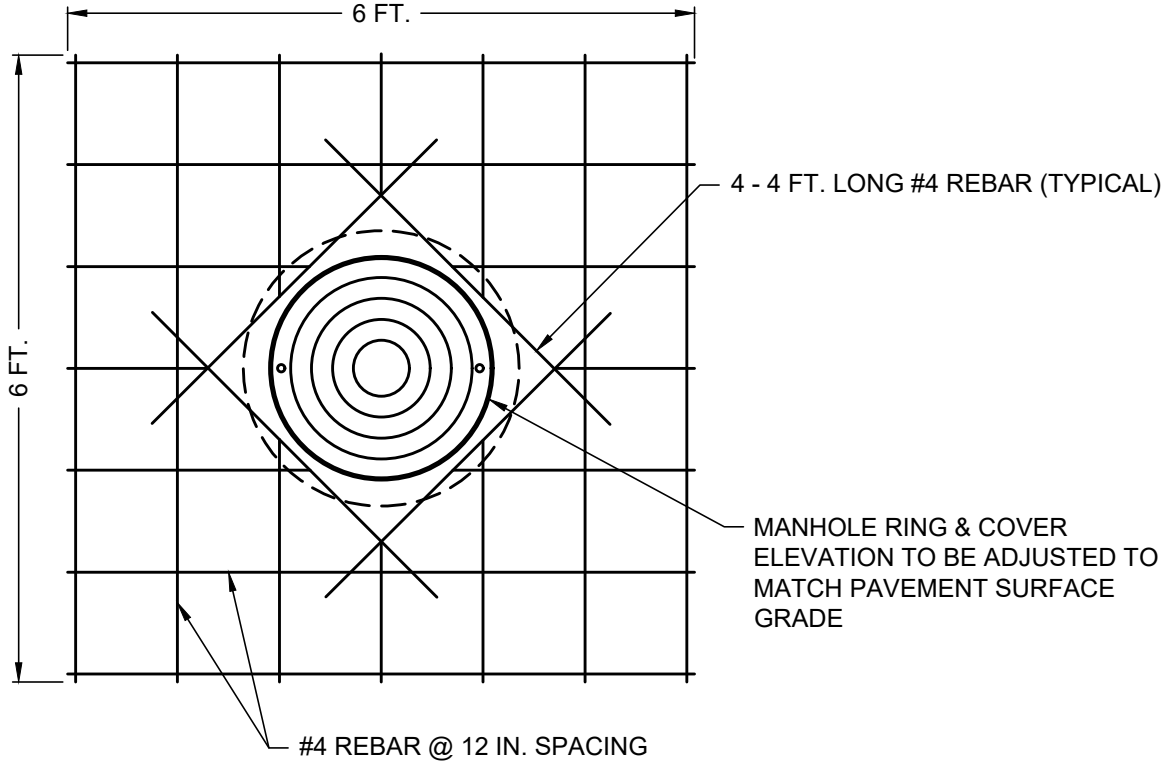

MANHOLE

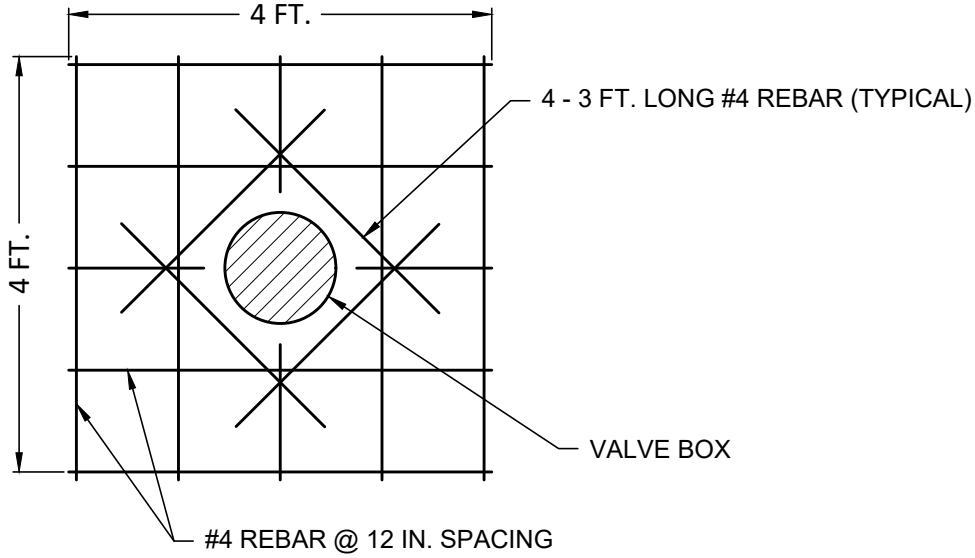

WATER VALVE

NOTES:

1. REINFORCING REBAR SHOWN ARE IN ADDITION TO REINFORCEMENT FOR STREETS ON PLANS.

MANHOLE & WATER VALVE COVER REINFORCING PLAN

(CONCRETE STREETS ONLY)
(NO SCALE)

CITY OF WACO

ENGINEERING DIVISION

DISCLAIMER: THE USE OF THIS STANDARD IS GOVERNED BY THE "TEXAS ENGINEERING PRACTICE ACT". NO WARRANTY OF ANY KIND IS MADE BY THE CITY OF WACO FOR ANY PURPOSE WHATSOEVER. THE CITY OF WACO ASSUMES NO RESPONSIBILITY FOR THE CONVERSION OF THIS STANDARD TO OTHER FORMATS OR FOR INCORRECT RESULTS OR DAMAGES RESULTING FROM ITS USE.

REVISIONS

NO.	COMMENTS	BY	DATE
##	DESCRIPTION	FL	MM/DD/YYYY

DATE
01/01/2024

ST-10