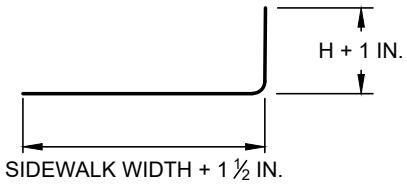

BARS A1
(#4 BARS @ 18 IN. OC)

BAR BENDING DIAGRAM

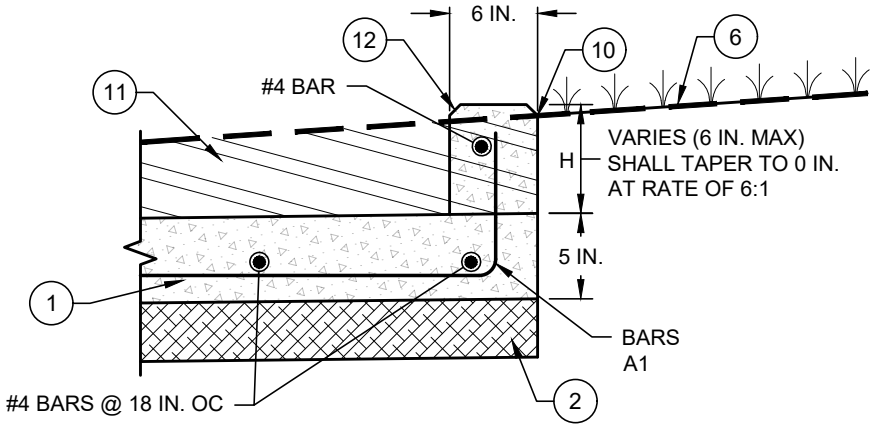

CURB TO MATCH EXISTING GRADE

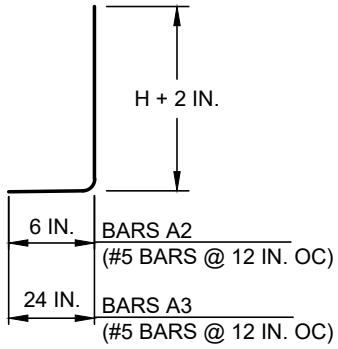

BAR BENDING DIAGRAM

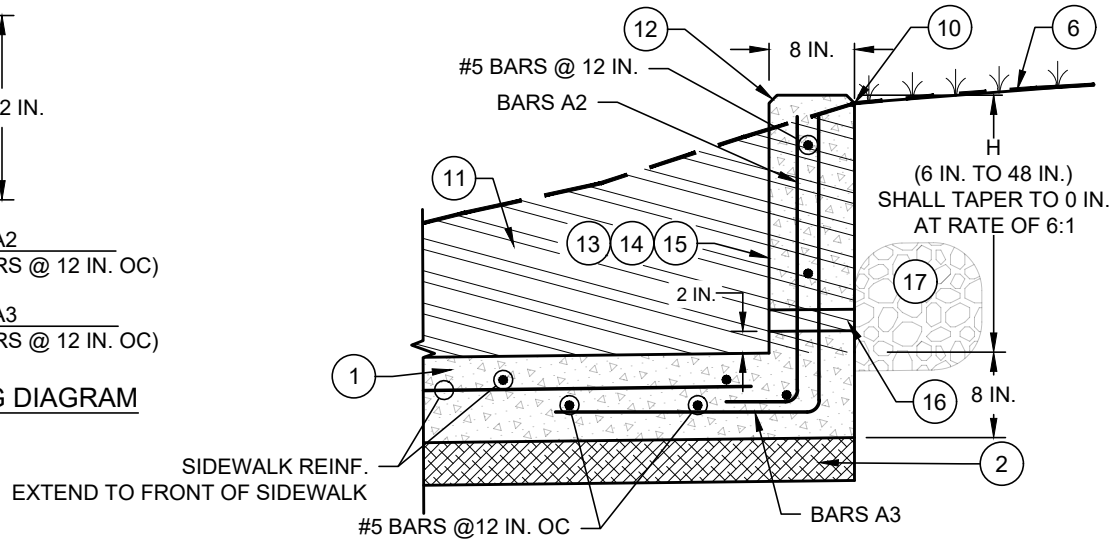

RETAINING WALL MATCH TO EXISTING GRADE

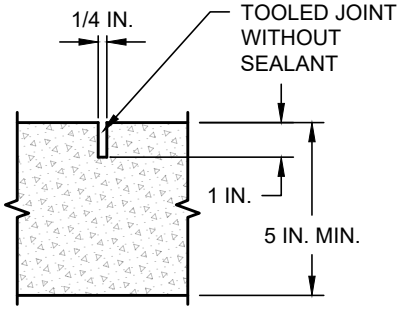

CONTRACTION JOINT

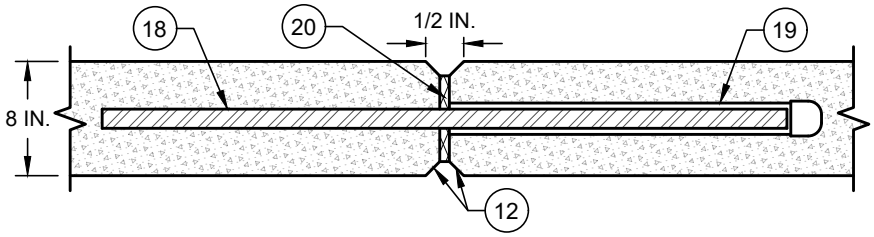

RETAINING WALL EXPANSION JOINT

FOR GENERAL NOTES SEE SHEET SW-1
FOR LEGEND DESCRIPTIONS SEE SHEET SW-2

SIDEWALK DETAILS - 2 OF 2

(NO SCALE)

CITY OF WACO

ENGINEERING DIVISION

DISCLAIMER: THE USE OF THIS STANDARD IS GOVERNED BY THE "TEXAS ENGINEERING PRACTICE ACT". NO WARRANTY OF ANY KIND IS MADE BY THE CITY OF WACO FOR ANY PURPOSE WHATSOEVER. THE CITY OF WACO ASSUMES NO RESPONSIBILITY FOR THE CONVERSION OF THIS STANDARD TO OTHER FORMATS OR FOR INCORRECT RESULTS OR DAMAGES RESULTING FROM ITS USE.

REVISIONS

NO.	COMMENTS	BY	DATE
##	DESCRIPTION	FL	MM/DD/YYYY

DATE
01/01/2024

SW-4