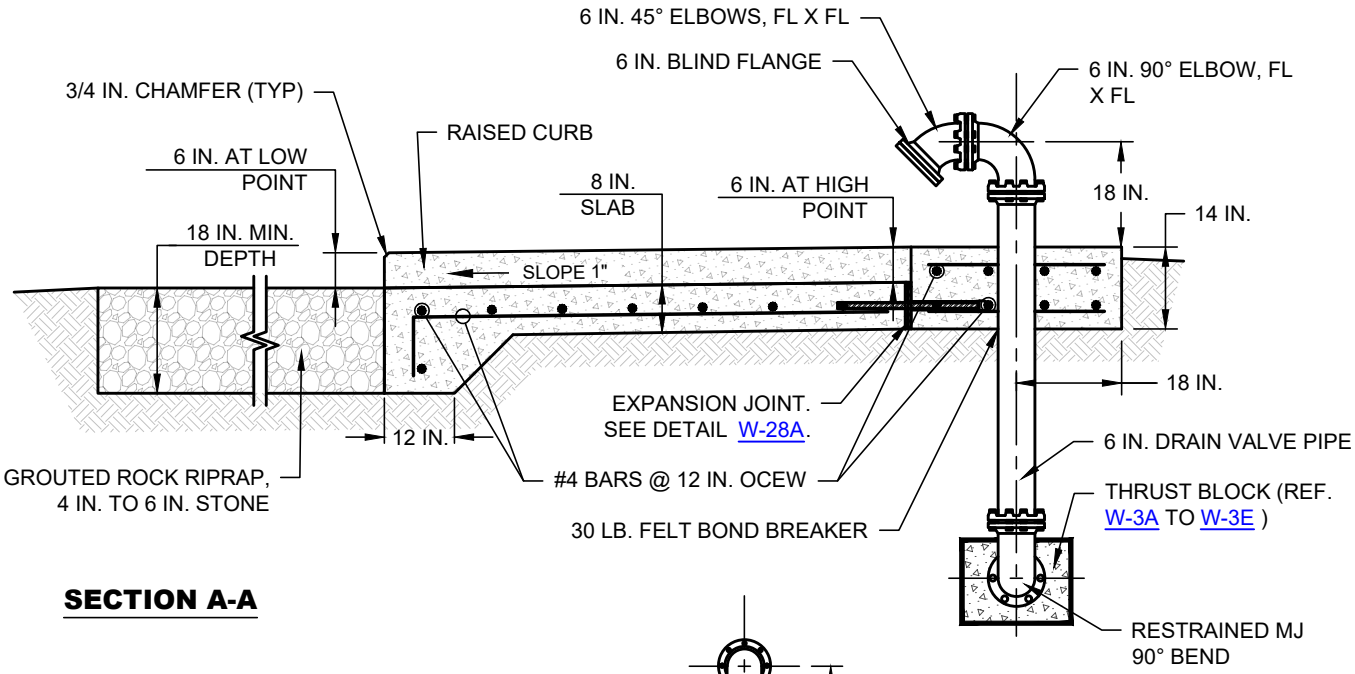

SECTION A-A

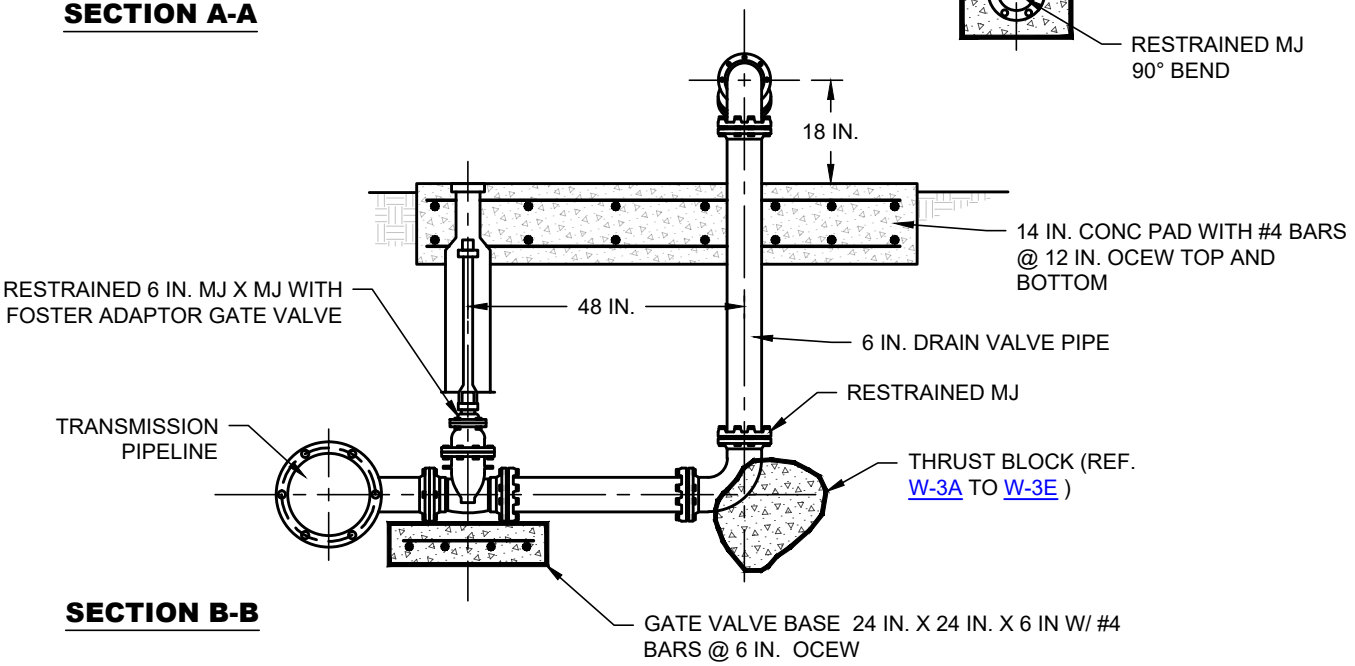

SECTION B-B

NOTES:

1. ABOVE GROUND PIPING SHALL BE FLANGED DUCTILE IRON.
2. THE FINAL LOCATIONS OF THE DUCTILE IRON BOLLARDS SHALL BE DETERMINED BY THE ENGINEER.
3. ALL CONCRETE SHALL BE 3000 PSI.
4. POLYWRAP ALL BURIED DUCTILE IRON PIPE, VALVES, AND FITTINGS.
5. ALL EXPOSED VERTICAL AND HORIZONTAL CONCRETE EDGES SHALL BE FORMED WITH 3/4 IN. CHAMFER.
6. DRAIN VALVE PIPING SHALL BE ORIENTED ON DOWN-HILL SIDE OF TRANSMISSION PIPELINE, OR ON OPPOSITE SIDE OF PIPELINE FROM PAVEMENT IN ROADWAYS, AS APPROVED BY THE ENGINEER OR AS SHOWN IN DRAWINGS.
7. FIELD PAINT EXPOSED PIPING WITH TNEMEC SERIES 46H-413 COAL TAR EPOXY AT 60.0 DRY MILS. PAINTING IS SUBSIDIARY TO PIPE.
8. ORIENTATION AND ELEVATION OF CONCRETE SPLASH PAD SHALL BE AS SHOWN ON DRAWINGS.
9. ALL EXPOSED DUCTILE IRON PIPE AND FITTINGS WITHIN MANHOLES SHALL HAVE FACTORY APPLIED ASPHALTIC COATING 1 MIL. THICK. ALL EXPOSED DUCTILE IRON PIPE ABOVE GRADE SHALL BE SHOP PRIMED AND COATED BY WATER UTILITY SERVICES.

ABOVE GROUND BLOW OFF ASSEMBLY

(NO SCALE)

SEE W-28A FOR ADDITIONAL DETAILS

CITY OF WACO

ENGINEERING DIVISION

DISCLAIMER: THE USE OF THIS STANDARD IS GOVERNED BY THE "TEXAS ENGINEERING PRACTICE ACT". NO WARRANTY OF ANY KIND IS MADE BY THE CITY OF WACO FOR ANY PURPOSE WHATSOEVER. THE CITY OF WACO ASSUMES NO RESPONSIBILITY FOR THE CONVERSION OF THIS STANDARD TO OTHER FORMATS OR FOR INCORRECT RESULTS OR DAMAGES RESULTING FROM ITS USE.

REVISIONS

NO.	COMMENTS	BY	DATE
##	DESCRIPTION	FL	MM/DD/YYYY

DATE 01/01/2024

W-28B