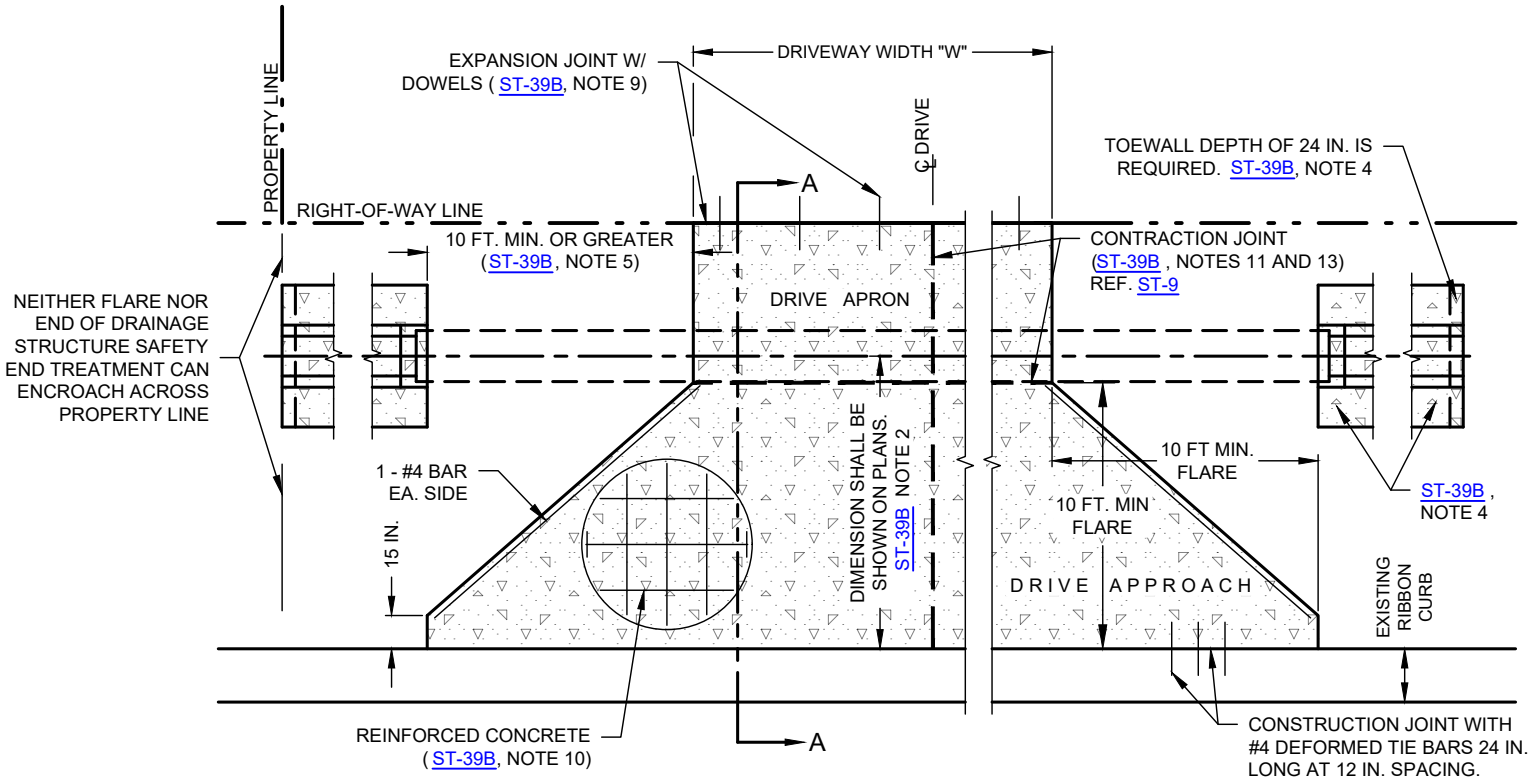

PLAN VIEW
(NO SCALE)

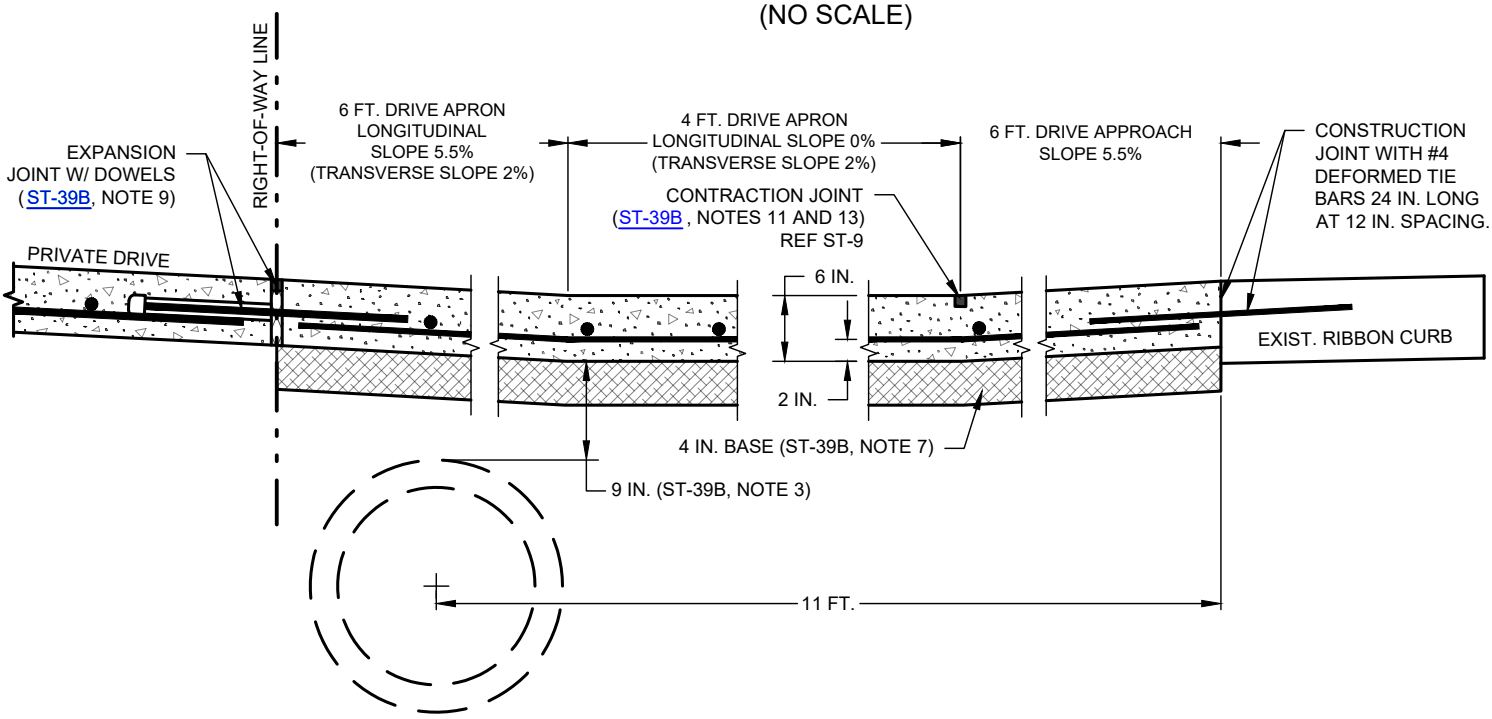

SECTION A - NEW APPROACH ON EXISTING RIBBON CURB
(NO SCALE)

RIBBON CURB RESIDENTIAL DRIVE APPROACH

(NO SCALE)

SEE ST-39B FOR ADDITIONAL DETAILS

CITY OF WACO

ENGINEERING DIVISION

DISCLAIMER: THE USE OF THIS STANDARD IS GOVERNED BY THE "TEXAS ENGINEERING PRACTICE ACT". NO WARRANTY OF ANY KIND IS MADE BY THE CITY OF WACO FOR ANY PURPOSE WHATSOEVER. THE CITY OF WACO ASSUMES NO RESPONSIBILITY FOR THE CONVERSION OF THIS STANDARD TO OTHER FORMATS OR FOR INCORRECT RESULTS OR DAMAGES RESULTING FROM ITS USE.

REVISIONS

NO.	COMMENTS	BY	DATE
##	DESCRIPTION	FL	MM/DD/YYYY

DATE
04/19/2024

ST-39A