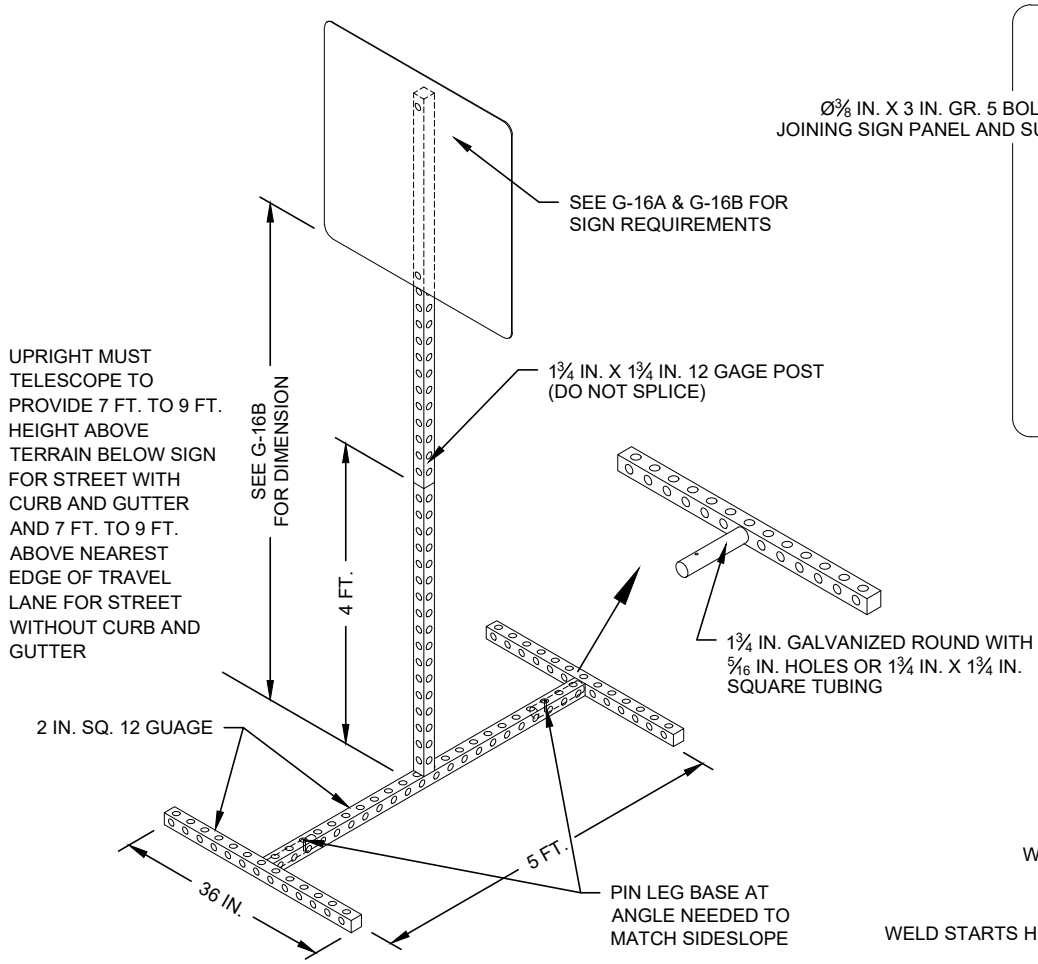

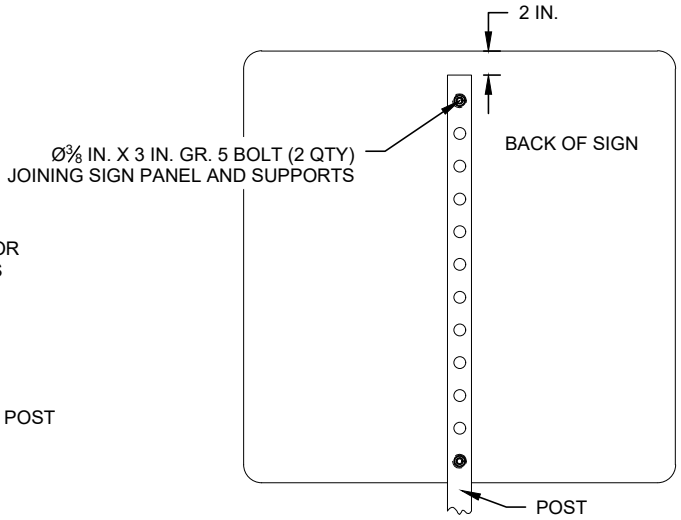

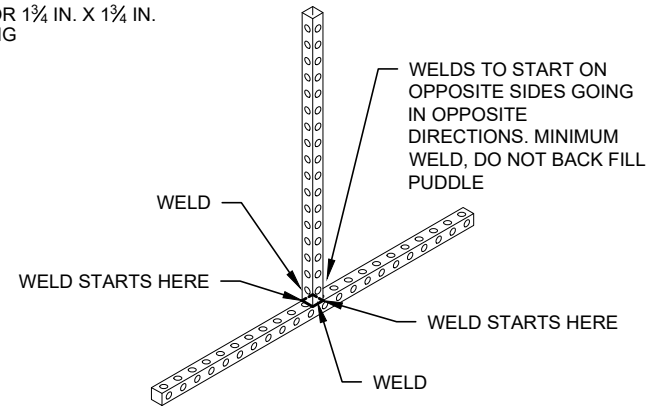

NOTES:

1. NO MORE THAN 2 SIGN POSTS SHALL BE PLACED WITHIN 7 FT. OF EACH OTHER.
2. WHERE SIGN SUPPORTS REQUIRE THE USE OF WEIGHTS TO REMAIN UPRIGHT, THE USE OF SANDBAGS WITH DRY, COHESIONLESS SAND SHOULD BE USED.
3. THE SANDBAGS WILL BE TIED SHUT TO KEEP THE SAND FROM SPILLING AND TO MAINTAIN A CONSTANT WEIGHT.
4. ROCK, CONCRETE, IRON, STEEL OR OTHER SOLID OBJECTS SHALL NOT BE PERMITTED FOR USE AS SIGN SUPPORT WEIGHTS.
5. SANDBAGS SHOULD WEIGH A MINIMUM OF 35 LBS AND A MAXIMUM OF 50 LBS.
6. SANDBAGS SHALL BE MADE OF A DURABLE MATERIAL THAT TEARS UPON VEHICULAR RUBBER (SUCH AS TIRE INNER TUBES) SHALL NOT BE USED.
7. SANDBAGS SHALL ONLY BE PLACED ALONG OR LAID OVER THE BASE OF THE TRAFFIC CONTROL DEVICE AND SHALL NOT BE SUSPENDED ABOVE GROUND LEVEL OR HUNG WITH ROPE, WIRE, CHAINS OR OTHER FASTENERS. SANDBAGS SHALL BE PLACED ALONG THE LENGTH OF THE BASE TO WEIGH DOWN THE SIGN SUPPORT.
8. SANDBAGS SHALL NOT BE PLACED UNDER THE BASE AND SHALL NOT BE USED TO LEVEL SIGN SUPPORTS PLACED ON SLOPES.

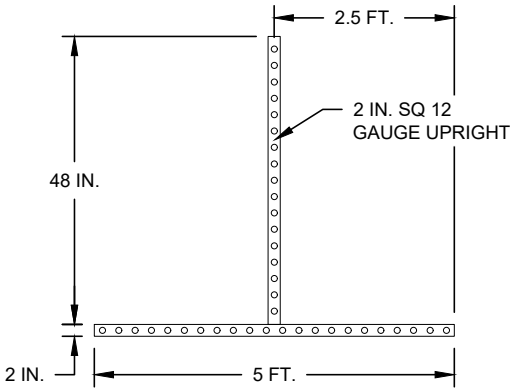

LEG BASE
SIDE VIEW

PERMITTEE CONSTRUCTION INFORMATION SIGN SUPPORT ASSEMBLY

(NO SCALE)

CITY OF WACO

ENGINEERING DIVISION

DISCLAIMER: THE USE OF THIS STANDARD IS GOVERNED BY THE "TEXAS ENGINEERING PRACTICE ACT". NO WARRANTY OF ANY KIND IS MADE BY THE CITY OF WACO FOR ANY PURPOSE WHATSOEVER. THE CITY OF WACO ASSUMES NO RESPONSIBILITY FOR THE CONVERSION OF THIS STANDARD TO OTHER FORMATS OR FOR INCORRECT RESULTS OR DAMAGES RESULTING FROM ITS USE.

REVISIONS

NO.	COMMENTS	BY	DATE
##	DESCRIPTION	FL	MM/DD/YYYY

DATE
01/01/2024

G-17