SOUTH 11TH STREET IMPROVEMENTS
WEBSTER AVE EAST CURBLINE IMPROVEMENTS
4TH STREET PEDESTRIAN IMPROVEMENTS

MAYOR
DILLON MEEK

CITY COUNCIL
ANDREA J. BAREFIELD - COUNCIL DIST. 1
ALICE RODRIGUEZ - COUNCIL DIST. 2
JOSH BORDERUD - COUNCIL DIST. 3
KELLY PALMER - COUNCIL DIST. 4
JIM HOLMES - COUNCIL. DIST. 5

CITY MANAGER
BRADLEY FORD

CITY OF WACO PUBLIC WORKS DEPARTMENT

STREETS DIVISION

C.O.W. PROJECT#: 18ST2212D

STREET FUNCTIONAL CLASSIFICATION

S. 11TH STREET: ARTERIAL
ADT(2022): 3,000

WEBSTER AVE: LOCAL
ADT(2022): 1,400

4TH STREET: ARTERIAL
ADT(2022): 3,200

STATE OF TEXAS
DAVID L. MAREK
#83327
REGISTERED PROFESSIONAL ENGINEER

PROJECT ENGINEER (COMPLETE & CORRECT) — **DATE** APRIL 14, 2023

DIRECTOR OF PUBLIC WORKS DEPARTMENT (APPROVED FOR BIDDING) — **DATE**

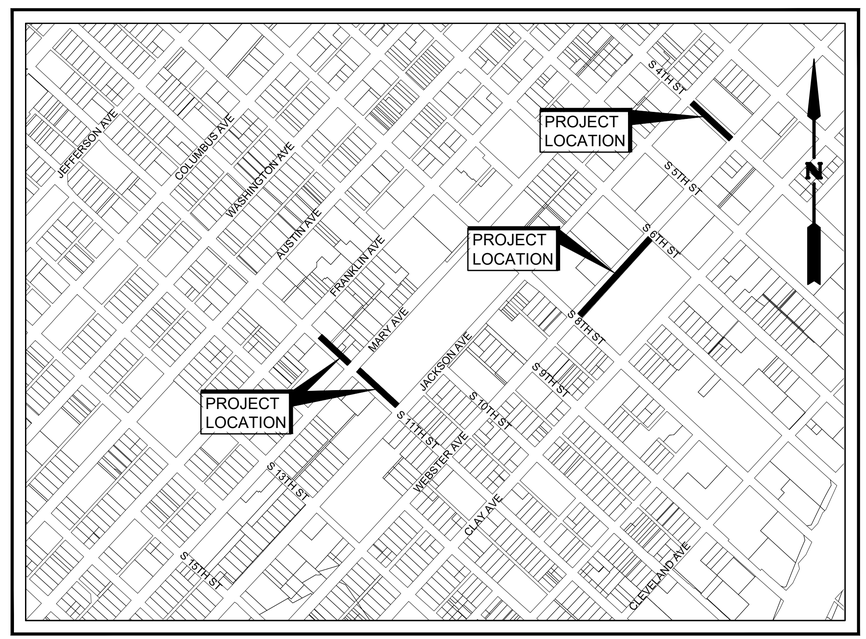

500 0 250 500 1000
(IN FEET)

TDLR REGISTRATION #: _____

APRIL 2023

CP&Y, INC.
TEXAS REGISTERED ENGINEERING FIRM F-1741

REVISIONS TO PLANS

REV	DATE	BY	DESCRIPTION	SHEETS MODIFIED

Know what's below. Call before you dig.

S. 11TH STREET IMP. (CWAC2200923), WEBSTER AVE E. CURBLINE IMP. (CWAC2200983), 4TH ST PED. IMP. (CWAC2300244)

G:\Projects\CWAC2200923-11th and Mary\08_Plans_Drawings\20_Sheets\2200923-C10-GI001.dwg, C000, x/12/2023 3:41:17 PM, 1:1

DRAWING INDEX

*THE STANDARD DETAILS SPECIFICALLY IDENTIFIED ON THIS SHEET HAVE BEEN SELECTED BY ME AND ARE APPLICABLE TO THIS PROJECT.

CP&Y, INC.
TEXAS REGISTERED ENGINEERING FIRM
TBPE F-1741

STATE OF TEXAS
DAVID L. MAREK
#83327
REGISTERED PROFESSIONAL ENGINEER
4-14-2023

NO.	REVISION	BY	DATE

VERIFY SCALE 0 1"
BAR LENGTH EQUALS ONE INCH ON ORIGINAL DRAWING. VERIFY LENGTH ON THIS SHEET AND ADJUST SCALE ACCORDINGLY

CITY OF WACO
SOUTH 11TH STREET IMPROVEMENTS

DRAWING INDEX

DESIGN: DLM
DRAWN: CDG
REVIEW: DLM
CP&Y: CWAC2200923
CLIENT:

SHEET
C100

PRINTED BY: emcdougald DATE: 4/14/2023
FILE PATH: G:\Projects\CWAC2200923-11th and Mary\08_Plans_Drawings\20_Sheets\2200923-C10-GI001.dwg, C100
G:\Projects\CWAC2200923-11th and Mary\08_Plans_Drawings\20_Sheets\2200923-C10-GI001.dwg, C100, 4/14/2023 11:51:52 AM, 1:1

GENERAL NOTES

ALL CONSTRUCTION SHALL BE IN ACCORDANCE WITH THE CITY OF WACO STANDARD SPECIFICATIONS FOR CONSTRUCTION (THE CURRENT VERSION) AND APPLICABLE CITY OF WACO MANUAL OF STANDARD DETAILS (WMSD) UNLESS OTHERWISE NOTED.

CONTRACT ADMINISTRATION
THE CONTRACT IS A WRITTEN AGREEMENT BY WHICH THE CONTRACTOR HAS COMMITTED TO COMPLETE THE SPECIFIC SCOPE OF WORK, IN COMPLIANCE WITH THE DRAWINGS, SPECIFICATIONS, SCHEDULE, AND ALL APPLICABLE LAWS, RULES AND REGULATIONS. COMPENSATION FOR SAID WORK SHALL BE MADE AS DESCRIBED IN THE AGREED-UPON PROPOSAL. ANY REQUEST FOR CHANGE TO THE DESIGN, SCHEDULE, OR PROJECT COST MUST BE MADE IN WRITING AND APPROVED PRIOR TO IMPLEMENTATION.

SUBMITTALS
THE CONTRACTOR SHALL SUBMIT, WITHIN 10 DAYS OF THE EFFECTIVE DATE OF THE NOTICE TO PROCEED, THE FOLLOWING:

- THE NAME AND CONTACT INFORMATION OF THE PROJECT SUPERINTENDENT;
- THE NAME AND CONTACT INFORMATION OF THE EMERGENCY CONTACT;
- THE NAME, QUALIFICATIONS, AND CONTACT INFORMATION OF THE DESIGNATED SAFETY REPRESENTATIVE(S);
- THE NAME AND CONTACT INFORMATION FOR THE DESIGNATED PROJECT MANAGER FOR THIS CONTRACT.

ENVIRONMENTAL AND SAFETY PLANS
THE CONTRACTOR SHALL SUBMIT FOR REVIEW ALL REQUIRED ENVIRONMENTAL AND SAFETY PLANS FOR THE COMPLETION OF THE WORK. THE WORK WILL NOT BE PERMITTED TO BEGIN UNTIL ALL RELATED PLANS HAVE BEEN REVIEWED BY THE APPROPRIATE PARTY(IES).

TRAFFIC CONTROL PLAN (TCP)
WHEN REQUIRED, THE CONTRACTOR IS RESPONSIBLE FOR SUBMITTING A TRAFFIC CONTROL PLAN FOR REVIEW. THE PLAN SHALL BE BASED UPON APPLICABLE CITY AND STATE REQUIREMENTS AND ESTABLISHED STANDARDS. THE CONTRACTOR IS RESPONSIBLE FOR MONITORING THE PLAN AS THE WORK PROGRESSES AND SUBMITTING MODIFICATIONS FOR REVIEW AS NEEDED. THE CONTRACTOR IS ALSO RESPONSIBLE FOR ENSURING THE INSPECTOR IS PROVIDED A COPY OF THE SIGNED PLAN 15 DAYS PRIOR TO BEGINNING WORK.

TRENCH SAFETY PLANS
THE CONTRACTOR SHALL COMPLY WITH ALL APPLICABLE RULES AND REGULATIONS. WHEN REQUIRED BY THE WORK, THE CONTRACTOR SHALL SUBMIT A TRENCH SAFETY PLAN FOR REVIEW. THE PLAN SHALL INCLUDE THE RECOMMENDED SAFETY PROTECTION MEASURES WITH THE APPROPRIATE LOADING REQUIREMENTS.

THE CONTRACTOR SHALL ENSURE THAT THE PROTECTIVE MEASURES LOCATED ON SITE AND ALL PROCEDURES ON THE PROJECT ARE IN COMPLIANCE WITH ALL ASPECTS OF THE PLAN.

ALL RELATED DOCUMENTATION WILL BE MADE AVAILABLE TO THE INSPECTOR ON A DAILY BASIS. THE CONTRACTOR SHALL PROVIDE COPIES OF ALL RELATED DOCUMENTATION TO THE OWNER UPON REQUEST.

CONFINED SPACE PLANS
THE CONTRACTOR SHALL COMPLY WITH ALL APPLICABLE RULES AND REGULATIONS. WHEN REQUIRED BY THE WORK, THE CONTRACTOR SHALL SUBMIT A CONFINED SPACE PLAN FOR REVIEW. THE CONTRACTOR SHALL ENSURE THAT ALL PROCEDURES EMPLOYED ON THE PROJECT ARE IN COMPLIANCE WITH ALL ASPECTS OF THE PLAN.

ALL RELATED DOCUMENTATION WILL BE MADE AVAILABLE TO THE INSPECTOR ON A DAILY BASIS. THE CONTRACTOR SHALL PROVIDE COPIES OF ALL RELATED DOCUMENTATION TO THE OWNER UPON REQUEST.

WATER LINES
SHALL HAVE A MINIMUM COVER OF 3.5 FT. BELOW FINISHED STREET GRADE UNLESS OTHERWISE SPECIFIED. EXISTING FIRE HYDRANTS THAT ARE TO BE REMOVED SHALL REMAIN THE PROPERTY OF THE CITY OF WACO, AND SHALL BE DELIVERED IN WHOLE TO THE CITY OF WACO STORAGE YARD AT 4TH AND COLCORD.

WASTEWATER
IT SHALL BE THE RESPONSIBILITY OF THE CONTRACTOR TO LOCATE EACH SANITARY SEWER SERVICE AFFECTED BY THE PROJECT AND REPLACE EACH WITH AN EQUAL SIZE NEW SERVICE (4 IN. MIN.), COMPLETE WITH 2-WAY CLEANOUT UNLESS OTHERWISE SPECIFIED.

ALL SANITARY SEWER MANHOLES SHOWN TO BE ABANDONED SHALL HAVE THE RING AND COVER REMOVED AND DELIVERED TO THE CITY OF WACO STORAGE YARD AT 4TH AND COLCORD. ALL PIPES INSIDE THE MANHOLE SHALL BE PLUGGED WITH CONCRETE, THE MANHOLE BACKFILLED WITH FLOWABLE FILL, FOLLOWED BY THE APPROPRIATE SURFACE REPLACEMENT. THE TOP OF THE MANHOLE SHALL BE BROKEN DOWN TO A POINT AT LEAST 12 IN. BELOW NATURAL GROUND OR FINISHED PAVEMENT GRADE, OR 12 IN. BELOW LIMITS OF CONSTRUCTION.

UTILITIES
EXISTING UTILITIES HAVE BEEN SHOWN AS BEST AS CAN BE DETERMINED FROM UTILITY COMPANY RECORDS AND INVESTIGATION. THE UTILITY LINE LOCATIONS SHOWN ON THE PLANS ARE APPROXIMATE ONLY AND ARE FURNISHED AS A GUIDE FOR THE CONTRACTOR. THE CONTRACTOR WILL VERIFY THE LOCATION AND ELEVATION OF ALL UTILITIES BEFORE BEGINNING EXCAVATION.

GAS LINES TO BE RELOCATED OR ADJUSTED BY OTHERS. TELEPHONE LINES TO BE RELOCATED OR ADJUSTED BY OTHERS. UTILITY POLES TO BE RELOCATED BY OTHERS.

THE CONTRACTOR SHALL NOTIFY, (SEE LIST THIS SHEET), PRIOR TO STARTING CONSTRUCTION ON ANY STREET IN THE VICINITY OF ANY EXISTING UTILITIES SO THAT ANY ADJUSTMENTS OF EXISTING UTILITIES THAT HAVE NOT PREVIOUSLY BEEN MADE CAN BE MADE PRIOR TO CONSTRUCTION.

STORM WATER POLLUTION PREVENTION PLAN
THE EROSION CONTROL PLAN PROVIDED IN THE PLAN SET SHALL BE CONSIDERED THE MINIMUM EROSION CONTROL MEASURES FOR THE PROJECT. IT SHALL BE THE CONTRACTOR'S RESPONSIBILITY "TO DEVELOP AND IMPLEMENT A STORM WATER POLLUTION PREVENTION PLAN IN ACCORDANCE WITH TCEQ GENERAL PERMIT TXR150000 PRIOR TO THE BEGINNING OF CONSTRUCTION ACTIVITY", AS DESCRIBED IN SECTION 1.10: STORM WATER POLLUTION PREVENTION IN THE CITY OF WACO'S 2013 STANDARD SPECIFICATIONS FOR CONSTRUCTION AND THE CITY OF WACO CODE OF ORDINANCES, CHAPTER 26 ARTICLE VIII - STORM WATER REGULATIONS SEC. 26-325 THRU SEC. 26-330, IF REQUIRED. THE CONTRACTOR IS RESPONSIBLE FOR MONITORING THE PLAN AS THE WORK PROGRESSES AND SUBMITTING MODIFICATIONS FOR REVIEW AS NEEDED. THE CONTRACTOR IS ALSO RESPONSIBLE FOR ENSURING THE INSPECTOR IS PROVIDED A COPY OF THE APPROVED AND SIGNED PLAN PRIOR TO BEGINNING WORK. THE TABLE BELOW IS FOR INFORMATIONAL PURPOSES ONLY.

ACTION REQUIRED	<1 ACRE	1-5 ACRES	≥ 5 ACRES
IMPLEMENT BMPs AS SHOWN IN PLAN SET*	√	√	√
PREPARE & IMPLEMENT SWP3	—	√	√
POST SITE NOTICE	—	√	√
SUBMIT COPY OF SITE NOTICE TO MS4 OPERATOR	—	√	√
SUBMIT NOI TO TCEQ & MS4 OPERATOR	—	—	√
SUBMIT NOT TO TCEQ & MS4 OPERATOR	—	—	√

*AN EROSION CONTROL PLAN IS REQUIRED, IF NOT INCLUDED IN PLAN SET

STREET CONSTRUCTION
WHERE NEW CURB AND GUTTER IS PLACED NEXT TO EXISTING CURB AND GUTTER, THE GUTTER GRADES SHALL MATCH, AND A 1/2 IN. EXPANSION JOINT SHALL BE ADDED BETWEEN THE OLD AND NEW CURB AND GUTTER, WITH 5/8 IN. x 24 IN. SMOOTH DOWELS, ONE SIDE WRAPPED, PLACED SIMILARLY TO LONGITUDINAL REINFORCING STEEL.

EXISTING PAVEMENT SHALL BE SAWED TO A SMOOTH STRAIGHT LINE AT THE BEGINNING AND END OF STREET CONSTRUCTION WHERE SHOWN AND AT ALL CONSTRUCTION LIMITS WHERE SHOWN.

IN THE CASE OF A STREET BEING LIME STABILIZED AND CURB & GUTTER BEING REPLACED, OR NEW CURB & GUTTER BEING CONSTRUCTED, EACH EXISTING WATER METER THAT IS NOT AT LEAST 2 FT. BEHIND THE PROPOSED BACK OF CURB SHALL BE RELOCATED TO AT LEAST 2 FT. BEHIND THE PROPOSED BACK OF CURB. EACH NEW WATER SERVICE IN THIS CASE SHALL BE CONSTRUCTED SUCH THAT THE METER IS AT LEAST 2 FT. BEHIND THE PROPOSED BACK OF CURB.

INSTALLATION OF ANY PIPE WITHIN THE RIGHT-OF-WAY PROPOSED OR EXISTING STREET SHALL REQUIRE THE SAME EMBEDMENT AS FOR INSTALLATION IN STREETS.

STORM SEWER
MEASURE FOR PAYMENT FOR REINFORCED CONCRETE PIPE SHALL EXTEND ONLY TO THE INSIDE FACE OF MANHOLE WALLS AND SHALL EXCLUDE THE INSIDE MANHOLE DIMENSION.

EXISTING R.C.P. SHALL BECOME THE PROPERTY OF THE CONTRACTOR UPON REMOVAL FROM THE PROJECT.

SIDEWALKS
WHEN OPERATIONS REQUIRE A SIDEWALK CLOSURE, THE CONTRACTOR SHALL USE "SIDEWALK CLOSED" SIGNS AND TRAFFIC CONTROL DEVICES CONTROLLING PEDESTRIAN FLOWS AS NECESSARY TO ROUTE PEDESTRIANS SAFELY AROUND THE CLOSED SIDEWALK.

IF A SIDEWALK IS TO BE CONSTRUCTED NEAR A BUILDING OR STRUCTURE, THE CONTRACTOR SHALL REFER TO THE TXDOT DETAIL: BUILDINGS AND STRUCTURES PROTECTION PLAN. THIS DETAIL INCLUDES NOTES REGARDING PROTECTION OF BUILDINGS AND STRUCTURES DURING THE ENTIRE CONSTRUCTION PROJECT (INCLUDING HISTORICAL BUILDINGS).

UTILITY CONTACTS

AT&T
CALVIN PEWITT
(254) 757-7810 (O)
(254) 715-7869 (M)

ATMOS ENERGY
BURTON JONES
(254) 242-8618
MANUEL CAZARES
(254) 493-0013

GRANDE COMMUNICATIONS
JOHNNY HUTYRA
(254) 235-2072

CENTURYLINK NATIONAL
HUGH NIELSEN
(512) 656-4763

WINDSREAM KDLTX
JOSH MORSE
JOSH.MORSE@WINDSTREAM.COM

SPECTRUM/CHARTER (TWC)
SHAUN WHITEHEAD
SHAUN.WHITEHEAD@CHARTER.COM
(254) 644-7608 (C)
(254) 770-5215 (F)

CCI
BRIAN STORY
(254) 232-7119

MCI
ED HILL
(972) 560-1599
(469) 992-3813

CITY OF WACO WATERSHED PROTECTION MS4 COMPLIANCE
MARK KEELEY
(254) 750-5440
stormwater@wacotx.gov

CITY OF WACO WATER DISTRIBUTION AND SANITARY SEWER
DANA JOHNSTON
(254) 749-7835
AFTER HOURS/EMERGENCY:
(254) 299-2489

CITY OF WACO OPERATIONS DIVISION
FRANK BUTLER (STREETS AND DRAINAGE)
(254) 749-8481

CITY OF WACO TRAFFIC MANAGER
JAMES BAILEY
(254) 750-6639

***CITY OF WACO TRAFFIC SECTION:**
ELECTRICAL CONDUIT & TRAFFIC SIGNALS
CONTACT 24 HOURS IN ADVANCE IF WORKING NEAR SIGNALIZED INTERSECTIONS.
BILLY DEHART
(254) 749-4087

CITY OF WACO TRANSIT
JOSEPH DVORSKY
(254) 750-1744

CITY OF WACO SOLID WASTE
JOHN SETTLEMYER
(OPERATIONS MANAGER)
(254) 379-1790

CITY OF WACO SOLID WASTE
KODY PETILLO
(ASSISTANT DIRECTOR)
(254) 750-6627 (O)
(254) 405-4343 (M)

ONCOR ELECTRIC
FOR DAMAGE TO LINES, CALL ONCOR SERVICE REQUEST (888) 313-6862
TO REPORT A POWER OUTAGE, CALL (888) 313-4747
FOR UTILITY COORDINATION, CALL MICHAEL BALDWIN (254) 750-5202

***NOTE:**
CONTACT BILLY DEHART 24 HOURS IN ADVANCE IF WORKING NEAR SIGNALIZED INTERSECTIONS.

ONE CALL NOTIFICATION CENTERS

LONESTAR NOTIFICATION CENTER
WEBSITE: HTTP://WWW.OCCINC.COM/LOCATIONS/LONE_STAR.ASP
(800) 669-8344

TEXAS EXCAVATION SAFETY SYSTEM
WEBSITE: HTTP://WWW.DIGTESS.ORG
(800) DIG-TESS OR (800) 344-8377

TEXAS ONE CALL SYSTEM
WEBSITE: HTTP://WWW.TEXASONECALL.COM
(800) 245-4545

UNDERGROUND PIPELINE (GAS) DAMAGE REPORTING

WEBSITE: HTTP://WWW.RRC.STATE.TX.US/PROGRAMS/DAMAGEPREVENTION/INDEX.PHP
OPERATIONS CENTER: (800) 460-3030 OR (800) 545-6005

CP&Y, INC.
TEXAS REGISTERED ENGINEERING FIRM
TBPE F-1741

STATE OF TEXAS
DAVID L. MAREK
#83327
REGISTERED
PROFESSIONAL ENGINEER
4-14-2023

NO.	REVISION	BY	DATE

VERIFY SCALE 0 1"
BAR LENGTH EQUALS ONE INCH ON ORIGINAL DRAWING. VERIFY LENGTH ON THIS SHEET AND ADJUST SCALE ACCORDINGLY.

CITY OF WACO
SOUTH 11TH STREET IMPROVEMENTS

CITY OF WACO
GENERAL NOTES

DESIGN: DLM
DRAWN: CDG
REVIEW: DLM
CP&Y: CWAC2200923
CLIENT:

SHEET
C101

ABBREVIATIONS

BM	BENCHMARK
B.O.C.	BACK OF CURB
B.L.	BUILDING LINE
BL	BASELINE
BRG.	BEARING
B.V.	BUTTERFLY VALVE
C-C	CENTER TO CENTER
CFS	CUBIC FEET PER SECOND
C.I.	CAST IRON
C.J.	CONTROL JOINT
℄	CENTERLINE
CMP	CORRUGATED METAL PIPE
C/O	CLEAN OUT
CY	CUBIC YARD
C&G	CONCRETE CURB & GUTTER
CONC.	CONCRETE
CTR.	CENTER
DBL.	DOUBLE
DA	DRAINAGE AREA
D.E.	DRAINAGE EASEMENT
DET.	DETAIL
DIA.	DIAMETER
DIP	DUCTILE IRON PIPE
DN.	DOWN
E.	EAST
E.J.	EXPANSION JOINT
EA.	EACH
ELEV.	ELEVATION
E.O.P.	EDGE OF PAVEMENT
EQ.	EQUAL
ER	END RETURN
E.W.	EACH WAY
EXP.	EXPANSION
EX.	EXISTING
F.H.	FIRE HYDRANT
FL	FLOW LINE
F.O.C.	FACE OF CURB
FDN.	FOUNDATION
FG	FINISHED GROUND
FT.	FOOT (FEET)
GALV.	GALVANIZED
G.V.	GATE VALVE
GRND.	GROUND
H.P.	HORSE POWER
H.P.	HIGH POINT
HW	HEAD WATER
HWL	HIGH WATER LEVEL
HGT.	HEIGHT
HGL	HYDRAULIC GRADE LINE
HMAC	HOT-MIXED ASPHALTIC CONCRETE
HNDRL.	HANDRAIL
HZ.	HORIZONTAL
I.D.	INSIDE DIAMETER
IN.	INCH
INCL.	INCLUDE(D) (ING)
INV.	INVERT
JT.	JOINT
L.	LENGTH
L.F.	LINEAR FOOT
L.O.G.	LIP OF GUTTER
L.P.	LOW POINT
LT.	LEFT
LWL	LOW WATER LEVEL
MTL.	MATERIAL
MAX.	MAXIMUM
MED.	MEDIUM
MBGF	METAL BEAM GUARD FENCE
M.H.	MANHOLE
MIN.	MINIMUM
MISC.	MISCELLANEOUS
M.P.	MID POINT
N.	NORTH
NG	NATURAL GROUND
N.T.S.	NOT TO SCALE
N.I.C.	NOT IN CONTRACT
NO.	NUMBER
OC	ON CENTER
OCEW	ON CENTER EACH WAY
O.D.	OUTSIDE DIAMETER
PC	POINT OF CURVATURE
P.G.L.	PROPOSED GRADE LINE
POB	POINT OF BEGINNING
PRC	POINT OF REVERSE CURVATURE
PSI	POUNDS PER SQUARE INCH
PT	POINT OF TANGENCY
P.U.E.	PUBLIC UTILITY EASEMENT
PVC	POINT OF VERTICAL CURVATURE
PVI	POINT OF VERTICAL INFLECTION
PVT	POINT OF VERTICAL TANGENCY
PVC	POLYVINYL CHLORIDE
R	RADIUS
RE	REFERENCE
REINF.	REINFORCE(D)
REQ'D	REQUIRED
REV.	REVISION
R.O.W.	RIGHT OF WAY
RP	RADIUS POINT
RT.	RIGHT
S.	SOUTH
SAN. SWR.	SANITARY SEWER
S.D.	STORM DRAIN
SF	SQUARE FOOT
SY	SQUARE YARD
SHT.	SHEET
SIM.	SIMILAR
SPEC.	SPECIFICATION
SQ.	SQUARE
STA.	STATION
STD.	STANDARD
STR.	STRUCTURE
SYM.	SYMMETRICAL
SYS.	SYSTEM
TAS	TERMINAL ANCHOR SECTION
TBM	TEMPORARY BENCHMARK
T/C	TOP OF CURB
T.O.B.	TOP OF BANK (BERM)
T.O.G.	TOP OF GRATE
T.O.S.	TOE OF SLOPE
TEL.	TELEPHONE
THK.	THICK
TYP.	TYPICAL
U.O.N.	UNLESS OTHERWISE NOTED
V.	VELOCITY
VERT.	VERTICAL
W	WEST
W/	WITH
W/O	WITHOUT
W.S.EL.	WATER SURFACE ELEVATION
WT.	WEIGHT
WWF	WELDED WIRE FABRIC

TOPOGRAPHIC SURVEY LEGEND

- ● = 1/2" DIAMETER REBAR FOUND, UNLESS OTHERWISE NOTED
- ○ = 1/2" DIAMETER REBAR WITH CAP PLACED, UNLESS OTHERWISE NOTED
- ■ = 1/2" DIAMETER REBAR FOUND IN CONCRETE, UNLESS OTHERWISE NOTED
- ◘ = 1/2" DIAMETER REBAR PLACED IN CONCRETE, UNLESS OTHERWISE NOTED
- M.C.D.R. = McLENNAN COUNTY DEED RECORDS
- M.C.O.P.R. = McLENNAN COUNTY OFFICIAL PUBLIC RECORDS
- ( ) = DEED CALL/PLATTED CALL
- [ ] = ADJOINER CALL
- —WW— = WASTE WATER LINE
- WW = WASTE WATER MANHOLE
- = WASTE WATER CLEANOUT
- —E— = OVERHEAD ELECTRIC LINE
- —U/E— = UNDERGROUND ELECTRIC LINE
- = POWER POLE
- = LIGHT POLE
- = GUY WIRE
- TV = TELEVISION RISER
- —T— = OVERHEAD TELEPHONE LINE
- —U/T— = UNDERGROUND TELEPHONE LINE
- T = TELEPHONE RISER
- = TELEPHONE MANHOLE
- —SD— = STORM SEWER LINE
- D = STORM DRAIN MANHOLE
- —G— = GAS LINE
- G = GAS METER
- —W— = WATER LINE
- M = WATER METER
- = WATER VALVE
- = FIRE HYDRANT
- = WATER SPRINKLER
- = WATER SPRINKLER CONTROL VALVE
- = TEMPORARY BENCHMARK
- = SIGN
- = MAILBOX
- = SOIL BORING
- = TREE
- = SHRUB
- —X— = FENCE
- = ASPHALT
- = CONCRETE
- = COVERED AREA

MATERIALS LEGEND

- GRAVEL
- ROCK RIPRAP, GABIONS
- PAVEMENT
- CONCRETE
- CRUSH LIMESTONE
- SAND
- FILL, HORIZONTAL
- NATURAL GROUND
- COMPACTED FILL (SUBGRADE)

DESIGN LEGEND

WATER PLAN

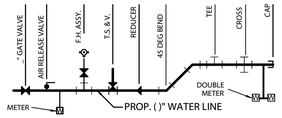

WATER PROFILE

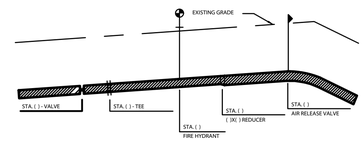

WASTE WATER PLAN

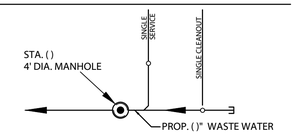

EXISTING CONTOURS — 000

PROPOSED CONTOURS — 000

DRAINAGEWAY

DRAINAGE AREAS

MATCH LINE — MATCHLINE STA. 0+00

PLAN INFORMATION LEGEND

- 1/10 — SECTION NO. / SHEET NO.
- 1/10 — DETAIL NO. / SHEET NO.
- 10 — DRAINAGE JUNCTION NO.
- 10 — INLET NUMBER
- 1 — REVISION NO.

BENCH MARK LIST

CP/TBM No. — DESCRIPTION

SOUTH 11TH ST IMPROVEMENTS

THE BEARINGS SHOWN HEREON ARE GRID BEARINGS AND ARE BASED ON GPS OBSERVATIONS, AND THE TEXAS STATE PLANE COORDINATE SYSTEM, CENTRAL ZONE (4203), NORTH AMERICAN DATUM OF 1983. THE COORDINATES AND DISTANCES ARE IN SURFACE TO CONVERT TO GRID APPLY THE PROJECT SCALE FACTOR OF 1.00012

TBM-1 — Cut boxed ``x" set in concrete at the northwest corner of the 11th Street and Mary Avenue intersection. 5 feet from the building corner of 225 11th Street. Elevation: 425.35'
Northing: 10543205.17
Easting: 3292972.48

TBM-3 — Cut boxed ``x" set in concrete on the west side of 11th Street and ± 230 feet north of the 11th Street and Mary Avenue intersection. Elevation: 428.30'
Northing: 10543345.18
Easting: 3292825.07

WEBSTER AVE EAST CURBLINE IMPROVEMENTS

CP-6 — BOX CUT WITH "X" ELEVATION = 412.51
NORTHING: 10542365.5780
EASTING: 3294225.2590

TBM-7 — BOX CUT WITH "X" (+/-) 370 FEET NORTHEAST OF THE INTERSECTION OF WEBSTER AVE. AND S.8TH ST., (+/-) 30 FEET EAST OF A SANITARY SEWER MANHOLE, (+/-) 1 FOOT EAST OF A WATER VAULT, ALSO BEING THE EAST SIDE OF SIDEWALK ON THE EAST SIDE OF WEBSTER AVE.
ELEVATION = 411.08
NORTHING: 10542536.1100
EASTING: 3294380.2850

TBM-8 — BOX CUT WITH "X" (+/-) SOUTHEAST OF WEBSTER AVE. AND S. 6TH ST., (+/-) 25 FEET NORTH OF AN ENTRY KEYPAD AT THE ENTRANCE TO THE "VETERAN'S BUILDING" PARKING LOT, IN THE TOP OF CURB AT A HANDICAP RAMP ON THE EAST SIDE OF THE SIDEWALK ALSO BEING ON THE EAST SIDE OF WEBSTER AVE. ELEVATION= 410.15
NORTHING: 10542725.3660
EASTING: 294552.7660

CP-10 — BOX CUT WITH "X" (+/-) 70 FEET EAST OF INTERSECTION FO JACKSON AVE. AN DS. 6TH ST. (+/-) 5 FEET NORTHEAST OF A STORM MANHOLE, ON THE NORTH SIDE OF A CONCRETE SIDEWALK. ALSO BEING NORTH SIDE OF S. 6TH ST. ELEVATION=410.88
NORTHING: 105431058.2500
EASTING: 3294352.1260

4TH STREET PEDESTRIAN IMPROVEMENTS

TBM-108 — BOX WITH "X" CUT IN TOP OF STORM DRAIN CURB INLET AT THE NORTHEAST CORNER INTERSECTION OF 4TH STREET AND WEBSTER AVENUE ELEVATION= 409.06
NORTHING: 10544695.8080 EASTING: 3295599.6440

TBM-109 — BOX WITH "X" CUT IN CONCRETE SIDEWALK ON THE SOUTH SIDE OF 4TH STREET (+/-) 220 FEET NORTHWEST OF THE INTERSECTION OF 4TH STREET AND WEBSTER ALSO (+/-) FEET SOUTHEAST OF THE INTERSECTION OF 4TH STREET AND JACKSON AVENUE ELEVATION= 409.00
NORTHING: 10544827.5260 EASTING: 3295363.5270

TRAV -110 — MAG NAIL WITH WASHER STAMPED "CP&Y CONTROL" ELEVATION= 409.63
NORTHING: 10544978.5180 EASTING: 3295278.4850

TRAV-111 — MAG NAIL WITH WASHER STAMPED "CP&Y CONTROL" ELEVATION= 410.04
NORTHING: 10545028.3570 EASTING: 3295248.8020

BASIS OF SURVEY

THE BEARINGS SHOWN HEREON ARE GRID BEARINGS AND ARE BASED ON GPS OBSERVATIONS, AND THE TEXAS STATE PLANE COORDINATE SYSTEM, CENTRAL ZONE (4203), NORTH AMERICAN DATUM OF 1983. THE COORDINATES AND DISTANCES ARE IN SURFACE TO CONVERT TO GRID APPLY THE PROJECT SCALE FACTOR OF 1.00012

CP&Y, INC.
TEXAS REGISTERED ENGINEERING FIRM
TBPE F-1741

STATE OF TEXAS — DAVID L. MAREK #83327 — REGISTERED PROFESSIONAL ENGINEER
4-14-2023

NO.	REVISION	BY	DATE

VERIFY SCALE 0 1"
BAR LENGTH EQUALS ONE INCH ON ORIGINAL DRAWING. VERIFY LENGTH ON THIS SHEET AND ADJUST SCALE ACCORDINGLY.

CITY OF WACO
SOUTH 11TH STREET IMPROVEMENTS

LEGEND & ABBREVIATIONS

DESIGN: DLM
DRAWN: CDG
REVIEW: DLM
CP&Y: CWAC2200923
CLIENT:

SHEET
C102

SOUTH 11TH STREET IMPROVEMENTS

BID PROPOSAL
South 11th Street Improvements

Item No.	Description	Estimate Qty	Unit
BASE BID			
GENERAL CONDITIONS			
1	Mobilization, Permits and Project Incidentals (10% Maximum of Total Bid)	1	LS
2	Bonding and Insurance (2.5% Maximum of Total Bid)	1	LS
3	Stormwater Pollution & Prevention Plan	1	LS
4	Stormwater Pollution & Prevention Plan Implementation	1	LS
5	Trench Safety Plan	1	LS
6	Confined Space Plan & Implementation	1	LS
7	Traffic Control Plan	1	LS
8	Traffic Control Plan Implementation	1	LS
DEMOLITION IMPROVEMENTS			
9	Existing HMAC & Base Material (All Depths, All Types) to be sawcut, removed and disposed off site, including necessary excavation and/or placement of select fill to achieve design subgrade, and all material, labor, equipment and incidentals complete and in place	195	SY
10	Provide variable depth HMAC Milling and disposal offsite, including all HMAC sawcutting, sweeping, dust control, installation of temporary traffic striping, hauling and disposal of millings, and all material, labor, equipment and incidentals complete and in place	358	SY
11	Unclassified Gravel Alley (All Depths, All Types) to be removed and disposed off site, including necessary excavation and/or placement of select fill to achieve design subgrade, and all material, labor, equipment and incidentals complete and in place	32	SY
12	Unclassified Material (All Depths, All Types) to be removed and disposed off site, including necessary excavation and/or placement of select fill to achieve design subgrade, and all material, labor, equipment and incidentals complete and in place	15	SY
13	Existing Concrete Curb and Gutter to be removed and disposed offsite, including necessary saw cutting, removal transportation and disposal and all material, labor, equipment and incidentals complete and in place	168	LF
14	Existing Reinforced Concrete Drive Approach to be removed and disposed offsite, including necessary saw cutting, removal transportation and disposal, necessary excavation and/or placement of select fill to achieve design subgrade and all material, labor, equipment and incidentals complete and in place	115	SF
15	Existing Reinforced Concrete Pavement to be removed and disposed offsite, including necessary saw cutting, removal transportation and disposal, necessary excavation and/or placement of select fill to achieve design subgrade and all material, labor, equipment and incidentals complete and in place	60	SF

BID PROPOSAL
South 11th Street Improvements

Item No.	Description	Estimate Qty	Unit
16	Existing Reinforced Concrete Sidewalk to be removed and disposed offsite, including necessary saw cutting, removal transportation and disposal, necessary excavation and/or placement of select fill to achieve design subgrade, temporary access to businesses, and all material, labor, equipment and incidentals complete and in place	1677	SF
17	Removal of Existing Water Meter Box (All Sizes, All Types) and Disposal Offsite, and all material, labor, equipment, and incidentals complete and in place	2	EA
18	Removal of Existing Water Valve Box (All Sizes, All Types) and Disposal Offsite, and all material, labor, equipment, and incidentals complete and in place	2	EA
19	Existing Water Meter Service to be abandoned, including necessary excavation, backfill, removala nd disposal of water meter box, removal of water meter and retainage for reinstalaltion, storage, transporation, and all material, labor, equipment and incidentals complete and in place	1	EA
20	Existing Signage, Pole and Foundation to be removed, including retainage of sign for reinstallation, storage, transportation, disposal fo pole and foundation in offsite location, and palcement of select fill in excavated area, and all material, labor, equipment and incidentals complete and in place	3	EA
STREET IMPROVEMENTS			
21	Reinforced Concrete Sidewalk with variable height curb, including all necessary subgrade preparation, base material, formwork, reinforcement, concrete, finishing, connection to existing concrete sidewalk, and all material, labor, equipment and incidentals complete and in place	1663	SF
22	Reinforced Concrete Curb & Gutter, including all necessary subgrade preparation, portland cement treated base material, formwork, reinforcement, concrete, finishing, connection to existing concrete curb & gutter, and all material, labor, equipment and incidentals complete and in place	159	LF
23	Reinforced Concrete Drive Approach, including all necessary subgrade preparation, base material, formwork, reinforcement, concrete, finishing, and all material, labor, equipment and incidentals complete and in place	140	SF
24	Reinforced Concrete Drive Apron, including all necessary subgrade preparation, base material, formwork, reinforcement, concrete, finishing, and all material, labor, equipment and incidentals complete and in place	73	SF

BID PROPOSAL
South 11th Street Improvements

Item No.	Description	Estimate Qty	Unit
25	Reinforced Concrete Alley, including all necessary subgrade preparation, base material, formwork, reinforcement, concrete, finishing, and all material, labor, equipment and incidentals complete and in place	280	SF
26	Unreinforced Concrete Base, including all necessary subgrade preparation, concrete, and all material, labor, equipment and incidentals complete and in place	950	SF
27	10" Cement Stabilized Pugmill Base including including all surface preparation, installation, and all material, labor, equipment and incidentals complete and in place	157	SY
28	Variable Depth HMAC Type "C" including application of TRAIL, including all surface preparation, installation, necessary temporary traffic striping, and all material, labor, equipment and incidentals complete and in place	341	SY
29	2" HMAC Type "C" including bonding course, installation, necessary temporary traffic striping, and all material, labor, equipment and incidentals complete and in place	189	SY
30	Reconnection of Existing Commercial Service, including new water meter box, installation of retained water meter, connection to existing service, and all material, labor, equipment and incidentals complete and in place	2	EA
31	Installation of Water Valve Box, including all material, labor, equipment and incidentals complete and in place	2	EA
32	Installation of Signage Pole and Foundation, including installation of retained signage, and all material, labor, equipment and incidentals complete and in place	3	EA
33	2" Commercial Water Service, including necessary excavation, embedment, gravel trench backfill, installation of meter box, installation of retained meter and connection to existing service, and all material, labor, equipment and incidentals complete and in place	1	EA
34	2" Irrigation Service, including necessary excavation, embedment, gravel trench backfill, installation of meter box, installation of new irrigation meter and connection to existing service, and all material, labor, equipment and incidentals complete and in place	1	EA
35	Landscaping Improvements, including all necessary conduits, controller, support, controls, electrical connection, wirings, and all material, labor, equipment and incidentals complete and in place	1	LS
36	Tree Well, including all necessary subgrade preparation, root barriers, formwork, reinforcement, concrete, finishing, and all material, labor, equipment and incidentals complete and in place	3	EA
37	Landscaping Improvements, including all necessary trees, tree support, temporary watering, mulching, fertilizer, and all material, labor, equipment and incidentals complete and in place	1	LS

BID PROPOSAL
South 11th Street Improvements

Item No.	Description	Estimate Qty	Unit
38	Reflective Pavement Marking Type 1, Color: White, Width: 4", solid, 100 mil., including all necessary surface preparation, removal of temporary striping, and all material, labor, equipment and incidentals complete and in place	324	LF
39	Reflective Pavement Marking Type 1, Color: White, Width: 4", solid, 100 mil. (PARKING STALL), including all necessary surface preparation, removal of temporary striping, and all material, labor, equipment and incidentals complete and in place	48	LF
40	Reflective Pavement Marking Type 1, Color: White, Width: 4", solid, 100 mil. (NO PARKING AREAS), including all necessary surface preparation, removal of temporary striping, and all material, labor, equipment and incidentals complete and in place	48	LF
41	Reflective Pavement Marking Type 1, Color: Green Thermo Backed, Bike Box (SMALL) with Arrow including all necessary surface preparation, removal of temporary striping, and all material, labor, equipment and incidentals complete and in place	1	EA
ELECTRICAL & LIGHTING IMPROVEMENTS			
42	Electrical & Lighting Improvements, including all wiring, conduits, bores, light poles, reinforced concrete bases, pull boxes, electrical panels, coordination with Oncor, and all material, labor, equipment and incidentals, complete and in place	1	LS

CP&Y, INC.
TEXAS REGISTERED ENGINEERING FIRM
TBPE F-1741

STATE OF TEXAS
DAVID L. MAREK
#83327
REGISTERED
PROFESSIONAL ENGINEER
4-14-2023

NO.	REVISION	BY	DATE

VERIFY SCALE 0 1"
BAR LENGTH EQUALS ONE INCH ON ORIGINAL DRAWING. VERIFY LENGTH ON THIS SHEET AND ADJUST SCALE ACCORDINGLY.

CITY OF WACO
SOUTH 11TH STREET IMPROVEMENTS

SUMMARY OF QUANTITIES

DESIGN: DLM
DRAWN: CDG
REVIEW: DLM
CP&Y: CWAC2200923
CLIENT:

SHEET
C200

PRINTED BY: emcdougald DATE: 4/12/2023
FILE PATH: G:\Projects\CWAC2200923-11th and Mary\08_Plans_Drawings\20_Sheets\2200923-C10-G1001.dwg, C200

G:\Projects\CWAC2200923-11th and Mary\08_Plans_Drawings\20_Sheets\2200923-C10-G1001.dwg, C200, 4/12/2023 3:17:14 PM, 1:1

- Test
- Retested / Accepted
- Deviation

Terracon

7732 Central Park Dr Waco, TX 76712-6535

512-442-1122 terracon.com

11th Street ADA Ramp Improvements

Coring-Thickness

Exhibit

A-1

Report Number:	Service Date:	Employee:	Scale:
HY221034.0026	10/24/2022	Pierson, Jake	Refer to Drawing

CP&Y, INC.
TEXAS REGISTERED ENGINEERING FIRM
TBPE F-1741

STATE OF TEXAS
DAVID L. MAREK
#83327
REGISTERED
PROFESSIONAL ENGINEER
4-14-2023

NO.	REVISION	BY	DATE

VERIFY SCALE 0 1"
BAR LENGTH EQUALS ONE INCH ON ORIGINAL DRAWING. VERIFY LENGTH ON THIS SHEET AND ADJUST SCALE ACCORDINGLY.

CITY OF WACO
SOUTH 11TH STREET IMPROVEMENTS

CORING-THICKNESS MAP

DESIGN: DLM
DRAWN: CDG
REVIEW: DLM
CP&Y: CWAC2200923
CLIENT:

SHEET
C201

PRINTED BY: emcdougald DATE: 4/12/2023
FILE PATH: G:\Projects\CWAC2200923-11th and Mary\08_Plans_Drawings\20_Sheets\2200923-C10-G\001.dwg, C201

G:\Projects\CWAC2200923-11th and Mary\08_Plans_Drawings\20_Sheets\2200923-C10-G\001.dwg, C201, 4/12/2023 3:17:15 PM, 1:1

CORING-THICKNESS REPORT

Report Number: HY221034.0026
Service Date: 10/24/22
Report Date: 10/31/22

Terracon
7732 Central Park Dr
Waco, TX 76712-6535
512-442-1122 Reg No: TX-F3272

Client
City of Waco TX
Attn: Tracey Graham
PO BOX 2570
Waco, TX 76702-2570

Project
11th Street ADA Ramp Improvements
11th Avenue from Columbus to Ross
Waco, TX 76706

Project Number: HY221034

Core #1: 6-7" of asphalt followed by 10" of sand with gravel, hit a black clay at ~16"

Core #2: 6-7" of asphalt, at about 3-4" it was starting to be heavily deteriorated, (pictured) followed by a cement treated base below. Could not verify the CTB due to extreme hardness. (Drill would not advance, hand auger, or metal pry bar.)


Core #1 (HMA)


Core #1 (Total Depth)


Core #2 (Deteriorated)


Core #2 (Total Depth)

Services: Asphalt Coring for Measurement of Thickness & Density

Terracon Rep.: Jake Pierson
Reported To: Tracey Graham with City of Waco
Contractor: City of Waco
Report Distribution:
(1) City of Waco TX, Tracey Graham (1) BGE, Inc., Matthew Skopik

Reviewed By:
Scott M. Gruenberger
Group Manager

The tests were performed in general accordance with applicable ASTM, AASHTO, or DOT test methods. This report is exclusively for the use of the client indicated above and shall not be reproduced except in full without the written consent of our company. Test results transmitted herein are only applicable to the actual samples tested at the location(s) referenced and are not necessarily indicative of the properties of other apparently similar or identical materials.

CP&Y, INC.
TEXAS REGISTERED ENGINEERING FIRM
TBPE F-1741

STATE OF TEXAS
DAVID L. MAREK
#83327
REGISTERED
PROFESSIONAL ENGINEER
4-14-2023

NO.	REVISION	BY	DATE

VERIFY SCALE 0 1"
BAR LENGTH EQUALS ONE INCH ON ORIGINAL DRAWING. VERIFY LENGTH ON THIS SHEET AND ADJUST SCALE ACCORDINGLY.

CITY OF WACO
SOUTH 11TH STREET IMPROVEMENTS

CORING-THICKNESS REPORT

DESIGN: DLM
DRAWN: CDG
REVIEW: DLM
CP&Y: CWAC2200923
CLIENT:

SHEET
C202

PRINTED BY: emcdougald DATE: 4/12/2023
FILE PATH: G:\Projects\CWAC2200923-11th and Mary\08_Plans_Drawings\20_Sheets\2200923-C10-G1001.dwg, C202
G:\Projects\CWAC2200923-11th and Mary\08_Plans_Drawings\20_Sheets\2200923-C10-G1001.dwg, C202, 4/12/2023 3:17:18 PM, 1:1

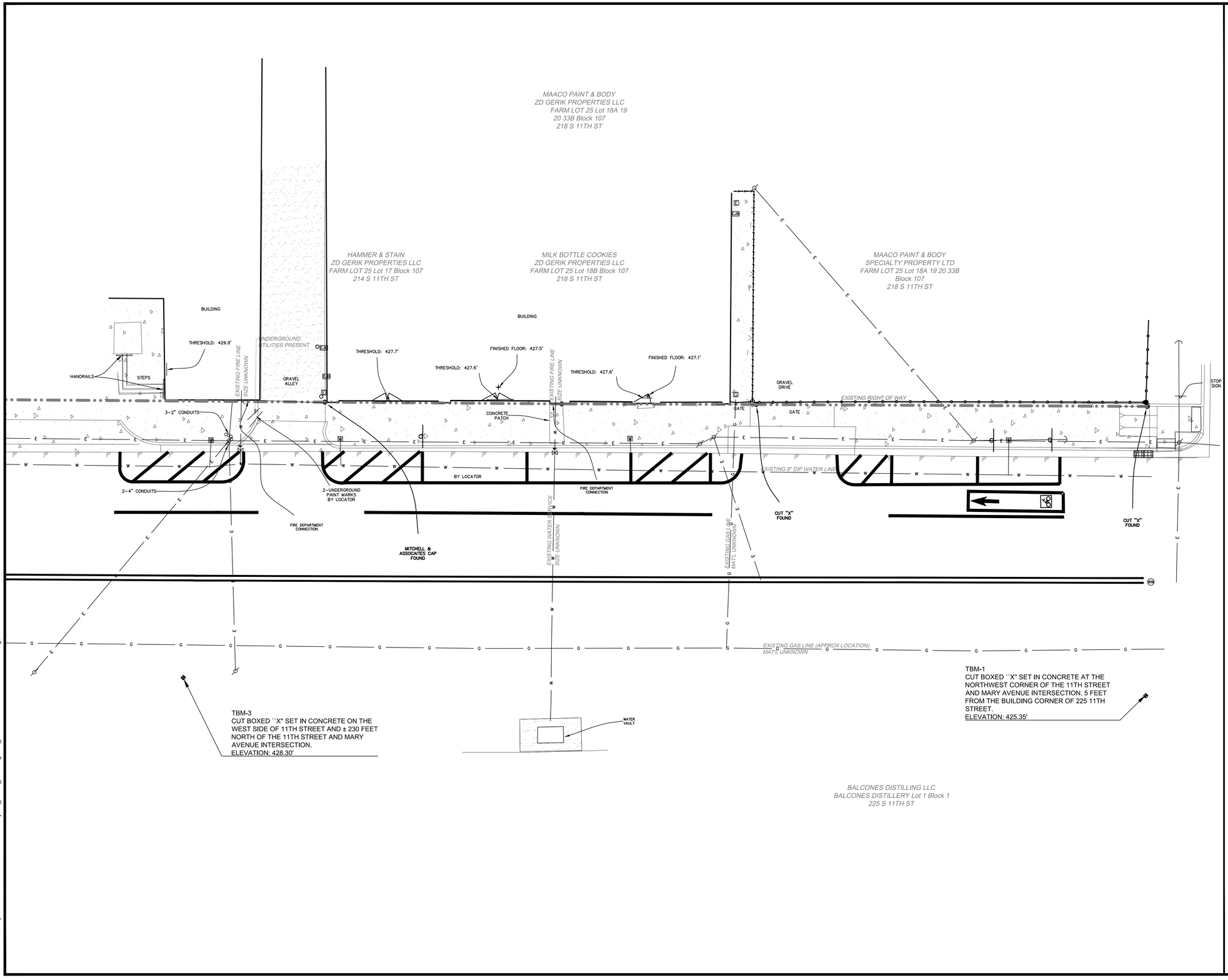

CP&Y, INC.
TEXAS REGISTERED ENGINEERING FIRM
TBPE F-1741

STATE OF TEXAS
DAVID L. MAREK
#83327
REGISTERED
PROFESSIONAL ENGINEER
4-14-2023

NO.	REVISION	BY	DATE

VERIFY SCALE BAR LENGTH EQUALS ONE INCH ON ORIGINAL DRAWING. VERIFY LENGTH ON THIS SHEET AND ADJUST SCALE ACCORDINGLY.
1"
0

CITY OF WACO
SOUTH 11TH STREET IMPROVEMENTS

EXISTING SURVEY

DESIGN: DLM
DRAWN: CDG
REVIEW: DLM
CP&Y: CWAC2200996
CLIENT:

SHEET
C203

PRINTED BY: emcdougald DATE: 4/11/2023
FILE PATH: G:\Projects\CWAC2200923-11th and Mary\08_Plans_Drawings\20_Sheets\2200923-C20-CD001.dwg, C203

G:\Projects\CWAC2200923-11th and Mary\08_Plans_Drawings\20_Sheets\2200923-C20-CD001.dwg, C203, 4/12/2023 3:17:31 PM, 1:1

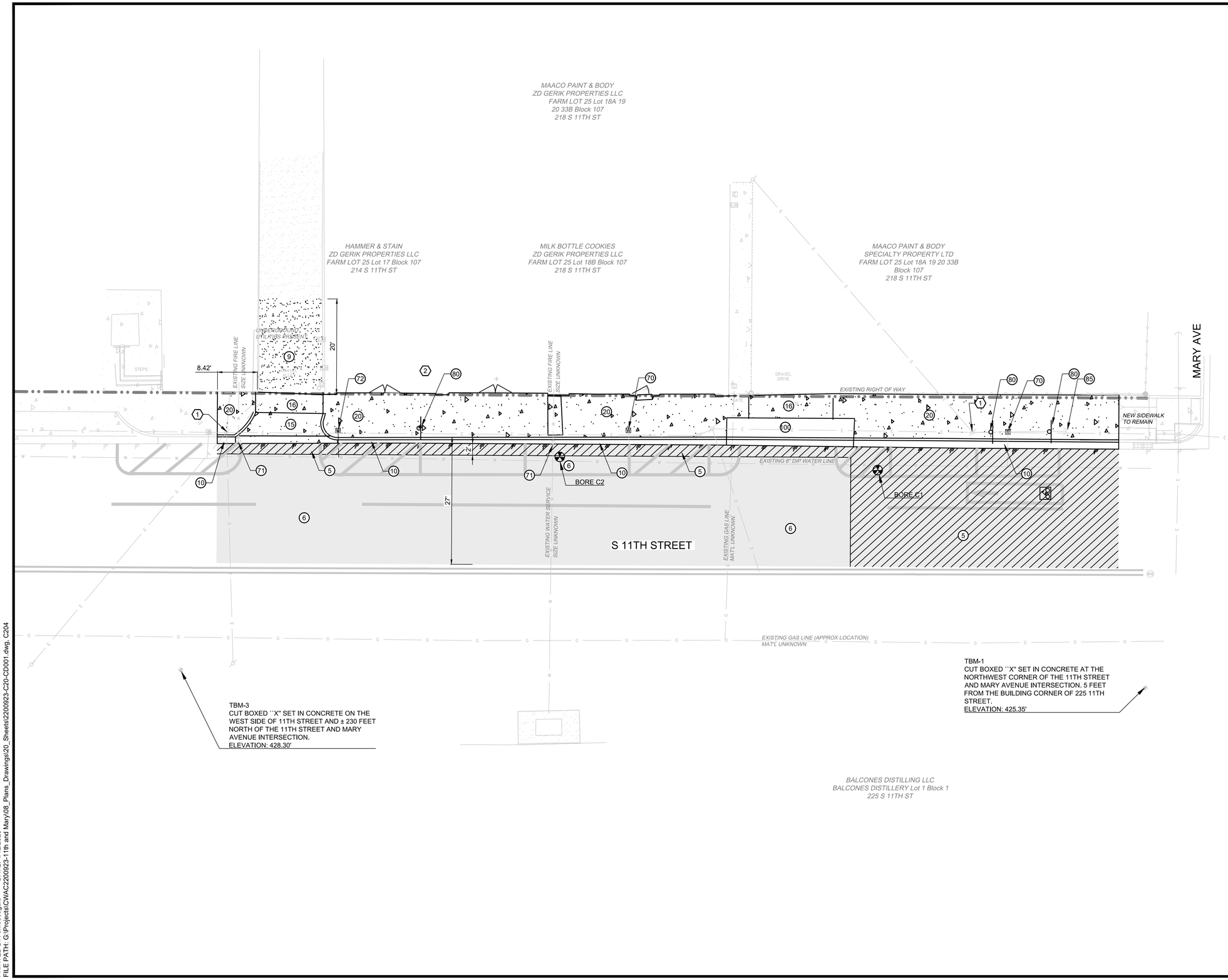

0 10 20
SCALE IN FEET

DEMOLITION CALLOUTS

(5) HMAC & BASE (ALL DEPTHS) TO BE SAWCUT, REMOVED, & DISPOSED OFFSITE. CONTRACTOR TO PROVIDE NECESSARY EXCAVATION AND/OR FILL TO OBTAIN DESIGN SUBGRADE. COST TO BE SUBSIDIARY TO BID ITEM

(6) HMAC TO BE MILLED (VARIABLE DEPTH)(SEE CROSS ECTIONS). CONTRACTOR TO DISPOSE OF MILLINGS IN OFFSITE LOCATION

(9) UNCLASSIFIED GRAVEL ALLEY (ALL DEPTHS) TO BE REMOVED & DISPOSED OFFSITE. CONTRACTOR TO PROVIDE NECESSARY EXCAVATION AND/OR FILL TO OBTAIN DESIGN SUBGRADE. COST TO BE SUBSIDIARY TO BID ITEM

(10) CONCRETE CURB OR CURB & GUTTER (ALL TYPES) TO BE SAWCUT, REMOVED & DISPOSED OFFSITE. CONTRACTOR TO REMOVE HMAC & BASE NECESSARY FOR CURB & GUTTER CONSTRUCTION.

(15) REINFORCED CONCRETE DRIVE APPROACH TO BE SAWCUT, REMOVED & DISPOSED OFFSITE. CONTRACTOR TO PROVIDE NECESSARY EXCAVATION AND/OR PLACEMENT OF SELECT FILL TO OBTAIN DESIGN SUBGRADE. COST TO BE SUBSIDIARY TO BID ITEM

(16) REINFORCED CONCRETE PAVEMENT (ALL THICKNESSES) TO BE SAWCUT, REMOVED, & DISPOSED OFFSITE. CONTRACTOR TO PROVIDE NECESSARY EXCAVATION AND/OR PLACEMENT OF SELECT FILL TO OBTAIN DESIGN SUBGRADE. COST TO BE SUBSIDIARY TO BID ITEM

(20) REINFORCED CONCRETE SIDEWALK TO BE SAWCUT, REMOVED & DISPOSED OFFSITE. CONTRACTOR TO PROVIDE NECESSARY EXCAVATION AND/OR PLACEMENT OF SELECT FILL TO OBTAIN DESIGN SUBGRADE. COST SHALL BE SUBSIDIARY TO REMOVAL BID ITEM.

(70) EXISTING WATER METER BOX TO BE REMOVED & DISPOSED OFFSITE.

(71) EXISTING WATER VALVE BOX TO BE REMOVED & DISPOSED OFFSITE.

(72) EXISTING WATER SERVICE TO BE ABANDONED TO THE MAIN. RETAIN METER FOR REINSTALLATION. EXISTING WATER METER BOX TO BE REMOVED & DISPOSED OFFSITE.

(80) EXISTING SIGN, POLE & FOUNDATION TO BE REMOVED. RETAIN SIGN FOR REINSTALLATION. POLE & FOUNDATION TO BE DISPOSED OFFSITE IN APPROVED LOCATION. INSTALL SELECT FILL IN EXCAVATED VOID. COST OF FILL INSTALLATION TO BE INCIDENTAL TO ITEM OF WORK

(85) COORDINATE GUY WIRE FOUNDATION WITH REMOVAL OF SIDEWALK WITH UTILITY OWNER

(100) REMOVE EXISTING UNCLASSIFIED MATERIAL & DISPOSE OFFSITE

SPECIAL PROJECT NOTES

(1) EXISTING WOODEN POLE WITH COMMUNICATION DROP. CONTRACTOR TO BE AWARE THAT PRIVATE UTILITIES MAY BE BENEATH SIDEWALK DURING DEMOLITION ACTIVITIES

(2) CONTRACTOR TO MAINTAIN ACCESS TO BUSINESS DURING NORMAL WORKING HOURS. CONTRACTOR TO PROVIDE MINIMUM 72 HOUR NOTICE PRIOR TO DEMOLITION IN TRAVEL AISLE TO ENTRANCE. CONTRACTOR TO PROVIDE TEMPORARY BOARDWALK TO ENTRANCE; COST TO BE SUBSIDIARY TO DEMOLITION BID ITEM.

!!!CAUTION!!!
EXISTING OVERHEAD UTILITIES IN VICINITY. CONTRACTOR SHALL EXERCISE EXTREME CAUTION WHEN WORKING NEAR ELECTRIC FACILITIES.

!!!WARNING!!!
THE ENGINEER ASSUMES NO RESPONSIBILITY FOR THE ACCURACY OF THE LOCATION OF UNDERGROUND UTILITIES. THE CONTRACTOR SHALL BE RESPONSIBLE FOR LOCATION AND AVOIDING ALL EXISTING UTILITIES BY CALLING THE 'ONE CALL' LOCATOR SERVICE AT (800)344-8377 AT LEAST 48 HOURS PRIOR TO CONSTRUCTION.

CP&Y, INC.
TEXAS REGISTERED ENGINEERING FIRM
TBPE F-1741

STATE OF TEXAS
DAVID L. MAREK
#83327
REGISTERED
PROFESSIONAL ENGINEER
4-14-2023

NO.	REVISION	BY	DATE

VERIFY SCALE 0 1"
BAR LENGTH EQUALS ONE INCH ON ORIGINAL DRAWING. VERIFY LENGTH ON THIS SHEET AND ADJUST SCALE ACCORDINGLY

CITY OF WACO
SOUTH 11TH STREET IMPROVEMENTS

DEMOLITION PLAN

DESIGN: DLM
DRAWN: CDG
REVIEW: DLM
CP&Y: CWAC2200996
CLIENT:

SHEET
C204

PRINTED BY: emcdougald DATE: 4/12/2023
FILE PATH: G:\Projects\CWAC2200923-11th and Mary\08_Plans_Drawings\20_Sheets\2200923-C20-CD001.dwg, C204

G:\Projects\CWAC2200923-11th and Mary\08_Plans_Drawings\20_Sheets\2200923-C20-CD001.dwg, C204, 4/14/2023 2:23:32 PM, 1:1

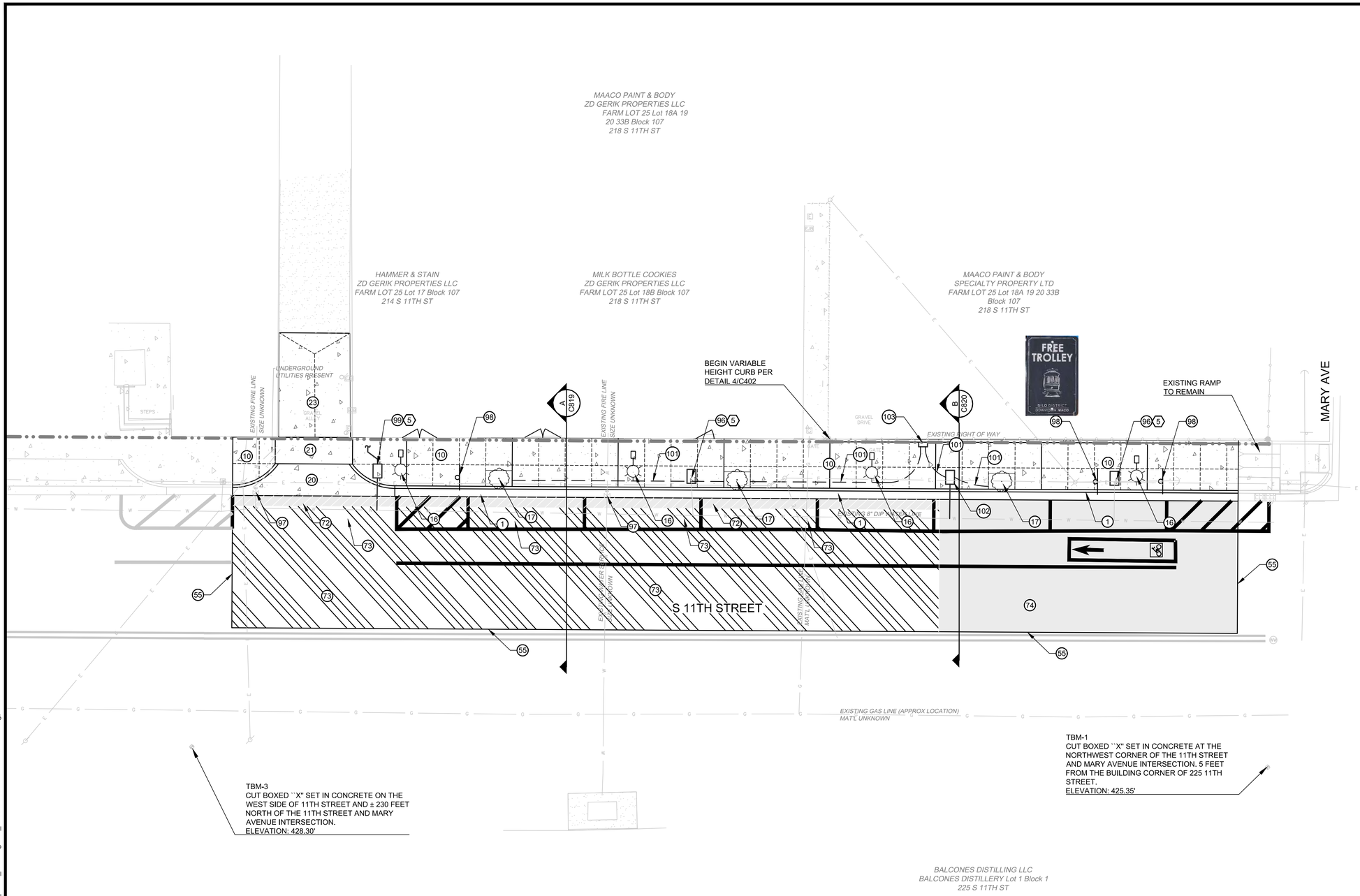

0 10 20
SCALE IN FEET

SITE CALLOUTS

1. REINFORCED CONCRETE STANDARD CURB & GUTTER PER C.O.W. STANDARDS
10. REINFORCED CONCRETE SIDEWALK PER C.O.W. STD DETAILS, INCLUDING VARIABLE HEIGHT CURB
    MIN. CROSS SLOPE: 1%
    MAX CROSS SLOPE: 2%
    VERTICAL DIFFERENCE AT ALL THRESHOLDS TO BE 1/4" MAXIMUM
16. ANTIQUE STREET LIGHT. SEE ELECTRICAL PLANS
17. 5' X 3' TREE WELL W/ ROOT BARRIER PER C.O.W. G-3. INSTALL TREES FROM THE FOLLOWING APPROVED LIST:
    - CHINESE PISTACHE
    - ALLEE ELMS
    - SWEET GUMS
    - CHINKAPIN OAKS

    MIN TRUNK SIZE: 2 2"Ø
    INSTALL TWO OF ONE VARIETY & ONE OF THE REMAINING LIST. CITY OF WACO TO APPROVE SELECTION VARIETY AND QUANTITY. DWARF SPECIES MAY BE UTILIZED
20. REINFORCED CONCRETE DRIVE APPROACH PER C.O.W. DETAIL ST-24A & ST24-B.
21. REINFORCED CONCRETE DRIVE APRON PER C.O.W. DETAIL ST-24A.
23. REINFORCED CONCRETE ALLEY PER C.O.W. DETAIL ST-4.
55. CRACKSEAL NEW ASPHALT EDGES WITH CRAFCO POLYFLEX TYPE 3 OR APPROVED EQUAL
72. 2" HMAC TYPE 'C' & 2000 PSI CONCRETE BASE PER C.O.W. DETAIL ST-20
73. VARIABLE THICKNESS HMAC OVERLAY, TxDOT ITEM 340, TYPE 'C', INCLUDING TRAIL, HOT APPLIED
74. 2" HMAC, TxDOT ITEM 340, TYPE 'C', 10" CEMENT STABILIZED BASE, & SUBGRADE COMPACTED TO 95% OF ASTM D698, INCLUDING ALL NECESSARY EXCAVATION / PLACEMENT OF FILL
96. INSTALL NEW WATER METER BOX, FLUSH WITH FINAL SIDEWALK GRADE & ELEVATION PER CITY OF WACO DETAIL W-17 OR W-18. RELOCATE EXISTING METER & CONNECT TO EXISTING SERVICE
97. INSTALL NEW WATER VALVE BOX, FLUSH WITH FINAL PAVEMENT GRADE & ELEVATION PER CITY OF WACO DETAIL W-7 OR W-8
98. INSTALL NEW POLE & FOUNDATION PER C.O.W. DETAIL T-6. REATTACH RETAINED SIGNAGE. IF DAMAGED, CONTRACTOR TO REPLACE SIGN AT NO ADDITIONAL COST TO OWNER.
99. INSTALL 2" COMMERCIAL SERVICE, INCLUDING REINSTALLATION OF EXISTING METER & CONNECTION TO EXISTING PRIVATE SERVICE
101. 2-2" SCH-40 PVC IRRIGATION SLEEVE
102. 2" IRRIGATION SERVICE WITH 1-1/2" METER
103. IRRIGATION CONTROLLER INSTALLED IN ALL WEATHER ENCLOSURE

SPECIAL PROJECT NOTES

2. CONTRACTOR TO MAINTAIN ACCESS TO BUSINESS DURING NORMAL WORKING HOURS. CONTRACTOR TO PROVIDE MINIMUMM 72 HOUR NOTICE PRIOR TO DEMOLITION IN TRAVEL AISLE TO ENTRANCE. CONTRACTOR TO PROVIDE TEMPORARY BOARDWALK TO ENTRANCE; COST TO BE SUBSIDIARY TO DEMOLITION BID ITEM.
4. CONTRACTOR TO PROVIDE ALL PIPING, WIRING, CONTROLS, ETC. TO PROVIDE IRRIGATION SERVICE TO NEW TREE WELLS. CONTRACTOR TO PROVIDE IRRIGATION PLAN FOR SUBMITTAL TO CITY OF WACO.
5. CONTRACTOR TO NOTIFY PROPERTY OWNERS A MINIMUM OF 72 HOURS PRIOR TO INTERRUPTION OF WATER SERVICE. IF WORK IS TO OCCUR AFTER HOURS OR AT NIGHT, ANY ADDITIONAL COSTS SHALL BE INCIDENTAL TO ITEM OF WORK
6. CONTRACTOR TO ADJUST JUNCTION BOXES, PRIVATE METER BOXES, ETC. TO BE FLUSH WITH FINAL GRADE AT NO COST TO OWNER

LEGEND

- 2" HMAC TYPE 'C', 8" CONCRETE
- VARIABLE THICKNESS HMAC OVERLAY
- 2" HMAC TYPE 'C', 10" CEMENT STABILIZED BASE

JOINT LEGEND

- CONTROL JOINT (EVERY 5')
- EXPANSION JOINT (EVERY 20')

!!!CAUTION!!!
EXISTING OVERHEAD UTILITIES IN VICINITY. CONTRACTOR SHALL EXERCISE EXTREME CAUTION WHEN WORKING NEAR ELECTRIC FACILITIES.

!!!WARNING!!!
THE ENGINEER ASSUMES NO RESPONSIBILITY FOR THE ACCURACY OF THE LOCATION OF UNDERGROUND UTILITIES. THE CONTRACTOR SHALL BE RESPONSIBLE FOR LOCATION AND AVOIDING ALL EXISTING UTILITIES BY CALLING THE 'ONE CALL' LOCATOR SERVICE AT (800)344-8377 AT LEAST 48 HOURS PRIOR TO CONSTRUCTION.

CP&Y, INC.
TEXAS REGISTERED ENGINEERING FIRM
TBPE F-1741

STATE OF TEXAS
DAVID L. MAREK
#83327
REGISTERED
PROFESSIONAL ENGINEER
4-14-2023

NO.	REVISION	BY	DATE

VERIFY SCALE
BAR LENGTH EQUALS ONE INCH ON ORIGINAL DRAWING. VERIFY LENGTH ON THIS SHEET AND ADJUST SCALE ACCORDINGLY
0 1"

CITY OF WACO
SOUTH 11TH STREET IMPROVEMENTS

SITE PLAN

DESIGN: DLM
DRAWN: CDG
REVIEW: DLM
CP&Y: CWAC2200996
CLIENT:

SHEET
C300

PRINTED BY: emcdougald DATE: 4/12/2023
FILE PATH: G:\Projects\CWAC2200923-11th and Mary\08_Plans_Drawings\20_Sheets\2200923-C30-CP001.dwg, C300

G:\Projects\CWAC2200923-11th and Mary\08_Plans_Drawings\20_Sheets\2200923-C30-CP001.dwg, C300, 4/12/2023 3:17:47 PM, 1:1

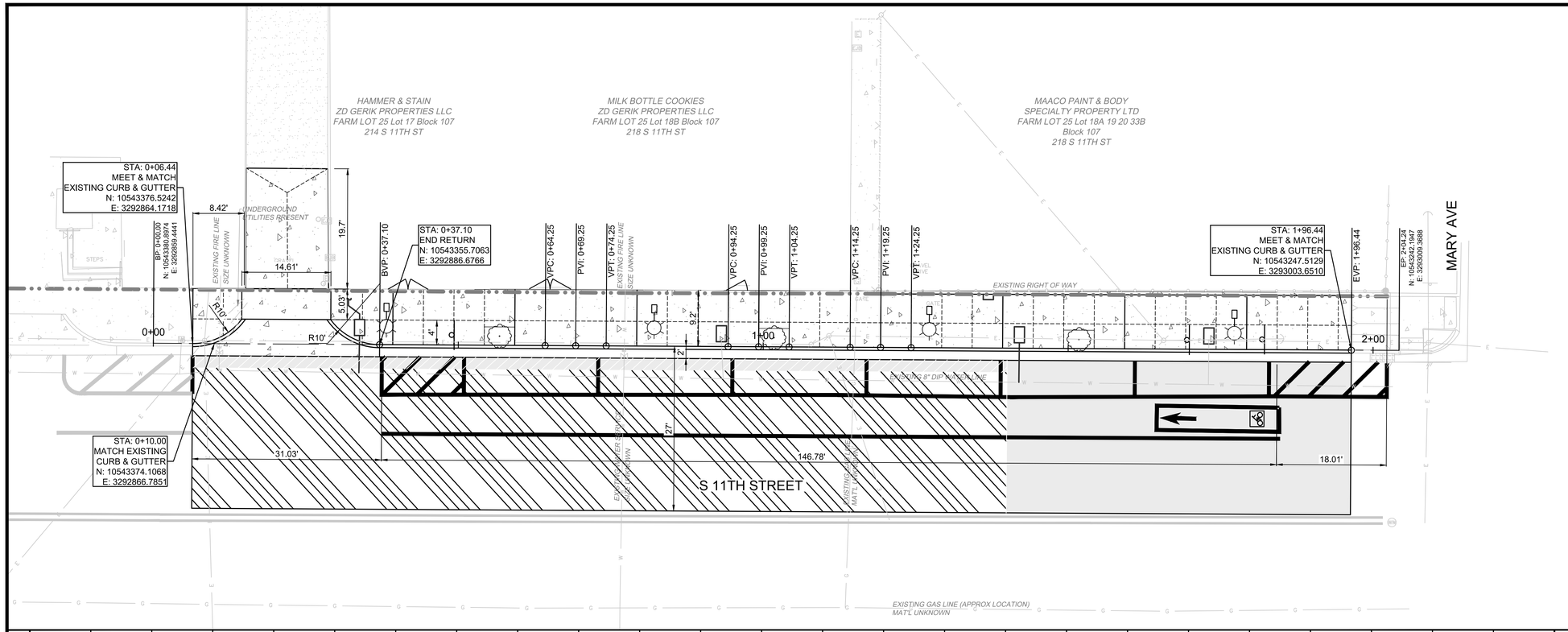

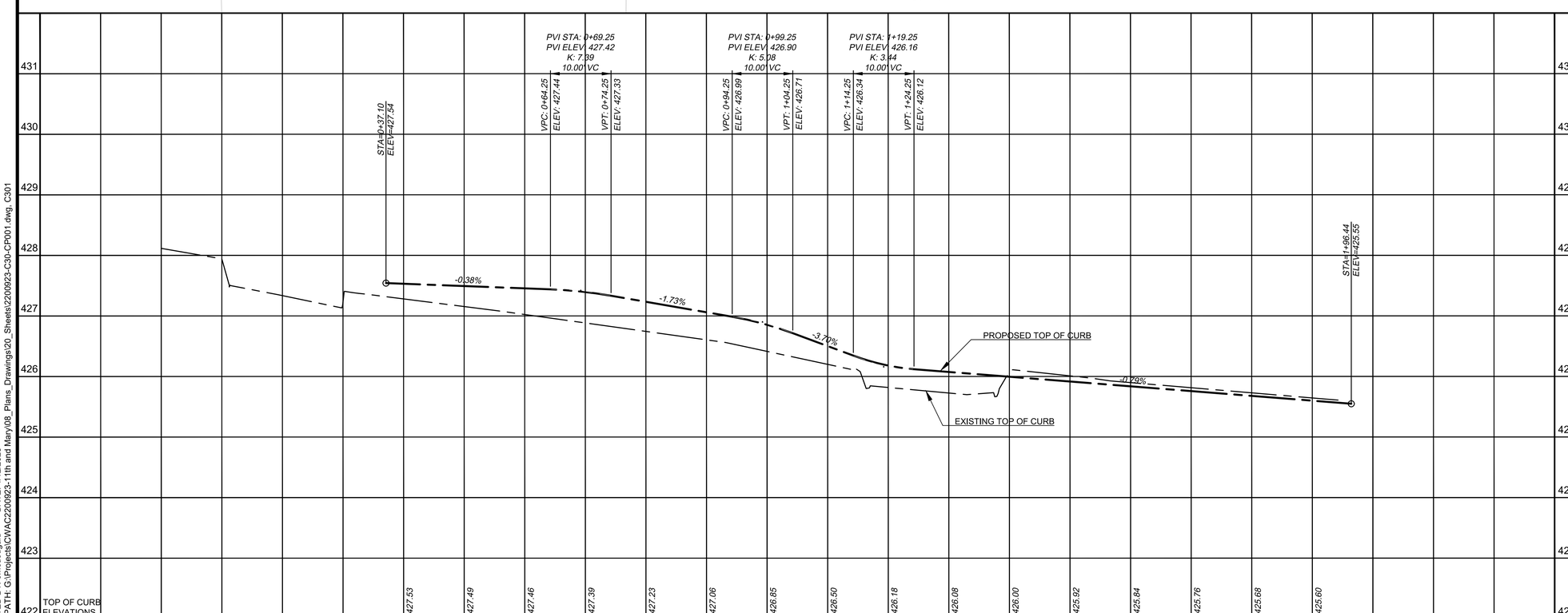

HORZ 0 10 20
VERT 0 1 2
SCALE IN FEET

JOINT LEGEND

- CONTROL JOINT (EVERY 5')
- EXPANSION JOINT (EVERY 20')

!!!CAUTION!!!
EXISTING OVERHEAD UTILITIES IN VICINITY. CONTRACTOR SHALL EXERCISE EXTREME CAUTION WHEN WORKING NEAR ELECTRIC FACILITIES.

!!!WARNING!!!
THE ENGINEER ASSUMES NO RESPONSIBILITY FOR THE ACCURACY OF THE LOCATION OF UNDERGROUND UTILITIES. THE CONTRACTOR SHALL BE RESPONSIBLE FOR LOCATION AND AVOIDING ALL EXISTING UTILITIES BY CALLING THE 'ONE CALL' LOCATOR SERVICE AT (800)344-8377 AT LEAST 48 HOURS PRIOR TO CONSTRUCTION.

CP&Y, INC.
TEXAS REGISTERED ENGINEERING FIRM
TBPE F-1741

STATE OF TEXAS
DAVID L. MAREK
#83327
REGISTERED PROFESSIONAL ENGINEER
4-14-2023

NO.	REVISION	BY	DATE

VERIFY SCALE 0 1"
BAR LENGTH EQUALS ONE INCH ON ORIGINAL DRAWING. VERIFY LENGTH ON THIS SHEET AND ADJUST SCALE ACCORDINGLY.

CITY OF WACO
SOUTH 11TH STREET IMPROVEMENTS

DIMENSION CONTROL PLAN
CURB PLAN & PROFILE

DESIGN: DLM
DRAWN: CDG
REVIEW: DLM
CP&Y: CWAC2200996
CLIENT:

SHEET
C301

PRINTED BY: emcdougald DATE: 4/12/2023
FILE PATH: G:\Projects\CWAC2200923-11th and Mary\08_Plans_Drawings\20_Sheets\2200923-C30-CP001.dwg, C301

G:\Projects\CWAC2200923-11th and Mary\08_Plans_Drawings\20_Sheets\2200923-C30-CP001.dwg, C301, 4/12/2023 3:17:49 PM, 1:1

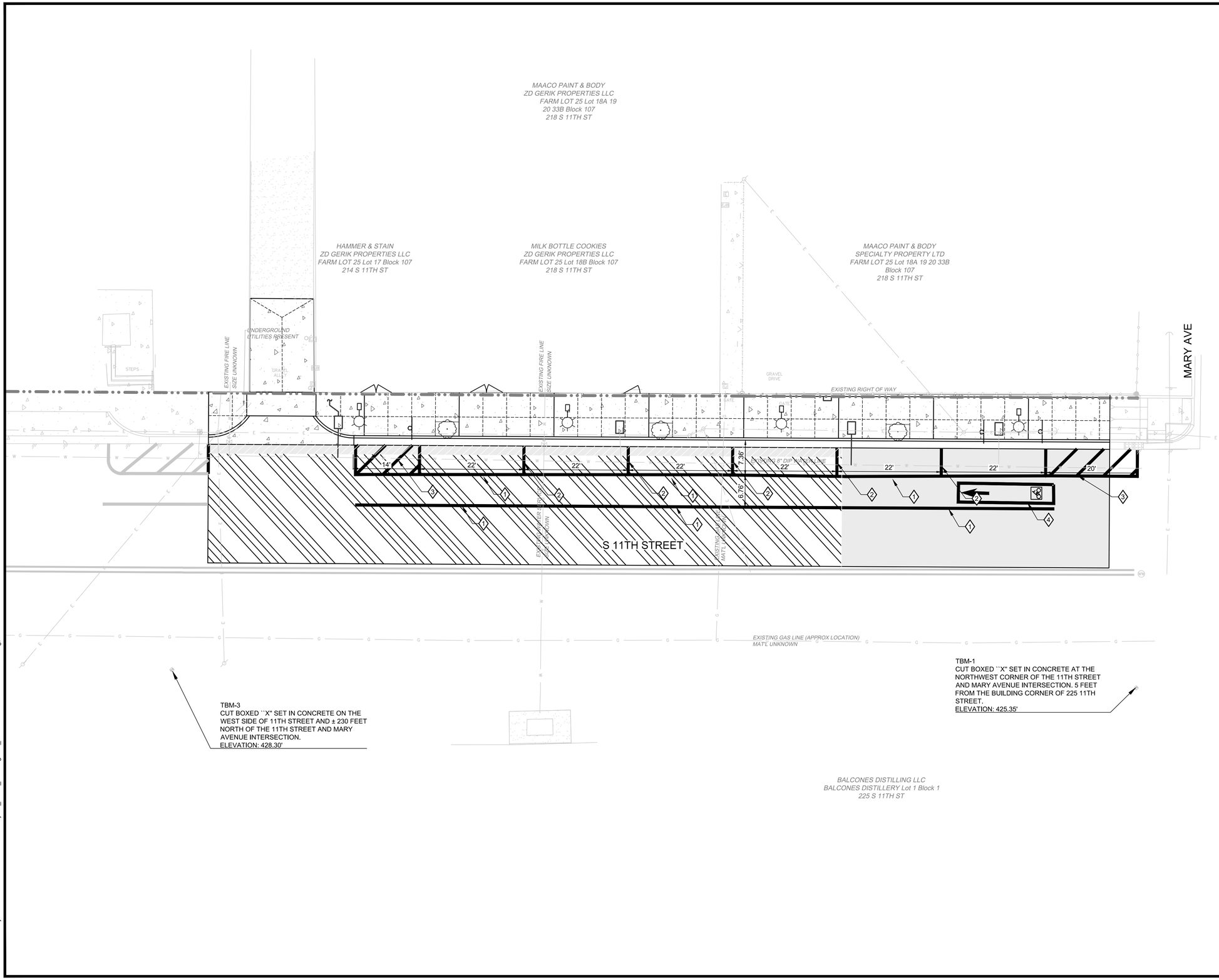

0 10 20
SCALE IN FEET

STRIPING CALLOUTS

1. REFL PAV MRK TY 1 (W) 4" (SLD) (100 MIL)
2. REFL PAV MRK TY 1 (W) 4" (SLD) (100 MIL) (PARKING STALLS)
3. "NO PARKING" REFL PAV MRK TY 1 (W) 4" (SLD) (100 MIL)
4. REFL PAV MRK TY 1 BIKE BOX (SMALL) WITH ARROW AND BIKE SYMBOL, GREEN THERMO BACKED

!!!CAUTION!!!
EXISTING OVERHEAD UTILITIES IN VICINITY. CONTRACTOR SHALL EXERCISE EXTREME CAUTION WHEN WORKING NEAR ELECTRIC FACILITIES.

!!!WARNING!!!
THE ENGINEER ASSUMES NO RESPONSIBILITY FOR THE ACCURACY OF THE LOCATION OF UNDERGROUND UTILITIES. THE CONTRACTOR SHALL BE RESPONSIBLE FOR LOCATION AND AVOIDING ALL EXISTING UTILITIES BY CALLING THE 'ONE CALL' LOCATOR SERVICE AT (800)344-8377 AT LEAST 48 HOURS PRIOR TO CONSTRUCTION.

CP&Y, INC.
TEXAS REGISTERED ENGINEERING FIRM
TBPE F-1741

STATE OF TEXAS
DAVID L. MAREK
#83327
REGISTERED
PROFESSIONAL ENGINEER
4-14-2023

NO.	REVISION	BY	DATE

VERIFY SCALE 0 1"
BAR LENGTH EQUALS ONE INCH ON ORIGINAL DRAWING. VERIFY LENGTH ON THIS SHEET AND ADJUST SCALE ACCORDINGLY.

CITY OF WACO
SOUTH 11TH STREET IMPROVEMENTS

PAVEMENT MARKING PLAN

DESIGN: DLM
DRAWN: CDG
REVIEW: DLM
CP&Y: CWAC2200996
CLIENT:

SHEET
C302

PRINTED BY: emcdougald DATE: 4/12/2023
FILE PATH: G:\Projects\CWAC2200923-11th and Mary\08_Plans_Drawings\20_Sheets\2200923-C30-CP001.dwg, C302

G:\Projects\CWAC2200923-11th and Mary\08_Plans_Drawings\20_Sheets\2200923-C30-CP001.dwg, C302, 4/12/2023 3:17:51 PM, 1:1

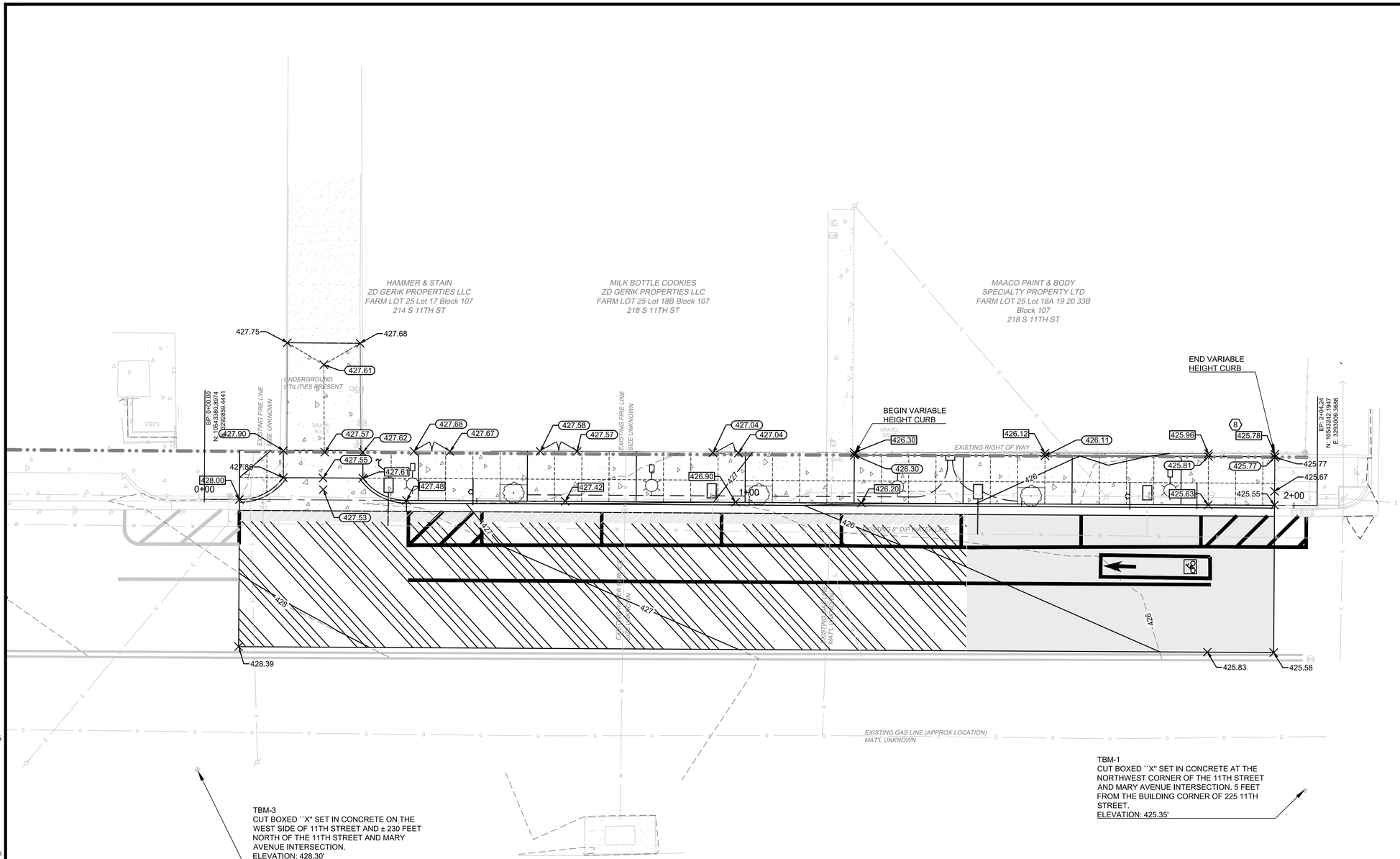

0 10 20
SCALE IN FEET

GRADING CALLOUTS

123.45	SPOT ELEVATION
123.95	TOP OF CURB ELEVATION
123.85	EXISTING ELEVATION

LEGEND

EXISTING CONTOURS

PROPOSED CONTOURS

SPECIAL PROJECT NOTES

(8) CONTRACTOR TO VERIFY ELEVATION OF TOP OF SIDEWALK AT POINT OF CONNECTION PRIOR TO BEGINNING DEMOLITION WORK. NOTIFY ENGINEER IF A DISCREPANCY EXISTS.

!!!CAUTION!!!
EXISTING OVERHEAD UTILITIES IN VICINITY. CONTRACTOR SHALL EXERCISE EXTREME CAUTION WHEN WORKING NEAR ELECTRIC FACILITIES.

!!!WARNING!!!
THE ENGINEER ASSUMES NO RESPONSIBILITY FOR THE ACCURACY OF THE LOCATION OF UNDERGROUND UTILITIES. THE CONTRACTOR SHALL BE RESPONSIBLE FOR LOCATION AND AVOIDING ALL EXISTING UTILITIES BY CALLING THE 'ONE CALL' LOCATOR SERVICE AT (800)344-8377 AT LEAST 48 HOURS PRIOR TO CONSTRUCTION.

CP&Y, INC.
TEXAS REGISTERED ENGINEERING FIRM
TBPE F-1741

STATE OF TEXAS
DAVID L. MAREK
#83327
REGISTERED
PROFESSIONAL ENGINEER
4-14-2023

NO.	REVISION	BY	DATE

VERIFY SCALE 0 1"
BAR LENGTH EQUALS ONE INCH ON ORIGINAL DRAWING. VERIFY LENGTH ON THIS SHEET AND ADJUST SCALE ACCORDINGLY.

CITY OF WACO
SOUTH 11TH STREET IMPROVEMENTS

GRADING PLAN

DESIGN: DLM
DRAWN: CDG
REVIEW: DLM
CP&Y: CWAC2200996
CLIENT:

SHEET
C303

PRINTED BY: emcdougald DATE: 3/24/2023
FILE PATH: G:\Projects\CWAC2200923-11th and Mary\08_Plans_Drawings\20_Sheets\2200923-C31-CG001.dwg, C303

G:\Projects\CWAC2200923-11th and Mary\08_Plans_Drawings\20_Sheets\2200923-C31-CG001.dwg, C303, 4/12/2023 3:18:06 PM, 1:1

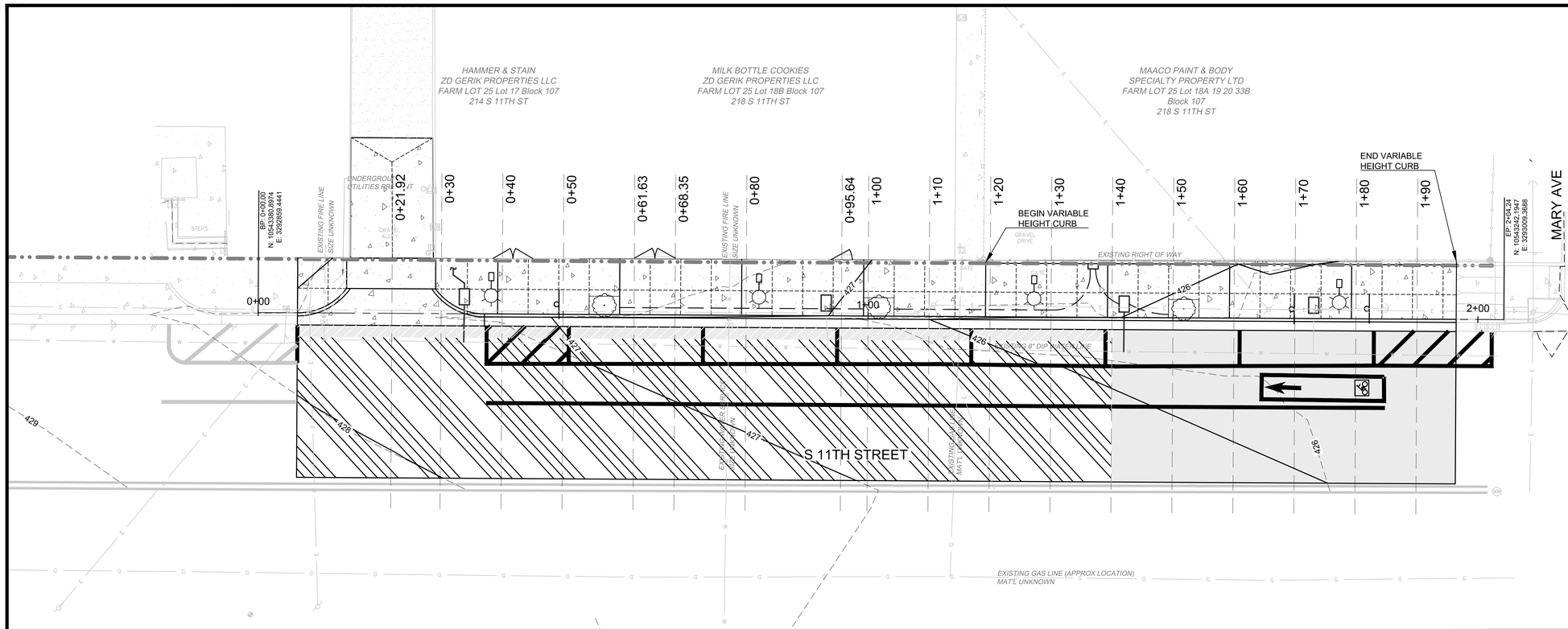

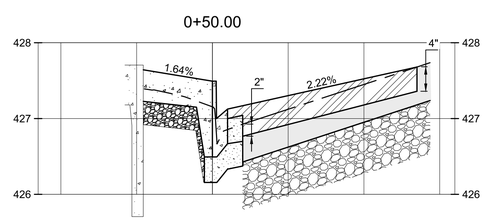

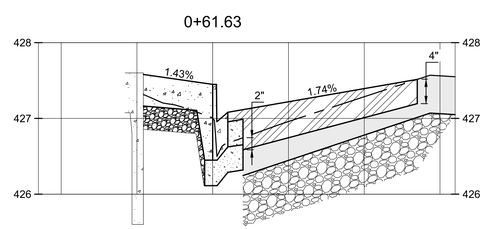

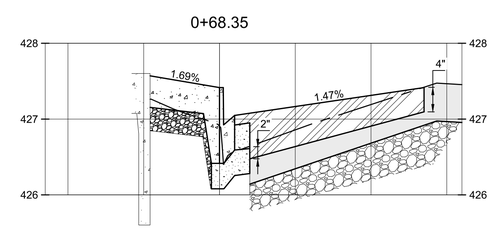

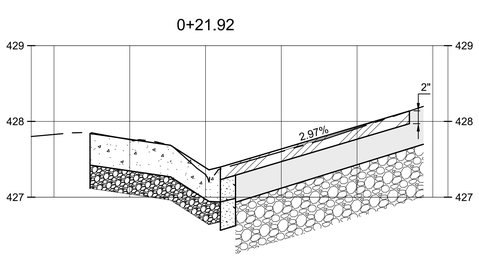

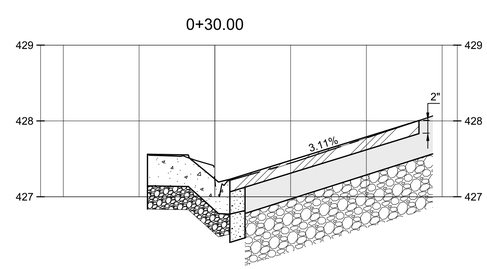

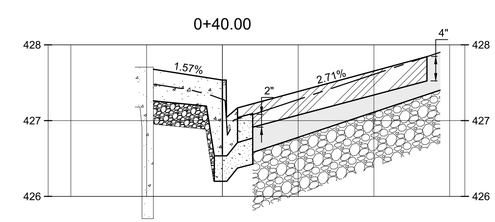

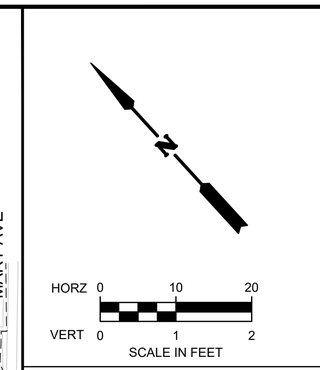

LEGEND

- EXISTING CONTOURS
- PROPOSED CONTOURS
- EXISTING GROUND SECTION
- PROPOSED GROUND SECTION
- EXISTING HMAC PAVEMENT
- EXISTING FLEXIBLE BASE
- PROPOSED HMAC PAVEMENT
- PROPOSED FLEXIBLE BASE
- PROPOSED REINFORCED CONCRETE PAVEMENT
- PROPOSED CEMENT STABILIZED BASE

!!!CAUTION!!!
EXISTING OVERHEAD UTILITIES IN VICINITY. CONTRACTOR SHALL EXERCISE EXTREME CAUTION WHEN WORKING NEAR ELECTRIC FACILITIES.

!!!WARNING!!!
THE ENGINEER ASSUMES NO RESPONSIBILITY FOR THE ACCURACY OF THE LOCATION OF UNDERGROUND UTILITIES. THE CONTRACTOR SHALL BE RESPONSIBLE FOR LOCATION AND AVOIDING ALL EXISTING UTILITIES BY CALLING THE 'ONE CALL' LOCATOR SERVICE AT (800)344-8377 AT LEAST 48 HOURS PRIOR TO CONSTRUCTION.

CP&Y, INC.
TEXAS REGISTERED ENGINEERING FIRM
TBPE F-1741

STATE OF TEXAS
DAVID L. MAREK
#83327
REGISTERED PROFESSIONAL ENGINEER
4-14-2023

NO.	REVISION	BY	DATE

VERIFY SCALE 0 1"
BAR LENGTH EQUALS ONE INCH ON ORIGINAL DRAWING. VERIFY LENGTH ON THIS SHEET AND ADJUST SCALE ACCORDINGLY.

CITY OF WACO
SOUTH 11TH STREET IMPROVEMENTS

CROSS SECTIONS
STA. 0+20 TO 0+68.35

DESIGN: DLM
DRAWN: CDG
REVIEW: DLM
CP&Y: CWAC2200996
CLIENT:

SHEET
C350

PRINTED BY: emcdougald DATE: 3/24/2023
FILE PATH: G:\Projects\CWAC2200923-11th and Mary\08_Plans_Drawings\20_Sheets\2200923-C31-CG001.dwg, C350
G:\Projects\CWAC2200923-11th and Mary\08_Plans_Drawings\20_Sheets\2200923-C31-CG001.dwg, C350, 4/12/2023 3:18:08 PM, 1:1

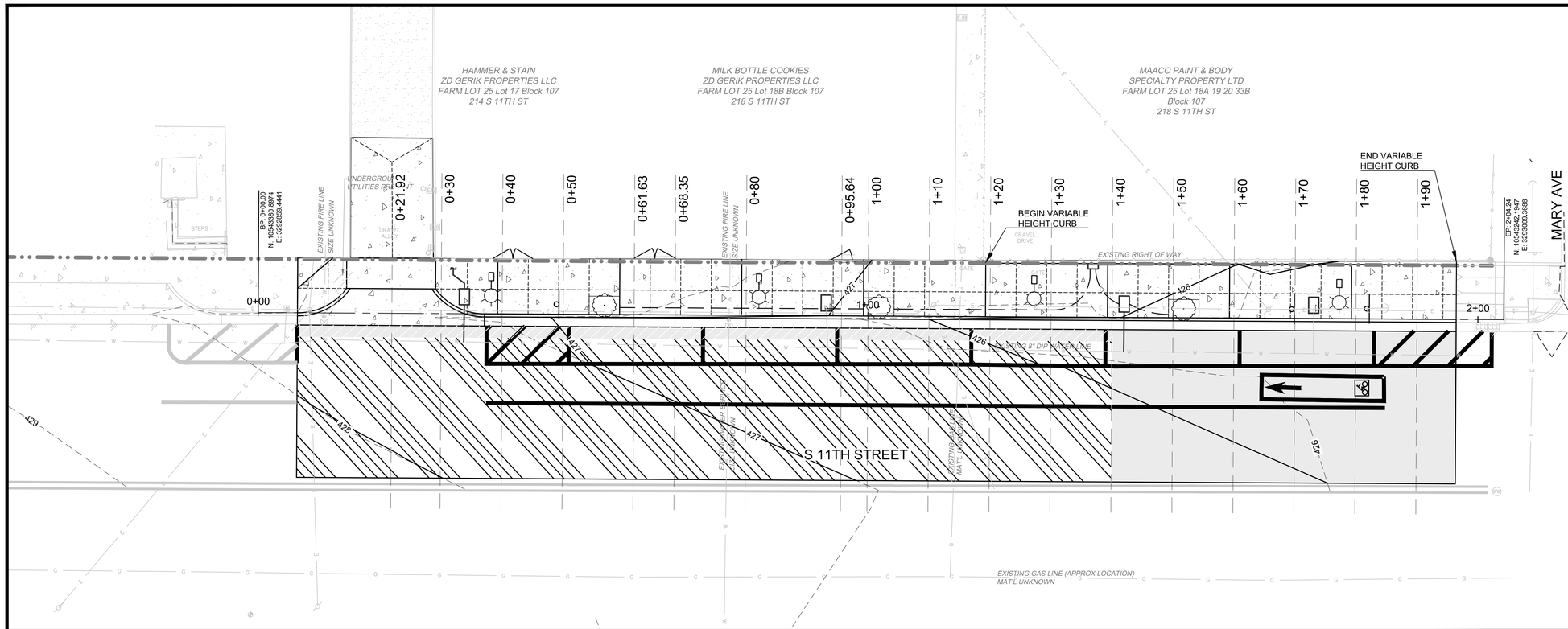

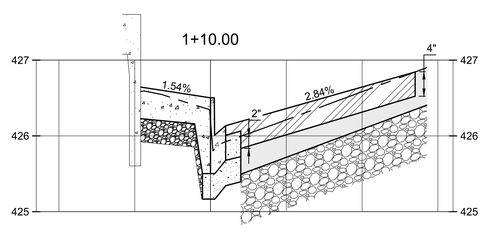

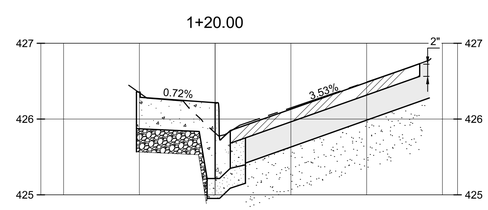

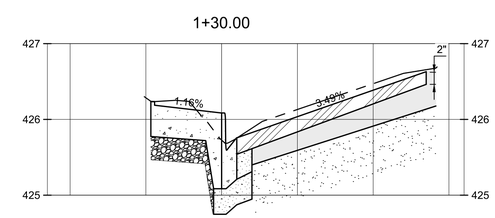

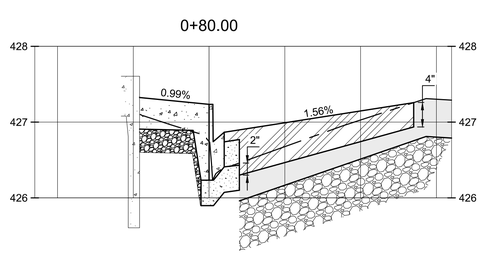

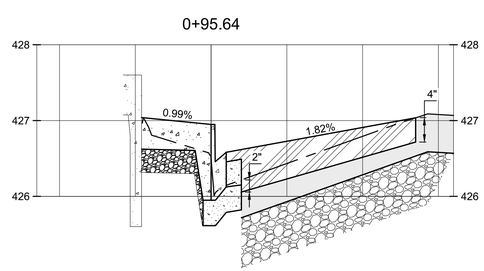

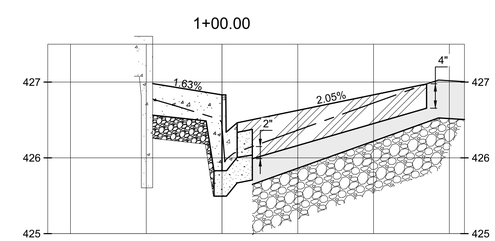

HORZ 0 10 20
VERT 0 1 2
SCALE IN FEET

LEGEND

- EXISTING CONTOURS
- PROPOSED CONTOURS
- EXISTING GROUND SECTION
- PROPOSED GROUND SECTION
- EXISTING HMAC PAVEMENT
- EXISTING FLEXIBLE BASE
- EXISTING CEMENT TREATED BASE
- PROPOSED HMAC PAVEMENT
- PROPOSED FLEXIBLE BASE
- PROPOSED REINFORCED CONCRETE PAVEMENT
- PROPOSED CEMENT STABILIZED BASE

!!!CAUTION!!!
EXISTING OVERHEAD UTILITIES IN VICINITY. CONTRACTOR SHALL EXERCISE EXTREME CAUTION WHEN WORKING NEAR ELECTRIC FACILITIES.

!!!WARNING!!!
THE ENGINEER ASSUMES NO RESPONSIBILITY FOR THE ACCURACY OF THE LOCATION OF UNDERGROUND UTILITIES. THE CONTRACTOR SHALL BE RESPONSIBLE FOR LOCATION AND AVOIDING ALL EXISTING UTILITIES BY CALLING THE 'ONE CALL' LOCATOR SERVICE AT (800)344-8377 AT LEAST 48 HOURS PRIOR TO CONSTRUCTION.

CP&Y, INC.
TEXAS REGISTERED ENGINEERING FIRM
TBPE F-1741

STATE OF TEXAS
DAVID L. MAREK
#83327
REGISTERED
PROFESSIONAL ENGINEER
4-14-2023

NO.	REVISION	BY	DATE

VERIFY SCALE 0 1"
BAR LENGTH EQUALS ONE INCH ON ORIGINAL DRAWING. VERIFY LENGTH ON THIS SHEET AND ADJUST SCALE ACCORDINGLY.

CITY OF WACO
SOUTH 11TH STREET IMPROVEMENTS

CROSS SECTIONS
STA. 0+80 TO 1+30

DESIGN: DLM
DRAWN: CDG
REVIEW: DLM
CP&Y: CWAC2200996
CLIENT:

SHEET
C351

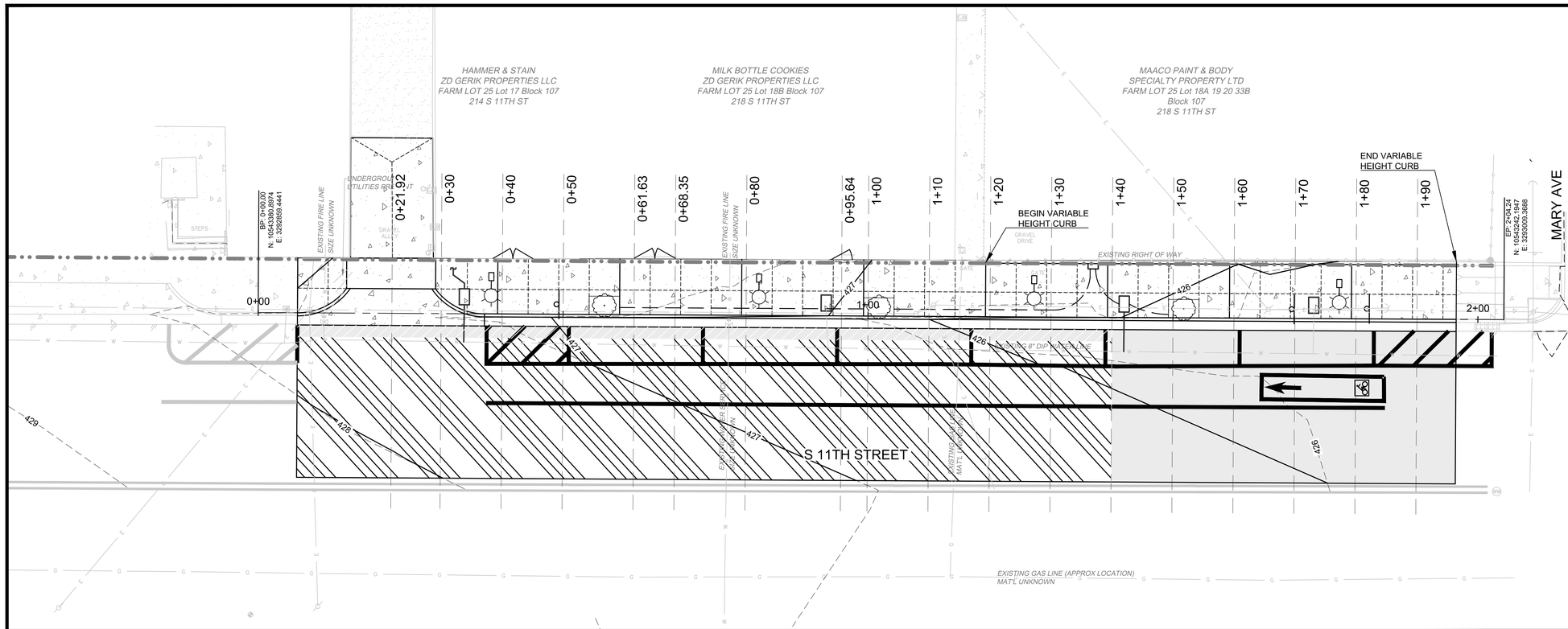

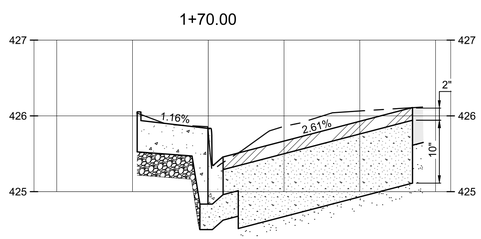

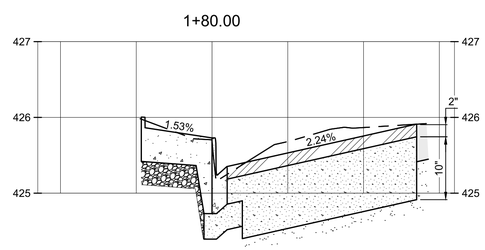

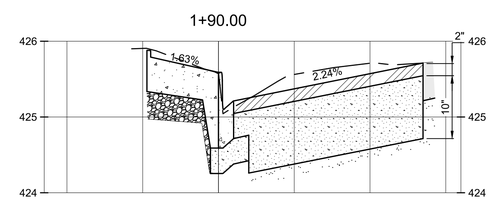

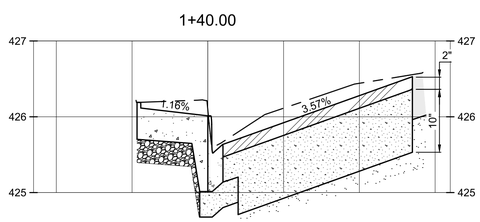

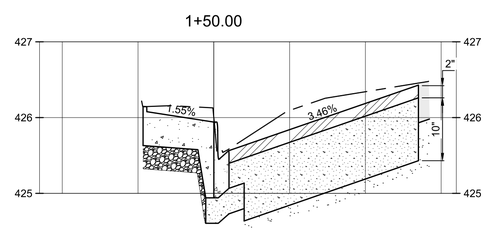

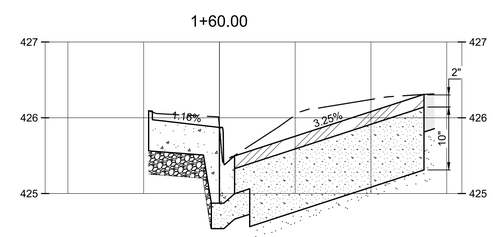

HORZ 0 10 20
VERT 0 1 2
SCALE IN FEET

LEGEND

- EXISTING CONTOURS
- PROPOSED CONTOURS
- EXISTING GROUND SECTION
- PROPOSED GROUND SECTION
- EXISTING HMAC PAVEMENT
- EXISTING FLEXIBLE BASE
- EXISTING CEMENT TREATED BASE
- PROPOSED HMAC PAVEMENT
- PROPOSED FLEXIBLE BASE
- PROPOSED REINFORCED CONCRETE PAVEMENT
- PROPOSED CEMENT STABILIZED BASE

!!!CAUTION!!!
EXISTING OVERHEAD UTILITIES IN VICINITY. CONTRACTOR SHALL EXERCISE EXTREME CAUTION WHEN WORKING NEAR ELECTRIC FACILITIES.

!!!WARNING!!!
THE ENGINEER ASSUMES NO RESPONSIBILITY FOR THE ACCURACY OF THE LOCATION OF UNDERGROUND UTILITIES. THE CONTRACTOR SHALL BE RESPONSIBLE FOR LOCATION AND AVOIDING ALL EXISTING UTILITIES BY CALLING THE 'ONE CALL' LOCATOR SERVICE AT (800)344-8377 AT LEAST 48 HOURS PRIOR TO CONSTRUCTION.

CP&Y, INC.
TEXAS REGISTERED ENGINEERING FIRM
TBPE F-1741

STATE OF TEXAS
DAVID L. MAREK
#83327
REGISTERED
PROFESSIONAL ENGINEER
4-14-2023

NO.	REVISION	BY	DATE

VERIFY SCALE 0 1"
BAR LENGTH EQUALS ONE INCH ON ORIGINAL DRAWING. VERIFY LENGTH ON THIS SHEET AND ADJUST SCALE ACCORDINGLY.

CITY OF WACO
SOUTH 11TH STREET IMPROVEMENTS

CROSS SECTIONS
STA. 1+40 TO 1+80

DESIGN: DLM
DRAWN: CDG
REVIEW: DLM
CP&Y: CWAC2200996
CLIENT:

SHEET
C352

PRINTED BY: emcdougald DATE: 3/24/2023
FILE PATH: G:\Projects\CWAC2200923-11th and Mary\08_Plans_Drawings\20_Sheets\2200923-C31-CG001.dwg, C352
G:\Projects\CWAC2200923-11th and Mary\08_Plans_Drawings\20_Sheets\2200923-C31-CG001.dwg, C352, 4/12/2023 3:18:12 PM, 1:1

PC	120V. PHOTOCELL
	NON-FUSIBLE SAFETY SWITCH, SIZE AS NOTED (A RATING/POLES)
	FUSIBLE SAFETY SWITCH, SIZE AS NOTED (AMP RATING/POLES)
	COMBINATION MOTOR STARTER
VFD	FACTORY WIRED CONTROLLER OR EQUIPMENT
	MOTOR CONNECTION
UH	UNIT HEATER CONNECTION
	DUCT HEATER CONNECTION
J	JUNCTION BOX
	PANELBOARD - FLUSH MOUNTED
	PANELBOARD - SURFACE MOUNTED
XRIPLIN	X-RAY ISOLATION PANEL LINE ISOLATION MONITOR
IPLIM	ISOLATION PANEL LINE ISOLATION MONITOR
C	CLOCK, SINGLE FACE - CLOCK AND RECEPTACLE AS SPECIFIED.
CDF	CLOCK, DOUBLE FACE - CLOCK AND RECEPTACLE AS SPECIFIED.
C IT	INTERVAL TIMER
MGAP	MEDICAL GAS ALARM PANEL
LPA	MEDICAL GAS LINE PRESSURE ALARM
MGPS	MEDICAL GAS PRESSURE SWITCH
SC	SECURITY SYSTEM CONTROL PANEL
DSDJ	DOOR SWITCH MOUNTED IN DOOR JAMB
DRB	DOOR RELEASE PUSH BUTTON
CR	CARD READER
MD	MOTION DETECTOR
	CIRCUIT HOMERUN - ARROWHEADS INDICATE QUANITY OF CIRCUITS
	EXTERIOR CONDUIT BELOW GRADE OR CONCEALED CONDUIT IN SLAB
	CONCEALED CONDUIT
	BURIED, UNDERGROUND CABLE

LIGHTING

5	DESIGNATES FIXTURE TYPE - SEE LIGHTING FIXTURE SCHEDULE
	NORMAL BRANCH SURFACE OR RECESSED FLUORESCENTFIXTURE (TYPE DETERMINES MOUNTING)
	CRITICAL BRANCH SURFACE OR RECESSED FLUORESCENT FIXTURE (TYPE DETERMINES MOUNTING)
	LIFE-SAFETY BRANCH SURFACE OR RECESSED FLUORESCENT FIXTURE (TYPE DETERMINES MOUNTING)
	NORMAL BRANCH SURFACE OR RECESSED FIXTURE (TYPE DETERMINES MOUNTING)
	CRITICAL BRANCH SURFACE OR RECESSED FIXTURE(TYPE DETERMINES MOUNTING)
	LIFE-SAFETY BRANCH SURFACE OR RECESSED FIXTURE(TYPE DETERMINES MOUNTING)
	NORMAL BRANCH SURFACE OR SUSPENDED FLUORESCENT FIXTURE (TYPE DETERMINES MOUNTING)
	CRITICAL BRANCH SURFACE OR SUSPENDED FLUORESCENT FIXTURE (TYPE DETERMINES MOUNTING)
	LIFE-SAFETY BRANCH SURFACE OR SUSPENDED FLUORESCENTFIXTURE (TYPE DETERMINES MOUNTING)
	NORMAL BRANCH WALL BRACKET FIXTURE
	CRITICAL BRANCH WALL BRACKET FIXTURE
	LIFE-SAFETY BRANCH WALL BRACKET FIXTURE
	EXIT LIGHT, PROVIDE DIRECTIONAL ARROWS AS INDICATEDON PLANS
	BATTERY POWERED EMERGENCY LIGHT
	TRACK LIGHTING
	GROUND AND POLE MOUNTED SITE FIXTURES

SWITCHES

S	SINGLE POLE SWITCH	48" A.F.F
$_2$	DOUBLE POLE SWITCH - CENTER OFF	48" A.F.F
$_3$	THREE WAY SWITCH	48" A.F.F
$_4$	FOUR WAY SWITCH	48" A.F.F
$_K$	SINGLE POLE SWITCH - KEY OPERATED	48" A.F.F
$_D$	DIMMER SWITCH	
$_V$	VARIABLE INTENSITY CONTROL	
$_T$	INTERVAL TIMER CONTROL SWITCH	
$_P$	SINGLE POLE SWITCH WITH PILOT LIGHT	48" A.F.F
$_{OC}$	OCCUPANCY SENSOR SWITCH	
$_M$	MOTOR RATED SWITCH WITH THERMAL OVERLOAD	
OC	OCCUPANCY SENSOR CEILING MOUNTED	
DS	DAYLIGHT SENSOR - CEILING MOUNTED	

ABBREVIATIONS

ABC	ABOVE COUNTER	
AFF	ABOVE FINISHED FLOOR	
AFG	ABOVE FINISHED GRADE	
C	RED- EMERGENCY POWER	
CLG	CEILING	
FBO	FURNISHED BY OTHERS	
IG	ISOLATED GROUND	
S	SAFETY TYPE	
SMH	SPECIAL MOUNTING HEIGHT- AS NOTED OR SEE SPECS	
TV	TELEVISION	
WP	WEATHERPROOF	

TYPICAL MOUNTING

THE CONTRACTOR SHALL COORDINATE THE MOUNTING HEIGHT OF ALL FIXTURES DEVICES, AND OUTLETS WITH ARCHITECTURAL PLANS AND ELEVATIONS. SPECIAL MOUNTING HEIGHTS SHOWN ON THE PLANS SHALL TAKE PRECEDENCE OVER THOSE GIVEN BELOW. ALL MOUNTING HEIGHTS ARE FROM FINIDHED FLOOR TO CENTERLINE OF DEVICE, UNLESS NOTED OTHERWISE.

LIGHTING FIXTURES	WALL MOUNTED, SCONCE WALL MOUNTED, ABOVE MIRROR WALL MOUNTED, ABOVE DOOR WALL MOUNTED, ABOVE STAIR LANDING INSOFFIT WALL MOUNTED, BESIDE DOOR STEP MOUNTED WALL MOUNTED, NEAR GRADE WALL MOUNTED, NEAR ROOF	6'-6" 0'-8" ABOVE TOP OF MIRROR CENTER BETWEEN FRAME & CEILING 7'-0" (SEE ARCHITECTURAL DETAIL) 6'-0" (SEE ACHITECTURAL) 8'-0" ABOVE GRADE LEVEL 2'-6" BELOW PARAPET
SWITCHES	WALL SWITCHES AND DIMMERS MANUAL MOTOR STARTERS	3'-10" 3'-10"
RECEPTACLES	WALL ABOVE COUNTER WITHOUT BACKSPLASH ABOVE COUNTER WITH BACKSPLASH IN O.R.'S X-RAY FILM ILLUMINATORS FOR TELEVISION WALL HUNG SINKS (GFCI) PHYSICAL THERAPY (GCFI) CLOCK	1'-6" 0'-8" ABOVE TOP OF COUNTER 0'-4" ABOVE TOP OF BACKSPLASH 1'-6" 2" BELOW AND 2" TO THE RIGHT OF LOWER RIGHT HAND CORNER (SAME AS TV OUTLET) 3'-6" 3'-0" 1'-0 BELOW CEILING
MULTIOUTLET RACEWAY	WALL ABOVE COUNTER WITHOUT BACKSPLASH ABOVE COUNTER WITH BACKSPLASH	3'-0" 0'-8" ABOVE TOP OF COUNTER 0'-4" ABOVE TOP OF BACKSPLASH
TELEPHONE	DESK/TABLE WALL TELEPHONE PAY TELEPHONE ABOVE COUNTER WITHOUT BACKSPLASH ABOVE COUNTER WITH BACKSPLASH PAT TELEPHONE, HANDICAPPED	1'-6" 3'-10" 3'-10" 0'-8" ABOVE TOP OF COUNTER 0'-4" ABOVE TOP OF BACKSPLASH (SEE ARCHITECTURAL DETAIL)
DATA OUTLETS	WALL ABOVE COUNTER WITHOUT BACKSPLASH ABOVE COUNTER WITH BACKSPLASH	1'-6" 0'-8" ABOVE TOP OF COUNTER 0'-4" ABOVE TOP OF BACKSPLASH
ELECTRICAL EQUIPMENT	SAFETY SWITCH MOTOR STARTER PANELBOARD COMMUNICATION CABINET	6'-6" TO TOP OF ENCLOSURE 6'-6" TO TOP OF ENCLOSURE 6'-6" TO TOP OF ENCLOSURE 6'-6" TO TOP OF ENCLOSURE
TV CABLE OUTLET	WALL ARMOIRES WALL BRACKET	1'-6" 0'-4" ABOVE SHELF FOR TV CENTERLINE OF BRACKET
CONTROL/SECURITY	DOOR ALARM PUSHBOTTON DOOR ACCESS KEYPAD CCTV CAMERA CCTV MONITOR	3'-10" 3'-10" 3'-10" 0'-6" BELOW CEILING LEVEL -
FIRE ALARM	MANUAL PULL CHIME, HORN AND/OR STROBE SMOKE, HEAT DETECTORS CONTROL PANEL, ANNUNCIATOR MAGNETIC DOOR HOLDER	3'-10" 6'-8" OR 0'-6" BELOW CEILING (WHICHEVER IS LOWER) CEILING 6'-6" TO TOP OF ENCLOSURE 0'-8" DOWN FROM TOP OF DOOR
NURSE CALL	EMERGENCY PULL CORD STATION @ TOILET @SHOWER SINGLE OR DUAL PATIENT STATION CODE BLUE STAFF AND DUTY STATION DOE AND ZONE LIGHTS NURSE PRESENCE STATION NURSE CALL MASTER STATION NURSE CALL TERMINAL CABINET	3'-10" 3'-6" AT HEIGHT OF SHOWER HEAD 3'-10" 3'-10" 3'-10" CEILING 3'-10" 0'-8" ABOVE COUNTER 6'-6" TO TOP OF ENCOLSURE
MONITOR	WALL ABOVE COUNTER WALL BRACKET SOFFIT	1'-6" 0'-8" ABOVE TOP OF COUNTER CENTERLINE OF BRACKET (SEE ARCHITECTURAL DETAIL)

TELEPHONE/DATA

T	TELEPHONE (BACKBOX WITH CONDUIT)	1'-6" AFF TO CL
W	WALL TELEPHONE (BACKBOX WITH CONDUIT)	4'-6" AFF TO CL
	TELEPHONE, SPECIAL MOUNTING HEIGHT (BACKBOX WITH CONDUIT)	AS NOTED SEE SPECS.
	TELEPHONE FLOOR BOX	
C	DATA/TELEPHONE (BACKBOX WITH CONDUIT)	1'-6" AFF TO CL
	COMBINATION DATA/TELEPHONE, SPECIAL MOUNTING HEIGHT (BACKBOX WITH CONDUIT)	AS NOTED SEE SPECS.
	DATA (BACKBOX WITH CONDUIT)	1'-6" AFF TO CL
	DATA, SPECIAL MOUNTING HEIGHT (BACKBOX WITH CONDUIT)	AS NOTED SEE SPECS.
	DATA FLOOR BOX	

POWER - RECEPTACLES

	120V. DUPLEX RECEPTACLE - (REFER TO RECEPTACLE ABBREVIATIONS FOR EXCEPTIONS
42"	120V. DUPLEX RECEPTACLE - SPECIAL MOUNTING HEIGHT (REFER TO RECEPTACLE ABBREVIATIONS FOR EXCEPTIONS)
	120V. QUADRUPLEX RECEPTACLE - (REFER TO RECEPTACLE ABBREVIATIONS FOR EXCEPTIONS)
42"	120V. QUADPLEX RECEPTACLE - SPECIAL MOUNTING HEIGHT (REFER TO RECEPTACLE ABBREVIATIONS FOR EXCEPTIONS)
	240V., 2-POLE, SINGLE RECEPTACLE, RATING AS SHOWN ON PLANS
	120V. GFCI DUPLEX RECEPTACLE - (REFER TO RECEPTACLE ABBREVIATIONS FOR EXCEPTIONS
	120V. GFCI QUADRUPLEX RECEPTACLE - (REFER TO RECEPTACLE ABBREVIATIONS FOR EXCEPTIONS)
	CONNECTION FOR FILM ILLUMINATOR, COORDINATE ROUGH-IN PRIOR TO INSTALLATION
C	WIREMOLD - LENGTH AS REQUIRED - EMERGENCY POWER
	WIREMOLD - LENGTH AS REQUIRED - NORMAL POWER
GM	GROUND JACK MODULE
GB	GROUNDING COLLECTION BUS
RGM	GROUND AND RECEPTACLE MODULE

FIRE ALARM

V	FIRE ALARM VISUAL STATION - LIGHT ONLY
F	FIRE ALARM MANUAL PULL STATION
F	FIRE ALARM HORN/VISUAL
M	MAGNETIC DOOR HOLDER
H	HEAT DETECTOR
SD	DUCT SMOKE DETECTOR
S	SMOKE DTECTOR
FS	SPRINKLER SYSTEM FLOW SWITCH
FACP	FIRE ALARM CONTROL PANEL
RA	FIRE ALARM REMOTE ANNUNCIATOR

ELECTRICAL ABBREVIATIONS

ABBR	DEFINITION	ABBR	DEFINITION
A	AMPERE	JB	JUNCTION BOX
ABC	ABOVE COUNTER	KV	KILOVOLT
AC	ALTERNATING CURRENT	KVA	KILOVOLT-AMPERE
AF	AMPERE FUSE	KW	KILOWATT
AFF	ABOVE FINISHED FLOOR	LTG	LIGHTING
AHU	AIR HANDLING UNIT	MAX	MAXIMUM
KAIC	AMPS INTERRUPTING CAPACITY x1000	MCB	MAIN CIRCUIT BREAKER
AT	AMPERE TRIP	MCC	MOTOR CONTROL CENTER
ANN	ANNUNCIATOR	MCM	CIRCULAR MILS, THOUSANDS
APP	APPROXIMATE	MECH	MECHANICAL
ARCH	ARCHITECT	MFR	MANUFACTURER
ATS	AUTOMATIC TRANSFER SWITCH	MGAP	MEDICAL GAS ALARM PANEL
AWG	AMERICAN WIRE GAUGE	MLO	MAIN LUGS ONLY
BLDG	BUILDING	MTD	MOUNTED
BSMT	BASEMENT	MTG	MOUNTING
C	CONDUIT	NEC	NATIONAL ELECTRICAL CODE
CAB	CABINET	NTS	NOT TO SCALE
CB	CIRCUIT BREAKER	PNL	PANEL
CKT	CIRCUIT	PH	PHASE
CLG	CEILING	P	POLE
CL	CENTER LINE	PFB	PROVISIONS FOR BREAKER
CT	CURRENT TRANSFORMER	PA	PUBLIC ADDRESS
CU	COPPER	RECP	RECEPTACLE
DISC	DISCONNECT	REFRIG	REFRIGERATOR
DN	DOWN	REQD	REQUIRED
DWG	DRAWING	SN	SOLID NEUTRAL
EA	EACH	SPKR	SPEAKER
EDF	ELECTRIC DRINKING FOUNTAIN	SPEC	SPECIFICATION
EF	EXHAUST FAN	SWBD	SWITCHBOARD
ELEV	ELEVATOR	SWGR	SWITCHGEAR
EP	EXPLOSION-PROOF	TEL	TELEPHONE
EQPT	EQUIPMENT	TTB	TELPHONE TERMINAL BOARD
EXTG	EXISTING	TV	TELEVISION
FA	FIRE ALARM	TVSS	TRANSIENT VOLT. SURGE SUPPRESSOR
FACP	FIRE ALARM CONTROL PANEL	TYP	TYPICAL
FCU	FAN COIL UNIT	UC	UNDER COUNTER
FLA	FULL LOADS AMPS	UH	UNIT HEATER
FLR	FLOOR	V	VOLT
GFCI	GROUND FAULT CURCUIT INTERRUPTER	VA	VOLTAMPERE
GND	GROUND	W	WATT
HTR	HEATER	WH	WATER HEATER
HT	HEIGHT	WP	WEATHER-PROOF
HP	HORSE POWER	W/	WITH
HW	HOT WATER	W/O	WITHOUT
HWC	HOT WATER CIRCULATING	XFMR	TRANSFORMER
INCAND	INCANDESCENT	XFR	TRANSFER

GENERAL NOTES TO CONTRACTOR

1. THE CONTRACTOR SHALL NOT DEVIATE FROM DESIGN. THE CONTRACTOR SHALL FURNISH AND INSTALL ALL WORK TO MATCH THE DRAWINGS AS SHOWN. ANY DEVIATION FROM THE DESIGN BY THE CONTRACTOR WILL RESULT IN THE CONTRACTOR PAYING ENGINEER DIRECTLY TO UPDATE ANY CITY REQUIRED CHANGES ON CITY DRAWINGS. THE FEE AMOUNT WILL BE DETERMINED BASED ON EXTENT OF CHANGES AND TIMEFRAME. THIS DOES NOT SUBSTITUTE FOR AS-BUILT RECORD DRAWINGS THAT THE CONTRACTOR SHALL FURNISH TO OWNER. AS-BUILT AND SHOP DRAWINGS ARE STILL REQUIRED AS PER STANDARD INDUSTRY PRACTICE.

2. THE CONTRACTOR SHALL CARRY A LINE ITEM ALLOWANCE CONTINGENCY OF $1,500 WHICH SHALL BE USED FOR ANY INCIDENTAL CITY INSPECTION ITEMS THAT COME UP AT THE LAST MINUTE AND WERE NOT BROUGHT UP IN THE PLAN CHECK AND AWARDING OF THE PERMIT. IF NO SUCH ITEMS ARE BROUGHT UP BY THE CITY DURING INSPECTIONS (INCLUDING FINAL) CITY AWARDS THE C.O. FOR THE OWNER TO MOVE IN THEN THE ALLOWANCE SHALL BE CREDITED IN FULL TO THE OWNER.

3. GC/CONSTRUCTION MANAGER SHALL BE RESPONSIBLE TO CROSS COORDINATE THE MEP DRAWINGS WITH THE ARCHITECTURAL SPECIFICALLY, BUT NOT LIMTED TO, POWER AND DATA OUTLETS LIGHT FIXTURES, LIGHT FIXTURES SWITCHING, SUPPLY OF WATER FOR COFFEE, REFRIGERATOR, DRINKING WATER DEVICES ETC.

4. WHERE NEW LIGHTS OR RECEPTACLES ARE DESIGNED TO BE CONNECTED TO AN EXISTING CIRCUIT, ELECTRICIAN SHALL TRACE EXSTING CIRCUIT TO DETERMINE CIRCUIT LOADING. THE LOAD ON A 20 AMP CIRCUIT SHALL NOT EXCEED 16 AMPS WHERE THIS CANNOT ACHIEVED, CONTRACTOR SHALL CONTACT THE ENGINEER FOR ALTERNATIVE CIRCUITING INSTRUCTIONS.

ELECTRICAL SHEET LIST

Sheet Number	Sheet Name
E1.0	LEGEND
E1.1	DIAGRAM
E1.2	SCHEDULE
E1.3	ELECTRICAL DETAILS
E2.1	LIGHTING FLOOR PLAN

CP&Y INC.
TEXAS REGISTERED ENGINEERING FIRM
TBPE F-1741

STATE OF TEXAS
BRADY K. KROLL
110044
LICENSED
PROFESSIONAL ENGINEER
12-12-22

NO.	REVISION	BY	DATE

VERIFY SCALE 1" 0
BAR LENGTH EQUALS ONE INCH ON ORIGINAL DRAWING. VERIFY LENGTH ON THIS SHEET AND ADJUST SCALE ACCORDINGLY.

CITY OF WACO
SOUTH 11TH STREET IMPROVEMENTS

DESIGN:	2246
DRAWN:	AH
REVIEW:	BK
CP&Y:	
CLIENT:	

TRILOGY ENGINEERING
ELECTRICAL PLUMBING MECHANICAL
TBPE # F-14307
WWW.TRILOGYENG.COM

SHEET
E1.0

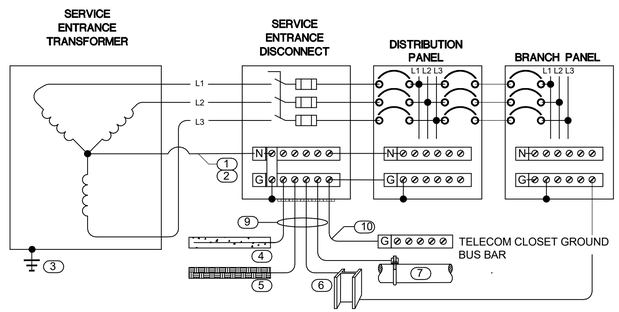

KEYED NOTES:

1. REFER TO ONE LINE AND PANEL SCHEDULES FOR CONDUCTOR SIZING NOT SHOWN ON GROUNDING SCHEMATIC.
2. UNO, ALL GROUNDING CONDUCTORS SHALL BE COPPER TYPE THHN/THWN.
3. TRANSFORMER GROUNDING PER UTILITY PROVIDER'S SPECIFICATION.
4. 20' OF MIN. 4AWG BARE COPPER CONDUCTOR ENCASED IN 2" MIN. OF CONCRETE FOUNDATION IN DIRECT CONTACT WITH EARTH.
5. 20' OF MIN. 4AWG BARE COPPER CONDUCTOR BURIED IN DIRECT CONTACT WITH EARTH AT 2' BELOW GRADE
6. CAD WELD CONNECTION TO BUILDING STEEL.
7. BONDING STRAP AT METAL COLD WATER AND GAS PIPING.
8. REFER TO I.T PROVIDER FOR GROUNDING SIZE
9. REFER TO RISER DIAGRAM FOR WIRE SIZE
10. TELECOM GROUND REFER TO IT CONTRACTOR FOR SIZE AND LOCATION

4 GROUNDING ONE-LINE DIAGRAM
N.T.S

PRIOR TO FINAL ORDERING OF PANELBOARDS, CIRCUIT BREAKERS AND ALL ASSOCIATED EQUIPMENT, THE CONTRACTOR SHALLL ARRANGE FOR AND PROVIDE TO THE ELECTRICAL ENGINEER OF RECORD VIA ARCHITECT LETTER FROM THE LOCAL POWER COMPANY ON THEIR LETTERHEAD STATING THE SHORT CIRCUIT FAULT CURRENT AVAILABLE AT THE SECONDARY OF THE UTILITY COMPANY TRANSFORMER.

INFORMATION SHALL BE USED TO DETERMINE THE FINAL A.I.C. RATINGS OF PANELBOARDS, METER CENTERS, MAIN DISCONNECT SWITCH AND CIRCUIT BREAKERS.

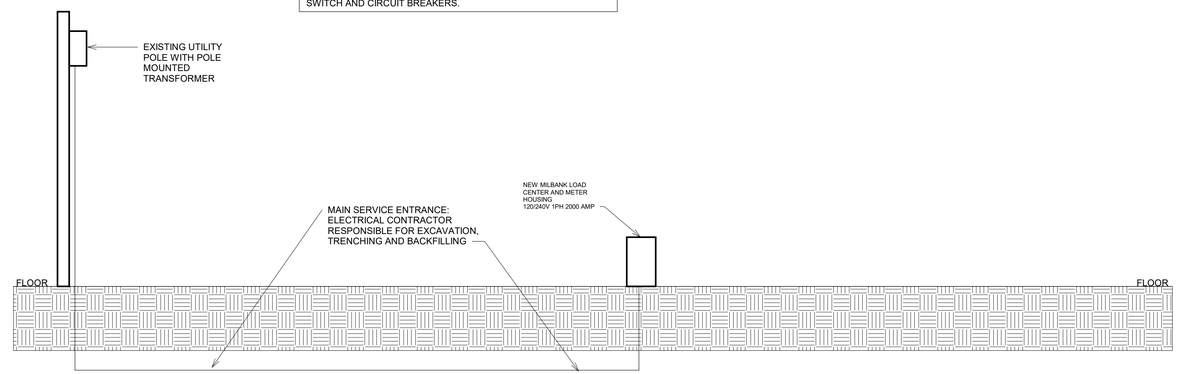

1 ELECTRICAL RISER DIAGRAM MULTI SPACE
N.T.S

ELECTRICAL SPECIFICATIONS

1. THE WORK INCLUDES PROVIDING NEW MATERIALS, FIXTURES, DEVICES AND ACCESSORIES NECESSARY FOR A COMPLETE FUNCTIONING ELECTRICAL SYSTEM. ALL WORK SHALL BE IN ACCORDANCE WITH LOCAL CODES OR ORDINANCES AND SUBJECT TO INSPECTION.

2. COMPLY WITH ALL LAWS APPLYING TO ELECTRICAL INSTALLATIONS IN EFFECT, AND WITH THE MOST RECENT EDITION OF THE NATIONAL ELECTRICAL CODE, ADA, APPLICABLE SECTIONS OF OTHER NFPA, OSHA, LIFE SAFETY CODES AND RECOMMENDATIONS, AND THE INTERIM AMENDMENTS IN EFFECT AT THE TIME OF THE PROPOSAL. ALL MATERIALS USED SHALL BE NEW AND SHALL CONFORM TO THE STANDARDS ESTABLISHED BY THE UNDERWRITERS LABORATORIES INCORPORATED.

3. THE INTENT OF THE DRAWINGS IS TO INDICATE THE GENERAL EXTENT OF WORK REQUIRED FOR THE PROJECT. THE DRAWINGS FOR ELECTRICAL WORK ARE DIAGRAMMATIC, SHOWING THE LOCATION, TYPE, DEVICES AND EQUIPMENT REQUIRED. THE DRAWINGS SHALL NOT BE SCALED FOR EXACT MEASUREMENTS. PROVIDE ALL FIXTURES, DEVICES, ACCESSORIES, OFFSETS, AND MATERIALS NECESSARY TO FACILITATE THE SYSTEM'S FUNCTIONING AS INDICATED BY THE DESIGN AND THE EQUIPMENT FURNISHED BY OTHERS.

4. TEMPORARY SERVICES: ARRANGE FOR SOURCES OF TEMPORARY CONSTRUCTION SERVICES. SUCH SERVICES SHALL BE NOMINALLY 120/240 VOLT, SINGLE-PHASE, THREE-WIRE FROM WHICH A COMPLETE SYSTEM OF TEMPORARY POWER AND LIGHTING CAN BE PROVIDED FOR ALL CONSTRUCTION NEEDS.

5. ELECTRICAL DESIGN FOR THIS INSTALLATION IS BASED ON FIELD INSPECTIONS FOR THE EXISTING BUILDING. ELECTRICAL CONTRACTOR IS TO FIELD VERIFY EXISTING CONDITIONS PRIOR TO BIDDING. ALLOWANCES ARE TO BE INCLUDED FOR UNFORESEEN EXISTING CONDITIONS THAT MAY EFFECT THE CONTRACTOR'S SCOPE OF WORK. MINOR DEVIATIONS REQUIRED FOR ACCOMPLISHING THE INTENT OF THIS DESIGN IS TO BE INCLUDED IN THIS ALLOWANCE.

6. ELECTRICAL CONTRACTOR TO FIELD VERIFY ALL EXISTING UNDERGROUND UTILITIES. ANY ITEM DAMAGED BY THIS CONTRACTOR IS TO BE REPAIRED IMMEDIATELY AND AT NO COST TO THE OWNER.

7. ROOF PENETRATIONS SHALL COMPLY WITH "SMACNA" AND "NRCA" STANDARDS, AND WITH THE REQUIREMENTS OF THE EXISTING ROOFING WARRANTY, IF APPLICABLE. DO NOT PERFORM ROOFING PENETRATIONS IN A MANNER WHICH WOULD VOID OR OTHERWISE LIMIT THE EXISTING ROOFING WARRANTY.

8. ELECTRICAL CONTRACTOR TO FIELD VERIFY ALL EXISTING EQUIPMENT AS SHOWN ON DESIGN DRAWINGS AND ARE IN GOOD WORKING CONDITION PRIOR TO RE-USING. IF EXISTING CONDITIONS ARE NOT AS SHOWN OR ARE NOT IN GOOD WORKING CONDITION, CONTRACTOR SHALL PROVIDE EQUIPMENT, CONDUIT, AND/OR WIRE INDICATED TO PROVIDE A "LIKE-NEW" AND CODE COMPLIANT INSTALLATION. CONTRACTOR IS RESPONSIBLE FOR RELOCATING ANY EXISTING ITEMS BEING REUSED. ANY EXISTING EQUIPMENT, CONDUIT OR WIRE NOT BEING REUSED SHALL BE REMOVED BY THIS CONTRACTOR.

9. ELECTRICAL DESIGN HAS BEEN BASED ON THE INSTALLATION OF 75 DEGREES C CONDUCTORS CONNECTED TO TERMINAL LUGS AND EQUIPMENT, U.L. LISTED FOR A MINIMUM 75 DEGREES C. CONDUCTORS TERMINATED ON EQUIPMENT OR DEVICES WITH A LOWER RATING (60 DEGREES C) OR NO RATING SHOWN, SHALL HAVE CONDUCTOR SIZE INCREASED TO CONFORM TO NEC TABLE 310-16 AND U.L. NO. 489 REQUIREMENTS.

10. DISCONNECT SWITCHES SHALL BE HEAVY-DUTY, QUICK-MAKE, QUICK-BREAK TYPE, NEMA 1 ENCLOSURE FOR INDOOR LOCATIONS (NEMA 3R FOR OUTDOOR LOCATIONS). SWITCHES SHALL BE AS MANUFACTURED BY SQUARE D, GENERAL ELECTRIC, OR CUTLER-HAMMER. PROVIDE FUSES AS MANUFACTURED BY BUSSMAN, GOULD-SHAWMUT, OR LITTLE-FUSE. ALL CONDUCTOR TERMINALS TO BE U.L. LISTED FOR A MINIMUM OF 75 DEGREES C. SWITCHES USED AS SERVICE ENTRANCE EQUIPMENT TO BE U.L. LISTED AS "SER" RATED EQUIPMENT.

11. PANELBOARDS SHALL BE AS MANUFACTURED BY SQUARE D, GENERAL ELECTRIC, CUTLER-HAMMER OR EATON CORP. MEETING U.L. STANDARDS 50 AND 67, WITH U.L. LABEL. PANELS USED AS SERVICE ENTRANCE EQUIPMENT TO BE U.L. LISTED AS "SER" RATED EQUIPMENT. BUS BARS SHALL BE COPPER.

12. BREAKERS: THERMAL MAGNETIC TYPE, QUICK-MAKE, QUICK-BREAK, BOLT-IN TYPE OF SINGLE UNIT CONSTRUCTION. TWO AND THREE POLE BREAKERS SHALL BE SINGLE UNIT COMMON TRIP TYPE. BREAKERS USED AS SWITCHES FOR 120V LIGHTING CIRCUITS SHALL BE APPROVED FOR THAT USE AND MARKED "SWD". ALL BREAKERS FOR HVAC AND REFRIGERATION EQUIPMENT SHALL BE "HACR" RATED BREAKERS.

13. CABINETS SHALL BE ONE PIECE CODE GAUGE GALVANIZED STEEL WITH MOUNTING STUDS, WIRING GUTTERS OF AMPLE SIZE AND KNOCKOUT FOR CONDUIT CONNECTIONS AS REQUIRED. BUS BARS SHALL BE 98 PER CENT CONDUCTIVE COPPER, ALUMINUM, OR COPPER-CLAD ALUMINUM. FRONTS SHALL BE ONE PIECE CODE GAUGE FURNITURE STEEL WITH ADJUSTABLE FASTENERS. PROVIDE A PLASTIC COVERED TYPEWRITTEN SCHEDULE IDENTIFYING ALL BRANCH CIRCUITS INSIDE EACH CABINET. RECESSED CABINETS TO BE INSTALLED WITH A MINIMUM (2) 3/4" SPARE CONDUITS STUBBED UP TO ACCESSIBLE CEILING SPACE.

14. GROUNDING SYSTEM: PERMANENTLY AND EFFECTIVELY GROUND ALL METALLIC CONDUIT, SUPPORTS, CABINETS, PANELBOARDS AND SYSTEM NEUTRAL CONDUCTORS. MAINTAIN CONTINUITY OF EQUIPMENT GROUND THROUGHOUT THE SYSTEM. GROUND CLAMPS SHALL BE APPROVED TYPE, SPECIFICALLY DESIGNED FOR GROUNDING. WHERE GROUNDING CONDUCTOR IS ENCLOSED IN CONDUIT, GROUND CLAMP SHALL BE OF A TYPE WHICH GROUNDS BOTH CONDUCTOR AND CONDUIT. ALL CIRCUITS INFLEXIBLE METAL OR PLASTIC CONDUIT SHALL INCLUDE A GROUND WIRE SIZED IN ACCORDANCE WITH NATIONAL ELECTRICAL CODE.

15. CONDUIT SHALL BE SIZED TO COMPLY WITH NEC FOR NUMBER AND SIZE OF CONDUCTORS INSTALLED, MINIMUM 24" BELOW GRADE. PROVIDE SCHEDULE 40 PVC PLASTIC OR RIGID STEEL CONDUIT BELOW GRADE, MINIMUM 3/4". PROVIDE ELECTRICAL METAL TUBING (EMT) MEETING FS W-C563, OR FLEXIBLE CONDUIT (IN LENGTHS 6' OR LESS) FOR INTERIOR LOCATIONS. EMT CONNECTORS AND COUPLING SHALL BE SET-SCREW TYPE. CLAMP CONDUIT TO BOXES WITH BUSHING INSIDE AND LOCKNUT OUTSIDE. 'MC' CABLE ACCEPTABLE FOR CONCEALED INSTALLATIONS.

16. ALL CONDUIT AND RACEWAY SYSTEMS TO BE INSTALLED WITH SEPARATE GROUND CONDUCTOR. CONDUIT SYSTEM IS NOT TO BE USED AS THE SOLE GROUNDING MEANS.

17. ALL SWITCHBOARDS, PANELBOARDS, DISCONNECT SWITCHES, AND CONTACTORS, SHALL BE PROVIDED WITH LUGS LABELED AND RATED FOR A MINIMUM 75 DEGREES C. SWITCHBOARDS, PANELBOARDS, DISCONNECT SWITCHES, CONTACTORS, AND TRANSFORMERS ARE TO BE "LISTED" AND "IDENTIFIED" AS RATED FOR A MINIMUM OF 75 DEGREES C CONDUCTOR TERMINATION.

18. CONDUCTORS: INSULATED SOFT ANNEALED 98 PER CENT PURE COPPER WITH COLOR CODING, B AND S GAUGE, #10 AND SMALLER TO BE SOLID, #8 AND LARGER TO BE STRANDED, MINIMUM #12 UNLESS OTHERWISE INDICATED. ALUMINUM CONDUCTOR WILL NOT BE ALLOWED. THHN MAY NOT BE USED UNDERGROUND, AT SERVICE ENTRANCE, OUTSIDE, OR IN WET LOCATIONS. ALL INSULATION TO BE RATED FOR 600 V AND TYPES AS FOLLOWS:

#10 AND SMALLER: THWN OR THHN
#8 TO #4/0: THWN OR THHN
SERVICE ENTRANCE: USE-RHW
OVER #4/0 ORDINARY SERVICE: THHN OR XHHN
OVER #4/0 WET OR HOT SERVICE: XHHW
WIRE THRU FLUORESCENT FIXTURES OR WITHIN 3' OF HEATING EQUIPMENT: THHN

19. DEVICES SHALL BE MANUFACTURED BY LEVITON "COMMERCIAL SPECIFICATION GRADE" OR EQUAL. ALL DEVICES AND COVER PLATES SHALL BE WHITE. STANDARD DUPLEX RECEPTACLES SHALL BE GROUNDING TYPE, 20A, NEMA WD-2 STANDARD 5-20R, SIDE WIRED, LEVITON #5342. LIGHT SWITCHES SHALL BE 20 AMP, 120 VOLT, LEVITON #1221-2. WHERE SWITCHES ARE GROUPED, PROVIDE GANG PLATES.

20. LIGHT FIXTURES AND LAMPS ARE FURNISHED AND INSTALLED BY ELECTRICAL CONTRACTOR ACCORDING TO U.B.C. STANDARDS,

22. THE ELECTRICAL CONTRACTOR SHALL REVIEW MATERIALS AT THE TIME OF DELIVERY AND IMMEDIATELY REPORT ANY DAMAGE OR MISSING PIECES.

23. EMERGENCY LIGHTING SHALL HAVE A MINIMUM OF 90 MIN. BATTERY BACK-UP, OR AS REQUIRED BY LOCAL CODE AUTHORITY.

24. LAYOUT BRANCH CIRCUIT WIRING AND ARRANGEMENT OF HOME RUNS FOR MAXIMUM ECONOMY AND EFFICIENCY. INCREASE WIRE SIZE IF VOLTAGE DROP EXCEEDS 3 PER CENT OR 100 FEET OF LENGTH.

25. CONCEAL WIRING SYSTEM ABOVE SUSPENDED CEILINGS OR IN WALL OR FLOOR CONSTRUCTION WHERE POSSIBLE. INSTALL CONDUITS PARALLEL TO BUILDING LINES, AND TO CLEAR ALL OPENING, DEPRESSIONS, PIPES, DUCTS, STRUCTURE, ETC.

26. INSTALL CONDUIT CONTINUOUS BETWEEN BOXES AND CABINETS WITH NO MORE THAN FOUR (4) 90 DEGREE BENDS. SECURELY FASTEN IN PLACE WITH STRAPS, HANGERS AND STEEL SUPPORTS AS REQUIRED. DO NOT SUPPORT CONDUIT FROM SUSPENDED CEILING GRID OR SUSPENSION WIRES. REAM CONDUIT ENDS BEFORE INSTALLATION AND THOROUGHLY CLEAN BEFORE INSTALLATION. OPENINGS SHALL BE PLUGGED OR COVERED TO KEEP CONDUIT CLEAN. TERMINALS ON SWITCHES AND OUTLET SHALL NOT BE USED TO "FEED THRU" TO THE NEXT SWITCH OR OUTLET.

27. ADJUSTING AND TESTING: ALL ELECTRICAL EQUIPMENT SHALL BE ADJUSTED AND TESTED FOR PROPER OPERATION. COMPLETED WIRING SYSTEM SHALL BE FREE FROM SHORT CIRCUITS.

28. TOUCH-UP OR REFINISH DAMAGED SURFACES OF FIXTURES AND EQUIPMENT, EXPOSED TO VIEW.

29. TELEPHONE CABLE TO BE FURNISHED AND INSTALLED BY OTHERS. ALL CABLING TO BE PLENUM RATED. ELECTRICAL CONTRACTOR TO PROVIDE NEW PLYWOOD BACKBOARD FOR NEW TELEPHONE TERMINAL BOARD. COORDINATE EXACT REQUIREMENTS WITH LOCAL TELEPHONE UTILITY REPRESENTATIVE AND OWNER.

30. REFER TO ARCHITECTURAL REFLECTED CEILING PLAN FOR EXACT LOCATION OF LIGHTING FIXTURES AND OTHER CEILING MOUNTED EQUIPMENT.

31. FOR EQUIPMENT FURNISHED BY OWNER OR OTHER CONTRACTORS: ELECTRICAL CONTRACTOR TO VERIFY EXACT LOAD, TYPE OF CONNECTION AND MOUNTING HEIGHT FOR EACH BOX OR EQUIPMENT ITEM TO BE INSTALLED. ALL HARD-WIRED CONNECTIONS TO EQUIPMENT TO BE MADE WITH FLEXIBLE LIQUID-TITE METAL CONDUIT WITH GREEN GROUND CONDUCTOR INSTALLED INSIDE RACEWAY. GROUND CONDUCTOR TO BE BONDED AT BOTH ENDS.

32. CONTACTORS SHALL BE SQUARE D, CLASS 8903, AS SHOWN ON THE PLANS, ELECTRICALLY OR MECHANICALLY HELD, DESIGNED FOR TWO-WIRE CNTRL CIRCUIT, FULLY RATED FOR ALL CLASSES OF INDUCTIVE AND NON-INDUCTIVE LOADS, AND RATED FOR CONTINUOUS CAPACITY AND POWER CIRCUIT VOLTAGE NOT LESS THAN INDICATED ON DRAWINGS. PROVIDE WITH NUMBER OF POLES INDICATED OR SPECIFIED. CONTACTORS SHALL BE FURNISHED WITH NEMA 1, SURFACE MOUNTED ENCLOSURES UNLESS CALLED FOR OTHERWISE ON DRAWINGS. EACH CONTACTOR SHALL BE PROVIDED WITH ENGRAVED LAMINATED PLASTIC NAMEPLATE WITH BLACK BACKGROUND AND 1/4" WHITE LETTERS TO DESIGNATE USE OF CONTRACTOR.

33. FIRE ALARM SYSTEM SHALL BE AN ADDRESSABLE SYSTEM, MULTIPLXD SIGNAL TRANSMISSION, DEDICATED TO FIRE-ALARM SERVICE ONLY. INSTALLER SHALL BE NICET CERTIFIED . A UL LISTED SYSTEM FROM ONE OF THE FOLLOWING MANUFACTURER'S SHALL BE UTILIZED:

NOTIFIER; A HONEYWELL COMPANY
GAMEWELL; A HONEYWELL COMPANY
SILENT KNIGHT; A HONEYWELL COMPANY
SIMPLEX GRINNELL; A TYCO COMPANY
SIEMENS BUILDING TECHNOLOGIES, FIRE SAFETY DIVISION
FEDERAL SIGNAL CORPORATION

34. ALL GFCI PROTECTIVE DEVICES SHALL BE READILY ACCESSIBLE AS IDENTIFIED IN NEC 2020

WIRE SIZING SCHEDULE SINGLE PHASE

CIRCUIT BREAKER	COPPER WIRE SIZE (INCLUDES NEUTRAL)
20 AMP	(3) 12, #12GR., 1/2"C.
25 AMP	(3) 10, #10GR., 1/2"C.
30 AMP	(3)10, #10GR., 3/4"C.
35 AMP	(3) 8, #10GR., 3/4"C.
40 AMP	(3) 8, #10GR., 3/4"C.
45 AMP	(3) 6, #10GR., 1"C.
50 AMP	(3) 6, #10GR., 1"C.
55 AMP	(3) 6, #10GR., 1"C.
60 AMP	(3) 4, #10GR., 1-1/4"C.
65 AMP	(3) 4, #8GR., 1-1/4"C.
70 AMP	(3) 4, #8GR., 1-1/4"C.
80 AMP	(3) 3, #8GR., 1-1/4"C.
90 AMP	(3) 2, #8GR., 1-1/4"C.
100 AMP	(2) 2, #8GR., 1-1/4"C.
125 AMP	(3) 1, #8GR., 1-1/2"C.
150 AMP	(3) 1/0, #6GR., 2"C.
200 AMP	(3) 3/0, #6GR., 2"C.
225 AMP	(3) 4/0, #4GR., 2-1/2"C.
250 AMP	(3) 250KCM, #4GR., 2-1/2"C.
400 AMP	(3) 600KCM, #3GR., 3-1/2"C.

WIRE SIZING SCHEDULE THREE PHASE

CIRCUIT BREAKER	COPPER WIRE SIZE (INCLUDES NEUTRAL)
20 AMP	(4) 12, #12GR., 1/2"C.
25 AMP	(4) 10, #10GR., 1/2"C.
30 AMP	(4) 10, #10GR., 3/4"C.
35 AMP	(4) 8, #10GR., 3/4"C.
40 AMP	(4) 8, #10GR., 3/4"C.
45 AMP	(4) 6, #10GR., 1"C.
50 AMP	(4) 6, #10GR., 1"C.
55 AMP	(4) 6, #10GR., 1"C.
60 AMP	(4) 4, #10GR., 1-1/4"C.
65 AMP	(4) 4, #8GR., 1-1/4"C.
70 AMP	(4) 4, #8GR., 1-1/4"C.
80 AMP	(4) 3, #8GR., 1-1/4"C.
90 AMP	(4) 2, #8GR., 1-1/4"C.
100 AMP	(4) 2, #8GR., 1-1/4"C.
125 AMP	(4) 1, #8GR., 1-1/2"C.
150 AMP	(4) 1/0, #6GR., 2"C.
200 AMP	(4) 3/0, #6GR., 2"C.
225 AMP	(4) 4/0, #4GR., 2-1/2"C.
250 AMP	(4) 250KCM, #4GR., 2-1/2"C.
400 AMP	(4) 600KCM, #3GR., 3-1/2"C.

NOTES
CONTRACTOR TO INCREASE WIRE SIZING FOR LONG RUNS OF WIRING FOR VOLTAGE DROP ALLOWANCE. VOLTAGE DRAP SHALL NOT EXCEED 3 PERCENT

TRILOGY ENGINEERING
ELECTRICAL PLUMBING MECHANICAL
TBPE # F-14307
WWW.TRILOGYENG.COM

CP&Y INC.
TEXAS REGISTERED ENGINEERING FIRM
TBPE F-1741

STATE OF TEXAS
BRADLEY KROLL
110044
LICENSED
PROFESSIONAL ENGINEER
12-12-22

NO.	REVISION	BY	DATE

VERIFY SCALE 0 1"
BAR LENGTH EQUALS ONE INCH ON ORIGINAL DRAWING. VERIFY LENGTH ON THIS SHEET AND ADJUST SCALE ACCORDINGLY.

CITY OF WACO
SOUTH 11TH STREET IMPROVEMENTS

DESIGN: 2246
DRAWN: AH
REVIEW: BK
CP&Y:
CLIENT:

SHEET
E1.1

single phase panel blank.xls

PANELBOARD NO: A

SECTION: 1 OF 1
MOUNTING: SURFACE
POLES: 12
LOCATION: ELECT. CLOSET

VOLTAGE: 240/120
PHASE: 1
WIRE: 3
GROUND BUS: YES
200% NEUTRAL: NO

ENGINEER: Brad Kroll P.E.
BUS: 200
MAIN: 200 M.C.B
INTERRUPTING RATING:
ELECTRONIC GRADE PANEL: NO
ISOLATED GROUND BUS: NO

CKT NO.	DESCRIPTION	LOAD (VA) LTS	REC	MECH	MISC	CIRCUIT BREAKER AMPS	POLES			CIRCUIT BREAKER AMPS	POLES	LOAD (VA) LTS	REC	MECH	MISC	DESCRIPTION	CKT NO
1	MAIN BREAKER					60	2	A		20	1						2
3									B	20	1						4
5	LIGHTING CONTROL	500				20	1	A		20	1						6
7	EQUIPMENT RECP.		180			20	1		B	20	1						8
9	LIGHTING	975				20	1	A		20	1						10
11	IRRIGATION		500			20	1		B	20	1						12

PANELBOARD NO: A

Note: * Indicates circuit breaker shall be GFCI

NOTE 1: PROVIDE 'LOCK ON' DEVICE FOR C.B.

SUBTOTAL CONNECTED KVA	1.5	0.7	0.0	0.0	0.0	0.0	0.0	0.0	SUBTOTAL CONNECTED KVA
					1.5	0.7	0.0	0.0	TOTAL CONNECTED KVA

PHASE BALANCE

	LTS	REC	MECH	MISC	TOTAL	% DIF
PHASE A CONNECTED KVA	1.5	0.0	0.0	0.0	1.5	105.3
PHASE B CONNECTED KVA	0.0	0.7	0.0	0.0	0.7	-5.3
AVERAGE PHASE CONNECTED KVA					0.7	

LOAD SUMMARY & FEEDER CALCULATION

LTS	REC	MECH	MISC	SUBTOT	SPARE	TOTAL	
1.5	0.7	0.0	0.0	2.2	0		CONNECTED KVA
1.0	#1	1.0	1.0		%		DEMAND FACTOR
1.5	0.7	0.0	0.0	2.2	0.0	2.2	DEMAND KVA
						9.0	DEMAND AMPS
1.25	1.0	1.0	1.0		1.0		CONTINUOUS / NON-CONTINUOUS FACTOR
						0.80	ADJUSTMENT FACTOR
						1.00	CORRECTION FACTOR (OTHER THAN 30 DEG C)
						10.5	MIN. OVERCURRENT DEVICE AMPS
						10.5	MIN. COND. AMPS PER TERMINATION RATING
						11.2	MIN. COND. AMPS PER INSULATION RATING

LIGHT FIXTURE TYPE "A"

Submitted by HOSSLEY LPS — HOSSLEY LIGHTING AND POWER SOLUTIONS
Job Name: Catalog Number: Notes: Type: 3.29 NTX21-222825

A850-VCOB OLD TOWN SERIES

LED

EPA 1.21 (ft²) | 7 YEAR WARRANTY | WEIGHT 26 LBS | LUMEN RANGE 4,000 to 8,200 | LIFE SPAN L70 MINIMUM 100,000 HOURS | UL LISTED | CLICK FOR FAQ's | DLC

JOB NAME
FIXTURE TYPE
MEMO

BUILD A PART NUMBER

ORDERING EXAMPLE: 2A-A850-SP-VCOB-4L40TS-MDL05-A-PEC-FHD/480PM/4212FP4-188/FCC/BKT

Mounting Config	Fixture	Filter	LED	CCT	Type	Driver	Lens	Options Control Receptacle	Options Control	Options Fuse	Option Decorative Ring	Option SPI	Option Terminal Block	Option Wave Side Shield	Arm Screws	Pole Screw Adapter	Arm Adapter	Finish
PT	A850-SP	F3	VCOB-4L	30	TS	MDL05	A									4212		PGT

Mounting Configuration
(Click here for mounting configuration specifications page)
• 1W • 2A • 3A90 • 1AM
• 1WT • 2AW • 3APT • 2AM
• 1AT • 2APT • 4A • 4SQ/PD
• 1AMT • 3A • 4APT

W = Wall Mount, PT = Post Top, A = Arm Mount, AM = Arm Mid-Mount, PD = Pier Base

Fixture NF = NO TOP FINIAL
• A850P
• A850R

Filter
• CR • 99P • 99S* • OL3
• CL • 99Z • 180A • OL4
• 99A • 99R • 180S • 58B
• 99M • 99W • 180T • C209P
• 99W • 99W • 180T • C209P

* Add "T" after filter designation for optional "Twist-Lock" filter.
F Consult factory for use on concrete poles.

LED
• VCOB-4L

CCT - Color Temperature (K)
• 27(30) • 30(00) • 40(00) • 50(00)

Type
• TS (Symmetric) • TA (Asymmetric)

Driver
• MDL02 (220V-277V, 250mA)
• MDL03 (220V-277V, 350mA)
• MDL05 (220V-277V, 500mA)
• MDH02 (347V-480V, 250mA)
• MDH03 (347V-480V, 350mA)
• MDH05 (347V-480V, 500mA)

Lens
• A (Frosted Acrylic)
• V (Vitreous Poly)
• WA (White Textured Acrylic)
• WP (White Textured Poly)

Options (Click here to view accessories sheet)
• EP 3-Pin control receptacle only
• R5* 5-Pin control receptacle only
• R7* 7-Pin control receptacle only
• PE* Twist-Lock Photocontrol (120v-277v)
• PE3* Twist-Lock Photocontrol (347v)
• PE4* Twist-Lock Photocontrol (480v)
• SC* Shorting Cap
• PEC Electronic Button Photocontrol (120v-277v)
• PEC4 Electronic Button Photocontrol (480v)
• FHD* Double Fuse and Holder
• CDR Cast Decorative Ring
• CDRCL* Cast Decorative Ring with Custom Logo
• PDRD* Perforated Brass Decorative Ring
• GFI* 15A Duplex GFI for Utility Filter
• TB* Terminal Block
• WSS* 120° House Side Shield

* For 900 series utility filter only.
F Requires consult receptacle.
Not all options available on lens.
* Consult factory for specification details.
F Standard in polished, for painted ring specify PRDB-P.
* For use with "TA" distribution type only.

Arm (Click here to view arm specification page)
See Arms & Wall Brackets specification sheets.
• 50 • 70 • 480 • 6036 • TA • 8A
• 42B • 80 • 55 • S79 • TASCR

Pole (Click here to view pole specification page)
See Pole specification sheets.

Finish (Click here to view paint finish sheet)
Standard Finishes*
• BKT Black Textured
• WHT White Textured
• PGT Park Green Textured
• ABT Architectural Medium Bronze Textured
• DBT Dark Bronze Textured
*Smooth finishes are available upon request
Custom Finishes†
• OI Old Iron
• RT Rust
• WBR Weathered Brown
• CD Cedar
• WBK Weathered Black
• TT Two Tone
†Custom colors require upcharge.
Sternberg Select Finishes
• VG Verde Green
• SI Swedish Iron
• OWGT Old World Gray Textured

Specifications

Fixture
The fixture shall be 16" in diameter and 38-1/2" tall. It will be made of vandal resistant clear textured polycarbonate or dent resistant (DR) clear textured acrylic. White textured is also available. The fixture is available in a solid roof (A850SR) for added distinction. The solid roof will be made of 6pun aluminum and securely affixed to the top of the acorn. The optional perforated brass decorative ring (PDRD) is available in polished brass or painted finish. The 2-1/4" wide brass filigree allowing light transfer through decorative openings. The optional CDR is a heavy cast aluminum ring with four cast medallions finished in accent gold. Also available are custom medallions that can be specified with a name, initial or logo. The Luminaire shall be UL listed in US and Canada.

Filter - Standard
The fitter shall be heavy wall cast aluminum, 356 alloy for high tensile strength. It shall have an 8-1/2" inside diameter opening to attach to the 8" neck of the acorn globe. When ordered with a Sternberg aluminum pole, the fitter shall be welded to the pole top or tenon for safety and to ensure the fixture will be plumb, secure and level over the life of the installation. The fitter shall have a one-piece ring bug gasket to resist insect penetration into lamp assembly.

900 Series Utility Fitter Option
The fitter shall be heavy wall cast aluminum, 360 die cast alloy for high tensile strength. It shall have a 9- 1/4" inside diameter opening to attach to the 8" neck of the acorn globe. It shall have a hinged, tool-less entry door that provides open access to all of the components. The 990 shall have an optional terminal block for ease of wiring. An optional Twist-Lock Photocell receptacle, an optional single GFCI outlet for auxiliary power needs. The top mounted driver mounting plate shall be cast aluminum and provide tool-less removal from the housing using 2 finger latches. When ordered with a Sternberg aluminum pole, the fitter shall

See next page

SternbergLighting
ESTABLISHED 1923 / EMPLOYEE OWNED
800-621-3376
555 Lawrence Ave., Roselle, IL 60172
info@sternberglighting.com
www.sternberglighting.com

Submitted by HOSSLEY LPS — HOSSLEY LIGHTING AND POWER SOLUTIONS
Job Name: Catalog Number: Notes: Type: 3.29 NTX21-222825

A850-VCOB OLD TOWN SERIES

LED

fixture set screwed to the pole top or tenon. The fitter shall have a one-piece ring bug gasket to resist insect penetration into lamp assembly. When supplied with GFI receptacle a hole will be provided for cord and plug installation with the access door closed. When cord and plug is not in use a filter plug will be provided and shall be tethered to the fitter for easy recovery and installation.

Twist-Lock Fitter (Optional)
The TL (Twist-Lock) fitter shall have an aluminum die-cast twist-lock mechanism. The tool-less TL arm action allows for easy globe removal and replacement. A die-cast ring assembly is mechanically attached to the globe and is removable if the globe is broken or replaced.

LED's
The luminaire shall use high output, high brightness LED's, consisting of a two piece assembly complete with Chip on Board (COB) LED component and COB holder frame mounted to vertical heat sinks. The LED's and printed circuit boards shall be 100% recyclable; they shall also be protected from moisture and corrosion by a conformal coating. They shall not contain lead, mercury or any other hazardous substances and shall be RoHS-compliant. The LED life rating data shall be determined in accordance with IESNA LM-80. The High Performance white LED's will have a life expectancy of approximately 100,000 hours with not less than 70% of original brightness (lumen maintenance), rated at 25°C. The High Brightness, High Output LED's shall be 4000K (2700K, 3000K or 5000K options) color temperature with a minimum CRI of 70. Consult factory for custom color CCT. The luminaire shall have a minimum _____ (see table) delivered initial lumens rating when operated at steady state with an average ambient temperature of 25°C (77°F).

Optics
The luminaire shall be provided with individual, molded silicone refractor type optics applied to each COB (Chip On Board) LED assembly. The optic shall be at least 92% efficient while providing superior thermal, UV and impact resistance for the COB assembly. The optic helps efficiently shape and distribute the light while minimizing up-light. The luminaire shall provide Symmetric and Asymmetric light distribution. Testing shall be done in accordance with IESNA LM-79.

Electronic Drivers
The LED driver shall be UL Recognized, shall be factory installed inside the fixture for optimized performance and longevity. It shall be supplied with a quick-disconnect electrical connector on the power supply, providing easy power connections and fixture installation. It shall have overload, overheat and short circuit protection, and have a DC voltage output, constant current design, 50/60HZ. It shall be supplied with line-ground, line-neutral and neutral-ground electrical surge protection in accordance with IEEE/ANSI C62.41.2 guidelines. It shall be a high efficiency driver with a THD less than 20% and a high power factor greater than .9. It shall be dimming capable using a 0-10v signal, consult factory for more information.

Photocontrols
Button Style: The photocontrol shall be mounted on the fixture and pre-wired to driver. The electronic button type photocontrol is instant on with a 5-40 second turn off, and shall turn on at 1.5 footcandles with a turn off at 2-3 footcandles. Photocontrol is 120-277 volt and warranted for 6 years. See pole spec sheet for pole mounted version.
Twist-Lock Style: The photocontrol shall be mounted in the utility fitter and pre-wired to driver. The twist lock type photocontrol is instant on with a 3-6 second turn off, and shall turn on at 1.5 footcandles with a turn off at 2-3 footcandles. Photocontrol is 120-277 volt and warranted for 6 years.

Warranty
Seven-year limited warranty. See product and finish warranty guide for details.

Finish
Refer to website for details.

Performance

LIGHT SOURCE	TS LUMENS	TS EFFICACY (LPW)	TA LUMENS	TA EFFICACY (LPW)	WATTAGE
4L40T_MDL03	7980	106.4	8080	108.3	75
4L30T_MDL03	7750	103.3	7840	104.5	75
4L27T_MDL03	7025	93.7	7220	96.3	75
4L40T_MDL03	6245	111.5	6440	115.0	56
4L30T_MDL03	6090	108.8	6205	111.3	56
4L27T_MDL03	5560	99.2	5670	101.3	56
4L40T_MDL02	4610	115.3	4755	118.9	40
4L30T_MDL02	4445	111.6	4605	115.1	40
4L27T_MDL02	4000	101.5	4185	104.8	40

SternbergLighting
ESTABLISHED 1923 / EMPLOYEE OWNED
800-621-3376
555 Lawrence Ave., Roselle, IL 60172
info@sternberglighting.com
www.sternberglighting.com

Submitted by HOSSLEY LPS — HOSSLEY LIGHTING AND POWER SOLUTIONS
Job Name: Catalog Number: Notes: Type: 3.29 NTX21-222825

A850-VCOB OLD TOWN SERIES

LED

Fixtures

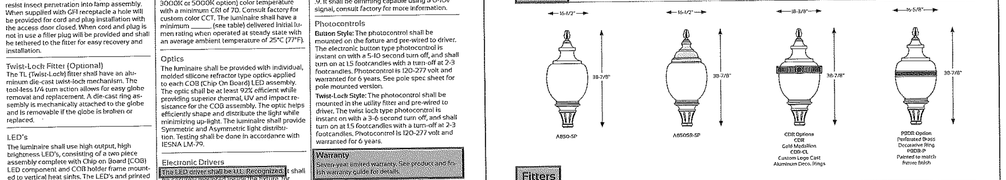

Filters

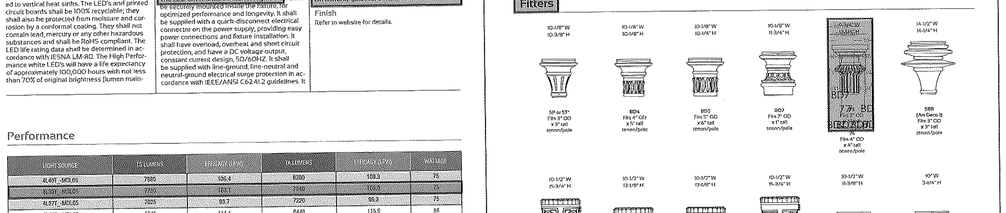

SternbergLighting
ESTABLISHED 1923 / EMPLOYEE OWNED
800-621-3376
555 Lawrence Ave., Roselle, IL 60172
info@sternberglighting.com
www.sternberglighting.com

Submitted by HOSSLEY LPS — HOSSLEY LIGHTING AND POWER SOLUTIONS
Job Name: Catalog Number: Notes: Type: 3.29 NTX21-222825

4200 AUGUSTA SERIES

ORNAMENTAL POLE

DIMENSIONS 10-3/4" Ø 19' TAL | 5 YEAR WARRANTY | UL LISTED | ETL LISTED | CLICK FOR FAQ's

JOB NAME
FIXTURE TYPE
MEMO

BUILD A PART NUMBER

ORDERING EXAMPLE: 4214FP4-188-BCC-GFILPIUC-SH/BKT

Base Model	Height	Shaft	Wall Thickness	Post Center Cap	Option Bushel	Options Photocell	Option Circuit Fault Breaker	Option Flag Pole Holder	Option Banner Arms	Option Planter Arms	Option Sign Arms	Option Speaker Hub	Option Sign Bracket	Option Steel Wreath Hook	Finish
42	14	TFPG	0.250												PGT

Base Model
• 42

Height (in feet)
• 8 • 9 • 10 • 12 • 14 • 16 • 18

Shaft
• T4: 4"- 3" Tapered Smooth
• TS: 5"- 3" Tapered Smooth
• TS4: 5"- 4" Tapered Smooth
• PS: 4" Straight Smooth
• PS: 5" Straight Smooth
• FP4: 4" Straight Fluted
• FP5: 5" Straight Fluted
• TFPG: 5"- 3" Cast Tapered Fluted

*Not available in 250 wall
†Not available in 10' wall
*Heights finished in 9'0", 10'7", 12'2", 14'2"

Wall Thickness
• .125: 1/8" Wall Thickness
• .188: 3/16" Wall Thickness
• .250: 1/4" Wall Thickness
• 0.25 Cast Tapered Wall Thickness • .500

*For cast "TFPG" shafts only

Post Center Cap (if required)
(Click here to view post cap sheet)
• BCC • FCC • SCC • TFCC
• SSCC • ISCC • PCC

Options (Click here to view accessories sheet)
• DB4 Direct Burial mounting style pole, with 4' direct burial section (or advise other length)
• HXB Hella Base mounting style pole
• PCD Electronic Button Photocontrol, mounted on an access door (120v-277v)
• PCD4 Electronic Button Photocontrol, mounted on an access door (480v)
• GFI IUC 15 Amp duplex GFCI receptacles with a stainless in-use cover
• GFI LPIUC 15 Amp duplex GFCI receptacles with a low-profile in-use cover
• GFI III 15 Amp duplex GFCI receptacle installed in pole base, includes mouse hole on access door for wire access
• GFB Remote Ground Fault Breaker installed in pole base (for use with NON-GFCI receptacles)
• FH Cast Aluminum flag holder mount, for use with 1' diameter flag pole
• SDA Single Banner Arm, "PM" style mount
• DBA Double Banner Arms, "PM" style mount
• SBMT Single Banner Arm and filing, for triangle banners, "PM" style mount
• HSBA Single Banner Arm, HUB mount style mount
• HDBA Double Banner Arms, HUB mount style mount
• BDBA6 Double Banner Arms, Break-Away style, to break with 60MPH wind gust
• BDBA9 Double Banner Arms, Break-Away style, to break with 90MPH wind gust
• CASBA Single Banner Arm, Clamp-Style mount, for 4" diameter poles
• CSSBA Single Banner Arm, Clamp-Style mount, for 5" diameter poles
• CADBA Double Banner Arms at 180°, Clamp-Style mount, for 4" diameter poles
• CSDBA Double Banner Arms at 180°, Clamp-Style mount, for 5" diameter poles
• DHPA Double Hooked Planter Arm
• SHPA Single Hooked Planter Arm
• DSPA Double Stepped Planter Arm
• SSPA Single Stepped Planter Arm
• PMAP6 Cast aluminum decorative planter arm
• SA7B Small cast aluminum decorative sign arm, with 24" long channel for double sign by others
• SA4TB Large cast aluminum decorative sign arm, with 24" long channel for blade sign by others
• SABA Banner arm style sign arm, with 24" long channel for blade sign by others
• SH Female threaded speaker hub, advise thread size
• SB Sign Bracket, vertically mounted on pole shaft
• WHK Steel wreath hook

Finish (Click here to view paint finish sheet)
Standard Finishes*
• BKT Black Textured
• WHT White Textured
• PGT Park Green Textured
• ABT Architectural Medium Bronze Textured
• DBT Dark Bronze Textured
*Smooth finishes are available upon request.
Custom Finishes†
• CM Custom Match
• OI Old Iron
• RT Rust
• WBR Weathered Brown
• CD Cedar
• WBK Weathered Black
• TT Two Tone
†Custom colors require upcharge.
Sternberg Select Finishes
• VG Verde Green
• SI Swedish Iron
• OWGT Old World Gray Textured

SternbergLighting
ESTABLISHED 1923 / EMPLOYEE OWNED
800-621-3376
555 Lawrence Ave., Roselle, IL 60172
info@sternberglighting.com
www.sternberglighting.com

CP&Y, INC.
TEXAS REGISTERED ENGINEERING FIRM
TBPE F-1741

STATE OF TEXAS
BRAD E. KROLL
110044
LICENSED
PROFESSIONAL ENGINEER
12-12-22

NO.	REVISION	BY	DATE

VERIFY SCALE 0 1"
BAR LENGTH EQUALS ONE INCH ON ORIGINAL DRAWING. VERIFY LENGTH ON THIS SHEET AND ADJUST SCALE ACCORDINGLY.

CITY OF WACO
SOUTH 11TH STREET IMPROVEMENTS

DESIGN:	2246
DRAWN:	AH
REVIEW:	BK
CP&Y:	
CLIENT:	

SHEET
E1.2

TRILOGY ENGINEERING
ELECTRICAL PLUMBING MECHANICAL
TBPE # F-14307
WWW.TRILOGYENG.COM

ANTIQUE/SHOEBOX LIGHT & ASSOC. ITEMS SPECS. (LED)

1.0 LIGHTING POLES AND FIXTURES:
THE LIGHTING POLES FURNISHED FOR MOUNTING LUMINARIES SHALL BE FREE FROM IMPERFECTIONS AND PRESENT A PLEASING APPEARANCE WHEN PLUMBED AND SECURED TO THE FOUNDATION. THE FINISHED POLE SHALL HAVE A SMOOTH UNIFORM FINISH FREE FROM PITS, SCRATCHES, BLISTERS OR OTHER DEFECTS. EACH SHOE BOX STYLE POLE SHALL HAVE A REMOVABLE POLE CAP. THE MOUNTING HEIGHT SHALL BE AS SPECIFIED PER POLE TYPE. ALL FIXTURES SHALL NOT REQUIRE INDIVIDUAL PHOTOCELLS OR PHOTOCELL SOCKETS. ALL POLES SHALL NOT HAVE FACTORY INSTALLED FUSE HOLDERS, BUT SHALL HAVE EXTERNAL FUSE HOLDERS INSTALLED AT THE BASE OF EACH POLE. ALL ANTIQUE LIGHT POLES AND FIXTURES SHALL HAVE A POWDER COAT PAINT FINISH.

ANTIQUE DECORATIVE POLE AND FIXTURE
THE ANTIQUE LIGHT POLE AND FIXTURE MANUFACTURE AND PART NUMBER:

MANUFACTURE:	ANTIQUE STREET LIGHTING CO.
POLE PART NUMBER:	#PI C17 14A DGRH
FIXTURE PART NUMBER:	#A25 W INC MOG ACT 120 DGRH
COLOR CODE:	POWDER COAT PAINT COLOR DGRH = # RAL 6012 (BLACK GREEN)
LAMP:	PRUF 35W (#211-03) (120-277 V) DAY WHITE

SHOE BOX TYPE AREA LIGHTING POLE AND FIXTURE (PARKING LOTS ONLY)
THE SHOE BOX TYPE LIGHT POLE AND FIXTURE MANUFACTURE PART NUMBER:

COLOR CODE:	POWDER COAT PAINT COLOR # RAL 8019 (BLACK GREEN)
POLE MANUFACTURE:	KW POLE OR APPROVAL EQUAL
POLE PART NUMBER:	SINGLE FIXTURE #SSP30-6.0-7-BRZ DM10 WITH 2 IN. X 12 IN. HORIZONTAL PIPE TENON MOUNT
FIXTURE MANUFACTURE:	DURALIGHT OR APPROVED EQUAL*
FIXTURE PART NUMBER:	# JXM-ST110 - LED COBRA HEAD, 120-277 VOLT # JXM-ST110 - LED COBRA HEAD, 480 VOLT

* FIXTURES MUST HAVE BEEN OR BE SUBMITTED TO CITY OF WACO FOR INFIELD TESTING. TESTED AND APPROVED LIGHTS LISTED IN SECTION 1.1.
** ORIGINAL TESTED FIXTURES WERE LED ILLUMINATION 150W, 225W, CURRENT EQUIVALENT.

1.1 TESTED AND APPROVED LED FIXTURES:

250W EQUIVALENT:	400W EQUIVALENT:
EOI 150W (#ESL-02A011S15065A)	DURALIGHT 180W (#JXM-ST180)
PRUF 112W (#230-01)**	PRUF 168W (#240-01)**
LEOTEK 105W (#SL-250WLM3-FX)	LEOTEK 166W (#SL-400WLM3-FX)
	PHILLIPS HADCO EVOLAIRE 130W #WL130N)

2.0 ANCHOR BOLTS:
FOUR HIGH STRENGTH 1 IN. STEEL ANCHOR BOLTS SHALL BE FURNISHED WITH EACH POLE. ANCHOR BOLTS SHALL BE FABRICATED FROM A GOOD COMMERCIAL QUALITY HOT ROLLED CARBON STEEL BAR WITH MINIMUM YIELD STRENGTH OF 50,000 PSI. EACH ANCHOR BOLT SHALL BE THREADED AT THE TOP AND FITTED WITH DOUBLE NUTS AND WASHERS. THE OTHER END OF THE BOLT SHALL HAVE AN "L" BEND. THE ANCHOR BOLTS SHALL BE OF SUFFICIENT LENGTH AND DIAMETER TO DEVELOP THE FULL STRENGTH OF THE SHAFT. THE THREADED END OF THE BOLT SHALL BE GALVANIZED A MINIMUM LENGTH OF 8 IN. FROM THE THREADED END WITH A MINIMUM THREADED LENGTH OF 6 IN. ALL NECESSARY ANCHOR BOLTS AND TEMPLATES FOR SETTING ANCHOR BOLTS SHALL BE FURNISHED IMMEDIATELY AFTER AWARD OF THE CONTRACT, REGARDLESS OF DELIVERY SCHEDULES OF THE POLES. ADDITIONAL HARDWARE SHALL BE PROVIDED AND MAY BE DELIVERED WITH THE POLES.

WACO | ENGINEERING DIVISION | REVISIONS: NO. | COMMENTS | BY | DATE; ## | DESCRIPTION | FL | MM/DD/YYYY | DATE 07/01/2022 | T-2A

ANTIQUE/SHOEBOX LIGHT & ASSOC. ITEMS SPECS. (LED)

3.0 PHOTOELECTRIC CONTROL:
THE PHOTOELECTRIC CELLS SHALL BE TWIST PLUG IN TYPE PRECISION BRAND TO MATCH FIXTURE OR CONTACTOR VOLTAGE.

4.0 ELECTRICAL SERVICE EQUIPMENT:
ELECTRICAL SERVICE EQUIPMENT SHALL INCLUDE, BUT NOT BE LIMITED TO; METERED SERVICE/DISCONNECT OR CONTACTOR ENCLOSURE. ALL ENCLOSURES HOUSING ELECTRICAL EQUIPMENT SHALL BE RAIN-TIGHT, INCLUDE A PADLOCK HANDLE, AND DESIGNED FOR OUTDOOR INSTALLATION IN ACCORDANCE WITH NEMA STANDARDS. THE LIGHTING INSTALLATIONS SHALL COMPLY WITH THE APPLICABLE PROVISIONS OF THE NATIONAL ELECTRICAL SAFETY CODE AND NATIONAL ELECTRIC MANUFACTURERS ASSOCIATION SPECIFICATIONS. A STANDALONE, PEDESTAL TYPE COMBINATION METERED SERVICE/DISCONNECT/CONTACTOR CONTROL PANEL SHALL BE USED. THE PEDESTAL TYPE METER SERVICE MAY BE MOUNTED TO A CONCRETE PAD, ALTHOUGH A PRE CAST POLYMER PAD BASE IS RECOMMENDED. POWER REQUIREMENTS DESIRED SHOULD BE 120/240V OR 208/120V SINGLE PHASE. IF NOT AVAILABLE, AN OPTIONAL SERVICE VOLTAGE MAY BE ACCEPTABLE IF APPROVED BY CITY STAFF. EACH SERVICE POINT SHALL INCLUDE INDIVIDUAL CIRCUIT BREAKERS AND PHOTOCELL CONTROLLED CONTACTOR(S), AND A HOA SWITCH FOR CONTROL OF THE LIGHTING CIRCUIT(S). METER SERVICES SHALL REQUIRE A NO FEE ELECTRICAL PERMIT AND BE INSPECTED BY CITY OF WACO INSPECTION SERVICES. ELECTRIC METER APPLICATION FOR SERVICE WILL BE MADE BY CITY STAFF. THE COLOR OF THE ELECTRICAL SERVICE EQUIPMENT SHALL BE MANUFACTURES STANDARD LIGHT OR MINT GREEN.

RECOMMENDED, ONCOR APPROVED, SERVICE PEDESTALS ARE MILBANK BRAND.

5.0 WIRE:
ALL ELECTRICAL WIRE SHALL BE STRANDED COPPER CONDUCTOR. EARTH GROUND SHALL BE STRANDED COPPER CONDUCTOR WITH GREEN INSULATION. ALL WIRE SHALL BE OF ADEQUATE SIZE TO ACCOMMODATE LIGHTING LOAD. ALL SPLICES SHALL BE MADE INSIDE THE POLE. MINIMUM CONDUCTOR SIZE SHALL BE 10 AWG.

6.0 CONCRETE:
SEE STANDARD DETAIL G-7 GENERAL CONCRETE AND REINFORCEMENT NOTES.

7.0 FOUNDATION BASE
ALL FOUNDATION BASES SHALL BE (24) TWENTY-FOUR INCHES IN DIAMETER. TOP OF BASES SHALL EXTEND (6) SIX INCHES ABOVE GRADE. TOP OF FOUNDATION SHALL HAVE A 1 IN. CHAMFER. STEEL REBAR SHALL BE USED TO FOR CONCRETE REINFORCEMENT THROUGHOUT THE ENTIRE BASE. ALL FOUNDATIONS SHALL HAVE A MINIMUM OF TWO 2 IN. PVC CONDUITS INSTALLED. FOUNDATION SHALL BE POSITIONED WITH OUTSIDE EDGE A MINIMUM OF 2 FT. FROM BACK OF CURB.

- FOR AREA LIGHTING POLES IN EXCESS OF (18) EIGHTEEN FEET IN HEIGHT, BASES SHALL EXTEND A MINIMUM OF (6) SIX FEET BELOW GRADE.
- FOR DECORATIVE POLES NOT TO EXCEED (18) EIGHTEEN FEET, BASES SHALL EXTEND A MINIMUM OF (3) THREE FEET BELOW GRADE.

EXCEPTION: FOR PARKING LOT INSTALLATIONS, ALL BASES SHALL BE (30) THIRTY INCHES IN DIAMETER AND EXTEND A MINIMUM OF (36) THIRTY-SIX INCHES ABOVE GRADE. BELOW GRADE SPECIFICATIONS SHALL REMAIN AS STATED ABOVE.

DISCLAIMER: THE USE OF THIS STANDARD IS GOVERNED BY THE "TEXAS ENGINEERING PRACTICE ACT". NO WARRANTY OF ANY KIND IS MADE BY THE CITY OF WACO FOR ANY PURPOSE WHATSOEVER. THE CITY OF WACO ASSUMES NO RESPONSIBILITY FOR THE CONVERSION OF THIS STANDARD TO OTHER FORMATS OR FOR INCORRECT RESULTS OR DAMAGES RESULTING FROM ITS USE.

WACO | ENGINEERING DIVISION | REVISIONS: NO. | COMMENTS | BY | DATE; ## | DESCRIPTION | FL | MM/DD/YYYY | DATE 07/01/2022 | T-2B

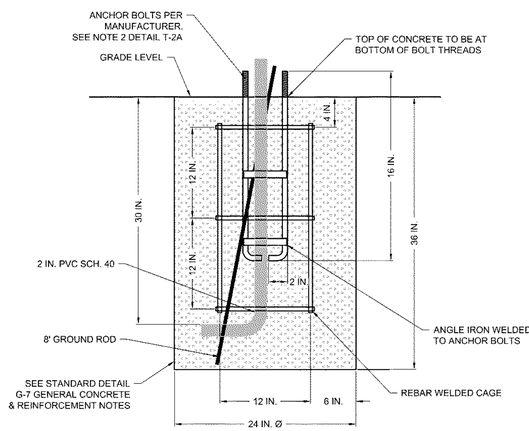

SECTION VIEW

ANTIQUE STREET LIGHT REINFORCED FOUNDATION
(NO SCALE)

DISCLAIMER: THE USE OF THIS STANDARD IS GOVERNED BY THE "TEXAS ENGINEERING PRACTICE ACT". NO WARRANTY OF ANY KIND IS MADE BY THE CITY OF WACO FOR ANY PURPOSE WHATSOEVER. THE CITY OF WACO ASSUMES NO RESPONSIBILITY FOR THE CONVERSION OF THIS STANDARD TO OTHER FORMATS OR FOR INCORRECT RESULTS OR DAMAGES RESULTING FROM ITS USE.

WACO | ENGINEERING DIVISION | REVISIONS: NO. | COMMENTS | BY | DATE; ## | DESCRIPTION | FL | MM/DD/YYYY | DATE 07/01/2022 | T-3

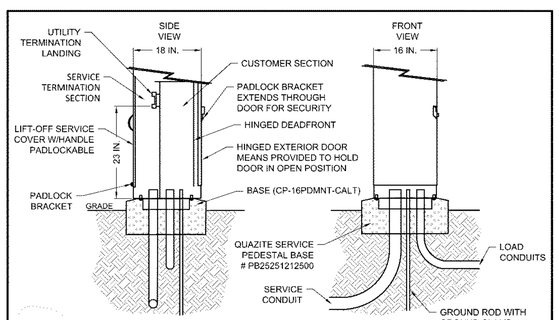

TYPICAL CONSTRUCTION & INSTALLATION DETAILS

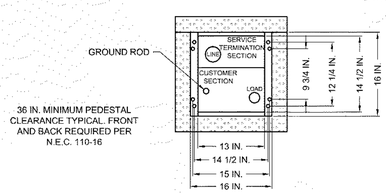

MOUNTING BASE DETAIL TOP VIEW

MILBANK SERVICE PEDESTAL
CP3B IN.ML IN. SERIES
(NO SCALE)

DISCLAIMER: THE USE OF THIS STANDARD IS GOVERNED BY THE "TEXAS ENGINEERING PRACTICE ACT". NO WARRANTY OF ANY KIND IS MADE BY THE CITY OF WACO FOR ANY PURPOSE WHATSOEVER. THE CITY OF WACO ASSUMES NO RESPONSIBILITY FOR THE CONVERSION OF THIS STANDARD TO OTHER FORMATS OR FOR INCORRECT RESULTS OR DAMAGES RESULTING FROM ITS USE.

WACO | ENGINEERING DIVISION | REVISIONS: NO. | COMMENTS | BY | DATE; ## | DESCRIPTION | FL | MM/DD/YYYY | DATE 07/01/2022 | T-5

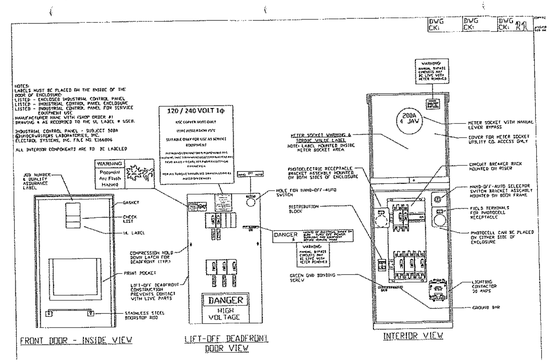

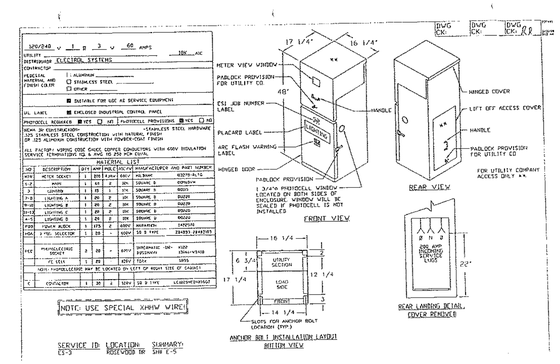

CP&Y, INC.
TEXAS REGISTERED ENGINEERING FIRM
TBPE F-1741

12-12-22

NO.	REVISION	BY	DATE

VERIFY SCALE 0 1"
BAR LENGTH EQUALS ONE INCH ON ORIGINAL DRAWING. VERIFY LENGTH ON THIS SHEET AND ADJUST SCALE ACCORDINGLY.

CITY OF WACO
SOUTH 11TH STREET IMPROVEMENTS

DESIGN:	2246
DRAWN:	AH
REVIEW:	BK
CP&Y:	
CLIENT:	

SHEET
E1.3

TRILOGY ENGINEERING
ELECTRICAL PLUMBING MECHANICAL
TBPE # F-14307
WWW.TRILOGYENG.COM

ELECTRICAL NOTES BY SYMBOL	
E1	EXISTING ELECTIRCAL PULL BOX AND EXISTING CONDUIT
E2	PROVIDE NEW ELECTRICAL PULL BOX AND CONDUIT

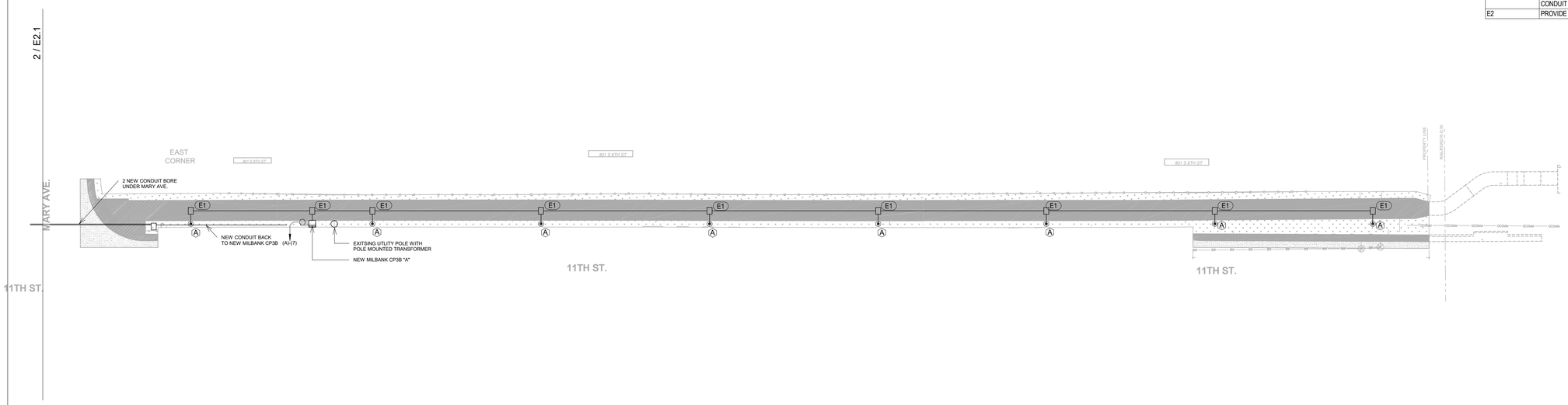

1 POWER FLOOR PLAN - AREA A
N.T.S

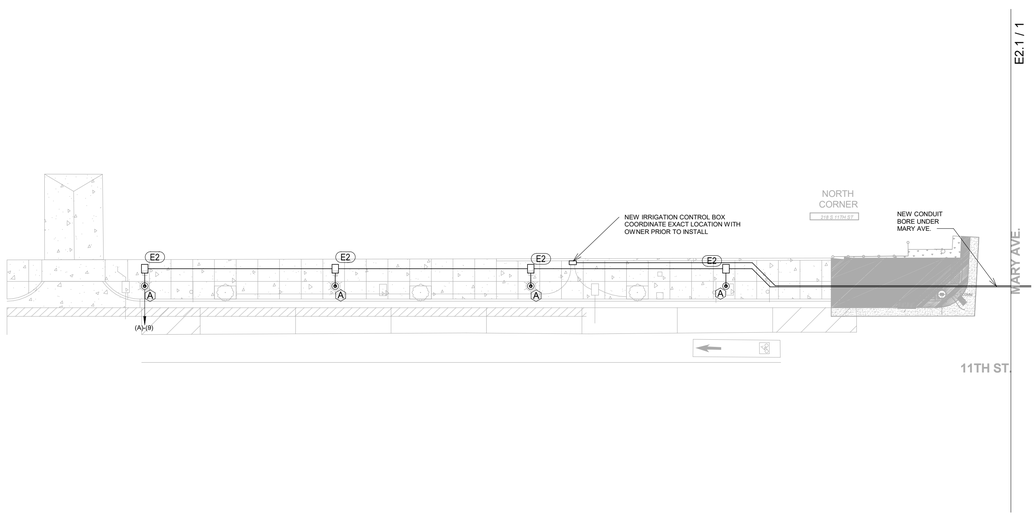

2 POWER FLOOR PLAN - AREA B
N.T.S

CP&Y INC.
TEXAS REGISTERED ENGINEERING FIRM
TBPE F-1741

STATE OF TEXAS
BRADLEY L. KROLL
110044
LICENSED
PROFESSIONAL ENGINEER
12-12-22

NO.	REVISION	BY	DATE

VERIFY SCALE
0 1"
BAR LENGTH EQUALS ONE INCH ON ORIGINAL DRAWING. VERIFY LENGTH ON THIS SHEET AND ADJUST SCALE ACCORDINGLY.

CITY OF WACO
SOUTH 11TH STREET IMPROVEMENTS

DESIGN:	2246
DRAWN:	AH
REVIEW:	BK
CP&Y:	
CLIENT:	

TRILOGY ENGINEERING
ELECTRICAL PLUMBING MECHANICAL
TBPE # F-14307
WWW.TRILOGYENG.COM

SHEET
E2.1

WEBSTER AVE EAST
CURBLINE IMPROVEMENTS

BID PROPOSAL
Webster Ave East Curbline Improvements

Item No.	Description	Estimate Qty	Unit
BASE BID			
GENERAL CONDITIONS			
1	Mobilization, Permits and Project Incidentals (10% Maximum of Total Bid)	1	LS
2	Bonding and Insurance (2.5% Maximum of Total Bid)	1	LS
3	Stormwater Pollution & Prevention Plan	1	LS
4	Stormwater Pollution & Prevention Plan Implementation	1	LS
5	Traffic Control Plan	1	LS
6	Traffic Control Plan Implementation	1	LS
DEMOLITION IMPROVEMENTS			
7	Existing HMAC & Base Material (All Depths, All Types) to be sawcut, removed and disposed off site, including necessary excavation and/or placement of select fill to achieve design subgrade, and all material, labor, equipment and incidentals complete and in place	111	SY
8	Provide variable depth HMAC Milling and disposal offsite, including all HMAC sawcutting, sweeping, dust control, installation of temporary traffic striping, hauling and disposal of millings, and all material, labor, equipment and incidentals complete and in place	277	SY
9	Existing Concrete Curb to be removed and disposed offsite, including necessary saw cutting, removal transportation and disposal and all material, labor, equipment and incidentals complete and in place	480	LF
10	Existing Reinforced Concrete Sidewalk to be removed and disposed offsite, including necessary saw cutting, removal transportation and disposal, necessary excavation and/or placement of select fill to achieve design subgrade, temporary access to businesses, and all material, labor, equipment and incidentals complete and in place	1782	SF
11	Removal of Existing Water Meter Box (All Sizes, All Types) and Disposal Offsite, and all material, labor, equipment, and incidentals complete and in place	1	EA
12	Removal of Existing Water Valve Box (All Sizes, All Types) and Disposal Offsite, and all material, labor, equipment, and incidentals complete and in place	1	EA
13	Existing Irrigation Head to be removed and disposed offsite, including necessary capping of existing lines, and all material, labor, equipment and incidentals complete and in place	1	EA
14	Existing Signage, Pole and Foundation to be removed, including retainage of sign for reinstallation, storage, transportation, disposal fo pole and foundation in offsite location, and palcement of select fill in excavated area, and all material, labor, equipment and incidentals complete and in place	6	EA

BID PROPOSAL
Webster Ave East Curbline Improvements

Item No.	Description	Estimate Qty	Unit
STREET IMPROVEMENTS			
15	Reinforced Concrete Sidewalk, including all necessary subgrade preparation, base material, formwork, reinforcement, concrete, finishing, connection to existing concrete sidewalk, and all material, labor, equipment and incidentals complete and in place	3705	SF
16	Reinforced Concrete Curb & Gutter, incliding all necessary subgrade preparation, portland cement treated base material, formwork, reinforcement, concrete, finishing, connection to existing concrete curb & gutter, and all material, labor, equipment and incidentals complete and in place	462	LF
17	Reinforced Concrete Curb Transition, including all necessary subgrade preparation, portland cement treated base material, formwork, reinforcement, concrete, finishing, connection to existing concrete curb & gutter, and all material, labor, equipment and incidentals complete and in place	20	LF
18	2,000 PSI Unreinforced Concrete Base, including including all surface preparation, installation, and all material, labor, equipment and incidentals complete and in place	2310	SF
19	2" HMAC Type "D" Overlay including application of TRAIL, including all surface preparation, installation, necessary temporary traffic striping, and all material, labor, equipment and incidentals complete and in place	213	SY
20	2" HMAC Type "D" including bonding course, installation, necessary temporary traffic striping, and all material, labor, equipment and incidentals complete and in place	102	SY
21	Installation of Water Valve Box, including all material, labor, equipment and incidentals complete and in place	1	EA
22	Installation of Water Meter Box, including all material, labor, equipment and incidentals complete and in place	1	EA
23	Installation of Water Vault Lid and Hatch, and all material, labor, equipment and incedentals complete and in place	1	LS
24	Installation of Concrete Pad around ring and cover, adjustment to elevation of ring and cover, and all material, labor, equipment and incedentals complete and in place	1	LS
25	Installation of Signage Pole and Foundation, including installation of retained signage, and all material, labor, equipment and incidentals complete and in place	6	EA
26	Installation of Select Fill and Reclaimed of Imported Top Soil, and all material, labor, equipment and incedentals complete and in place	250	SY
27	Installation of Solid Block Sod, including scarifying existing ground, watering as needed, and all material, labor, equipment and incentals complete and in place	250	SY
28	Tree Well, including all necessary subfrade preparation, root barriers, formwork, reinforcement, concrete, finishing, and all material, labor, equipment and incidentals complete and in place	3	EA

CP&Y, INC.
TEXAS REGISTERED ENGINEERING FIRM
TBPE F-1741

STATE OF TEXAS
DAVID L. MAREK
#83327
REGISTERED
PROFESSIONAL ENGINEER
4-14-2023

NO.	REVISION	BY	DATE

VERIFY SCALE 0 1"
BAR LENGTH EQUALS ONE INCH ON ORIGINAL DRAWING. VERIFY LENGTH ON THIS SHEET AND ADJUST SCALE ACCORDINGLY

CITY OF WACO
WEBSTER AVE EAST CURBLINE IMPROVEMENTS

SUMMARY OF QUANTITIES

DESIGN: DLM
DRAWN: ECM
REVIEW: DLM
CP&Y: CWAC 2200983
CLIENT:

SHEET
C400

PRINTED BY: emcdougald DATE: 3/24/2023
FILE PATH: G:\Projects\MSIL2100126 WEBSTER SIDEWALK\DWG\VA CURB DRAWINGS\MSIL2100126-C10-COVER-NOTES.dwg, C400

G:\Projects\MSIL2100126 WEBSTER SIDEWALK\DWG\VA CURB DRAWINGS\MSIL2100126-C10-COVER-NOTES.dwg, C400, 4/12/2023 1:48:51 PM, 1:1

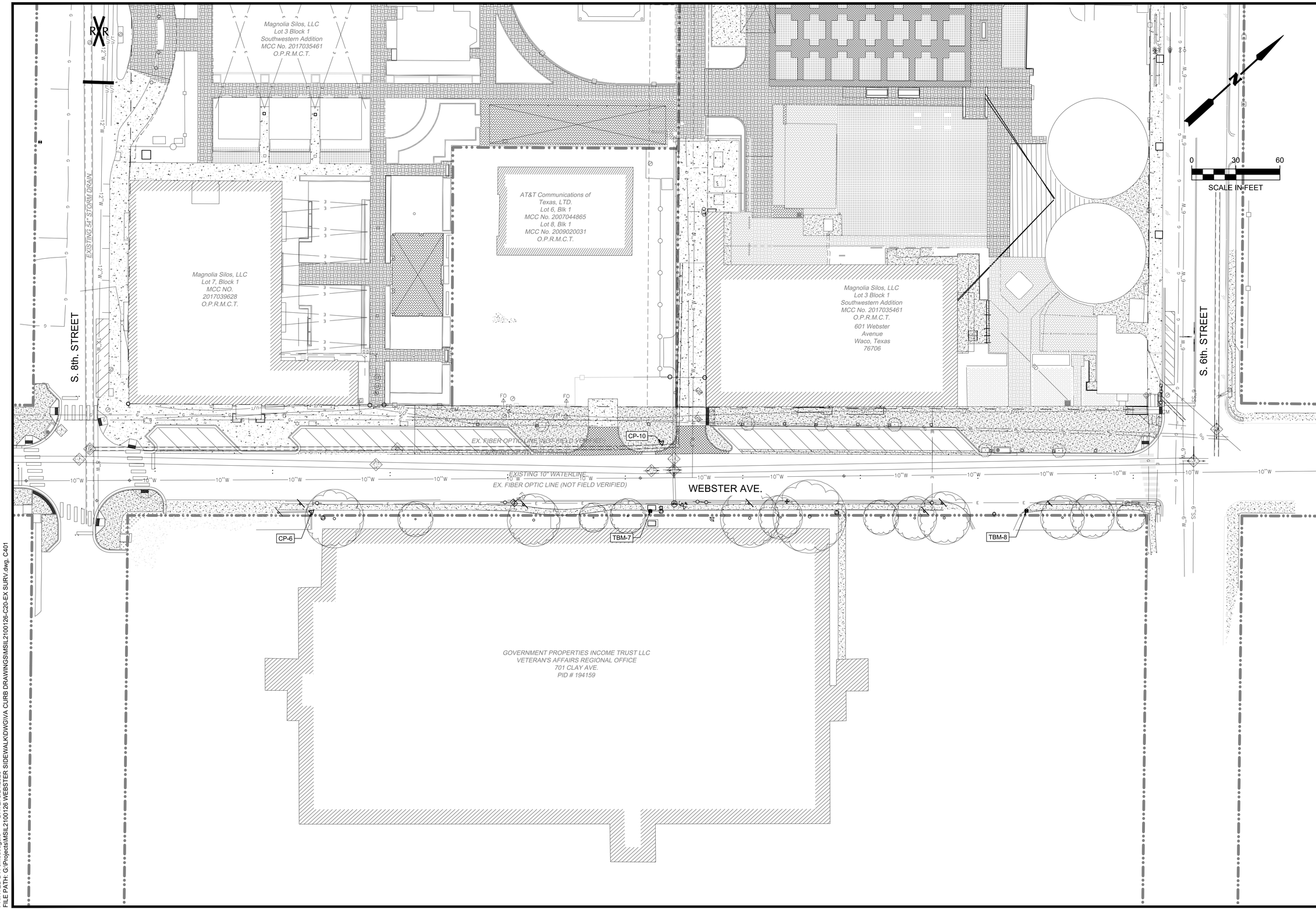

CP&Y, INC.
TEXAS REGISTERED ENGINEERING FIRM
TBPE F-1741

STATE OF TEXAS
DAVID L. MAREK
#83327
REGISTERED
PROFESSIONAL ENGINEER
4-14-2023

NO.	REVISION	BY	DATE

VERIFY SCALE
0 1"

BAR LENGTH EQUALS ONE INCH ON ORIGINAL DRAWING. VERIFY LENGTH ON THIS SHEET AND ADJUST SCALE ACCORDINGLY.

CITY OF WACO
WEBSTER AVE EAST CURBLINE IMPROVEMENTS

EXISTING SURVEY

DESIGN: DLM
DRAWN: ECM
REVIEW: DLM
CP&Y: CWAC 2200983
CLIENT:

SHEET
C401

PRINTED BY: emcdougald DATE: 3/24/2023
FILE PATH: G:\Projects\MSIL2100126 WEBSTER SIDEWALK\DWG\VA CURB DRAWINGS\MSIL2100126-C20-EX SURV.dwg, C401

G:\Projects\MSIL2100126 WEBSTER SIDEWALK\DWG\VA CURB DRAWINGS\MSIL2100126-C20-EX SURV.dwg, C401, 4/12/2023 1:49:09 PM, 1:1

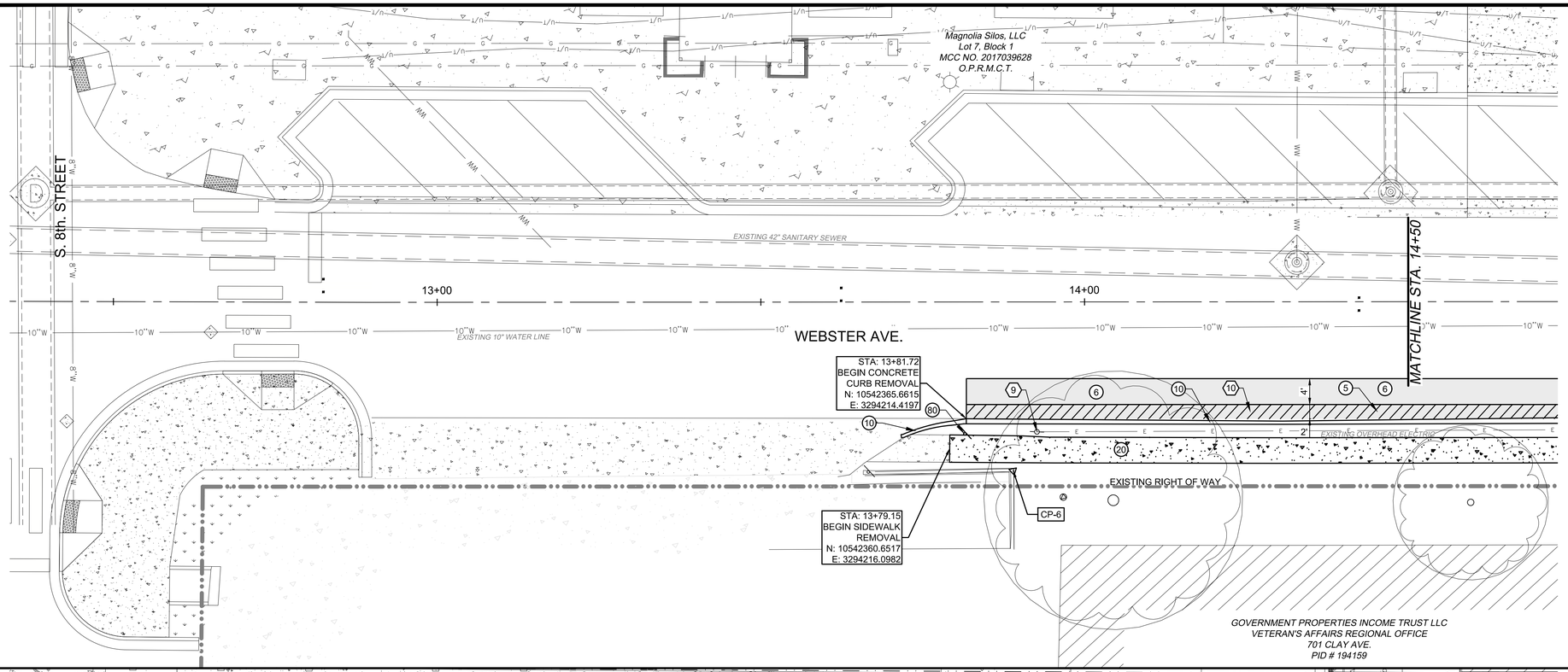

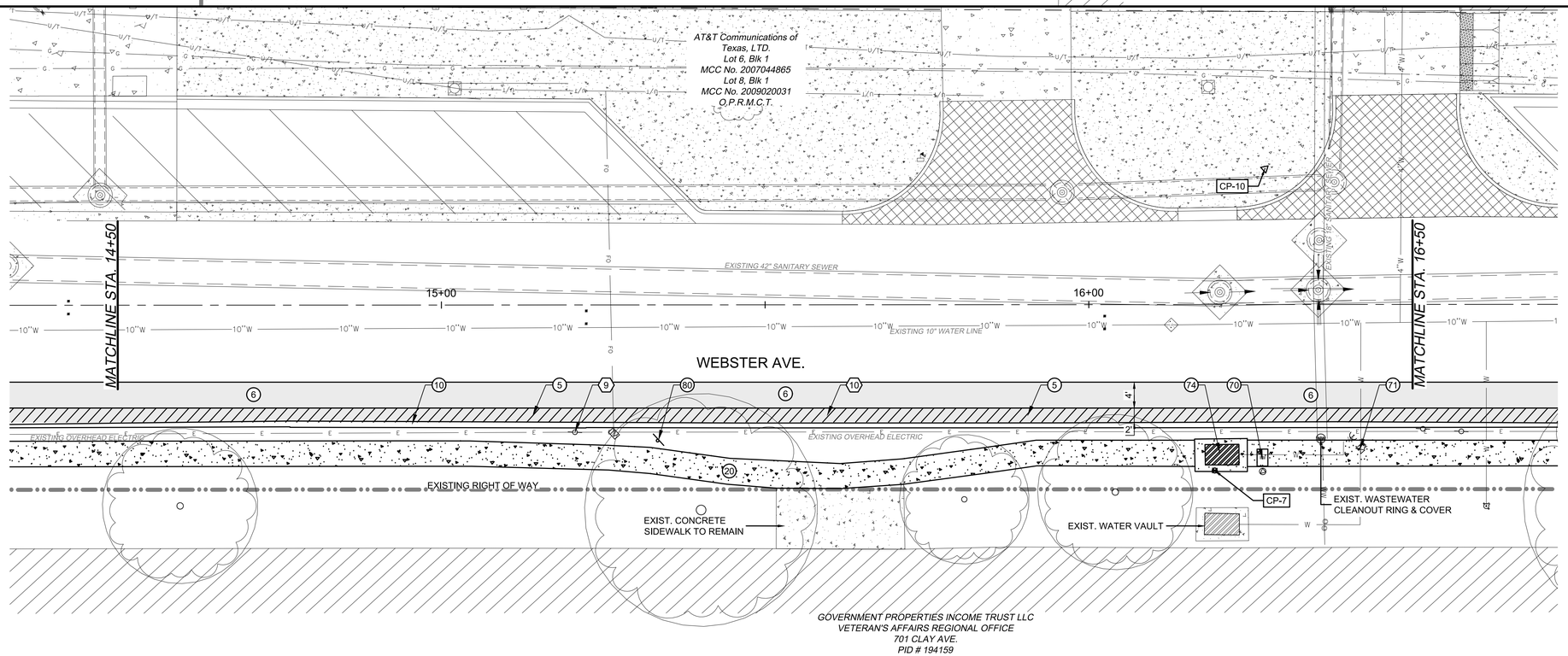

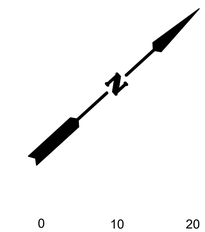

DEMOLITION CALLOUTS

(5) HMAC & BASE (ALL DEPTHS) TO BE SAWCUT, REMOVED, & DISPOSED OFFSITE. CONTRACTOR TO PROVIDE NECESSARY EXCAVATION AND/OR FILL TO OBTAIN DESIGN SUBGRADE. COST TO BE SUBSIDIARY TO BID ITEM

(6) HMAC TO BE MILLED (VARIABLE DEPTH)(SEE CROSS SECTIONS). CONTRACTOR TO DISPOSE OF MILLINGS IN OFFSITE LOCATION

(10) CONCRETE CURB OR CURB & GUTTER (ALL TYPES) TO BE SAWCUT, REMOVED & DISPOSED OFFSITE. CONTRACTOR TO REMOVE HMAC & BASE NECESSARY FOR CURB & GUTTER CONSTRUCTION.

(20) REINFORCED CONCRETE SIDEWALK TO BE SAWCUT, REMOVED & DISPOSED OFFSITE. CONTRACTOR TO PROVIDE NECESSARY EXCAVATION AND/OR PLACEMENT OF SELECT FILL TO OBTAIN DESIGN SUBGRADE. COST SHALL BE SUBSIDIARY TO REMOVAL BID ITEM

(70) EXISTING WATER METER BOX TO BE REMOVED & DISPOSED OFFSITE

(71) EXISTING WATER VALVE BOX TO BE REMOVED & DISPOSED OFFSITE

(74) EXISTING WATER VAULT LID AND HATCH TO BE REMOVED AND DISPOSED OFFSITE IN APPROVED LOCATION

(80) EXISTING SIGN, POLE & FOUNDATION TO BE REMOVED. RETAIN SIGN FOR REINSTALLATION. POLE & FOUNDATION TO BE DISPOSED OFFSITE IN APPROVED LOCATION. INSTALL SELECT FILL IN EXCAVATED VOID. COST OF FILL INSTALLATION TO BE INCIDENTAL TO ITEM OF WORK

SPECIAL PROJECT NOTES

(9) EXISTING POWER POLE TO REMAIN. CONTRACTOR TO NOTIFY POLE OWNER A MINIMUM OF 48 HOURS IN ADVANCE OF CONSTRUCTION

(10) EXISTING CURB CONTAINS GUTTER PAN. CONTRACTOR TO ANTICIPATE THIS FACT IN REMOVAL OF CURB.

(11) CONTRACTOR TO CONTACT OWNER A MINIMUM OF 48 HOURS PRIOR TO DEMOLITION ACTIVITY OCCURRING. ANY DAMAGE TO SPRINKLER SYSTEM WILL BE REPAIRED TO EXISTING OR BETTER CONDITIONS AT NO ADDITIONAL COST TO THE OWNER.

CAUTION
GAS IN AREA

!!!CAUTION!!!
EXISTING OVERHEAD UTILITIES IN VICINITY. CONTRACTOR SHALL EXERCISE EXTREME CAUTION WHEN WORKING NEAR ELECTRIC FACILITIES.

!!!WARNING!!!
THE ENGINEER ASSUMES NO RESPONSIBILITY FOR THE ACCURACY OF THE LOCATION OF UNDERGROUND UTILITIES. THE CONTRACTOR SHALL BE RESPONSIBLE FOR LOCATION AND AVOIDING ALL EXISTING UTILITIES BY CALLING THE 'ONE CALL' LOCATOR SERVICE AT (800)344-8377 AT LEAST 48 HOURS PRIOR TO CONSTRUCTION.

CP&Y, INC.
TEXAS REGISTERED ENGINEERING FIRM
TBPE F-1741

STATE OF TEXAS
DAVID L. MAREK
#83327
REGISTERED PROFESSIONAL ENGINEER
4-14-2023

NO.	REVISION	BY	DATE

VERIFY SCALE 1" 0
BAR LENGTH EQUALS ONE INCH ON ORIGINAL DRAWING. VERIFY LENGTH ON THIS SHEET AND ADJUST SCALE ACCORDINGLY.

CITY OF WACO
WEBSTER AVE EAST CURBLINE IMPROVEMENTS

DEMOLITION PLAN
STA. 13+00 TO STA. 16+50

DESIGN: DLM
DRAWN: ECM
REVIEW: DLM
CP&Y: CWAC2200983
CLIENT:

SHEET
C402

PRINTED BY: emcdougald DATE: 4/12/2023
FILE PATH: G:\Projects\MSIL2100126 WEBSTER SIDEWALK\DWG\VA CURB DRAWINGS\MSIL2100126-C21-DEMO PLAN.dwg, C402

G:\Projects\MSIL2100126 WEBSTER SIDEWALK\DWG\VA CURB DRAWINGS\MSIL2100126-C21-DEMO PLAN.dwg, C402, 4/14/2023 2:26:09 PM, 1:1

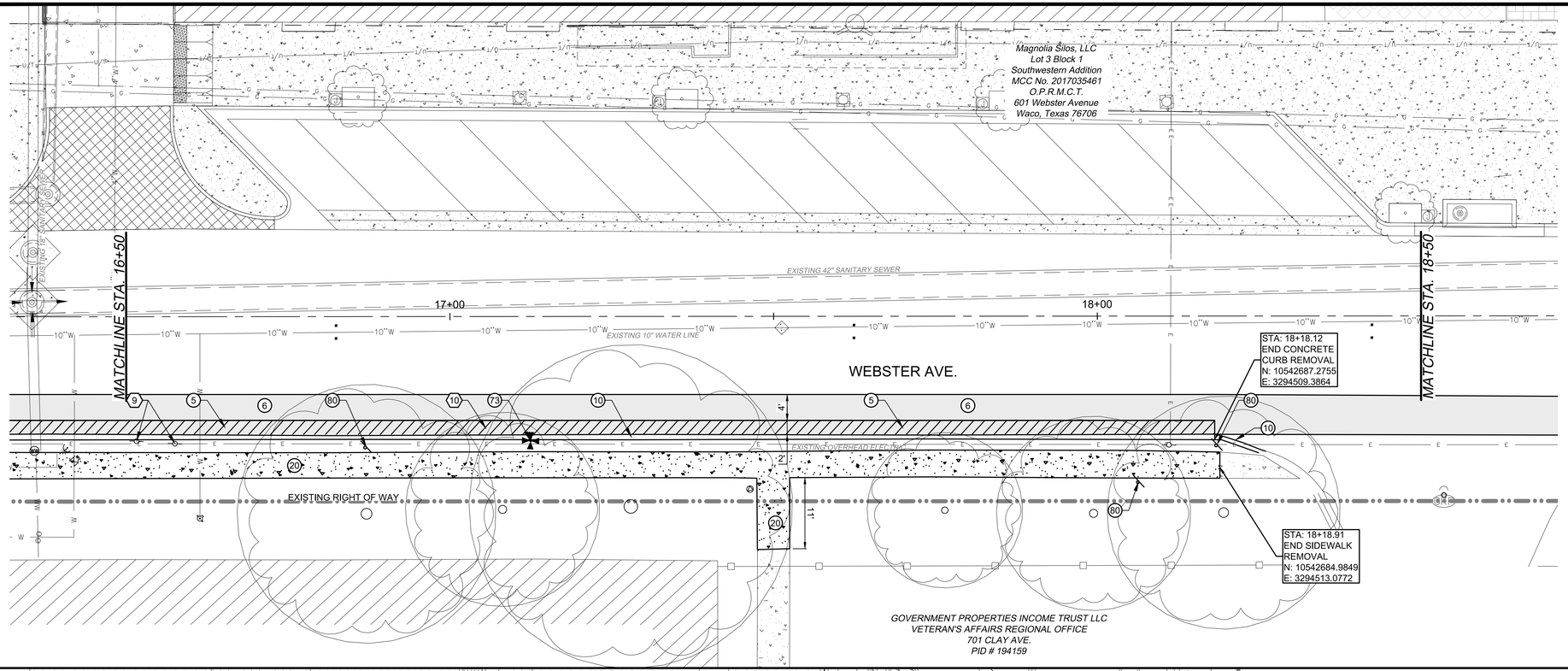

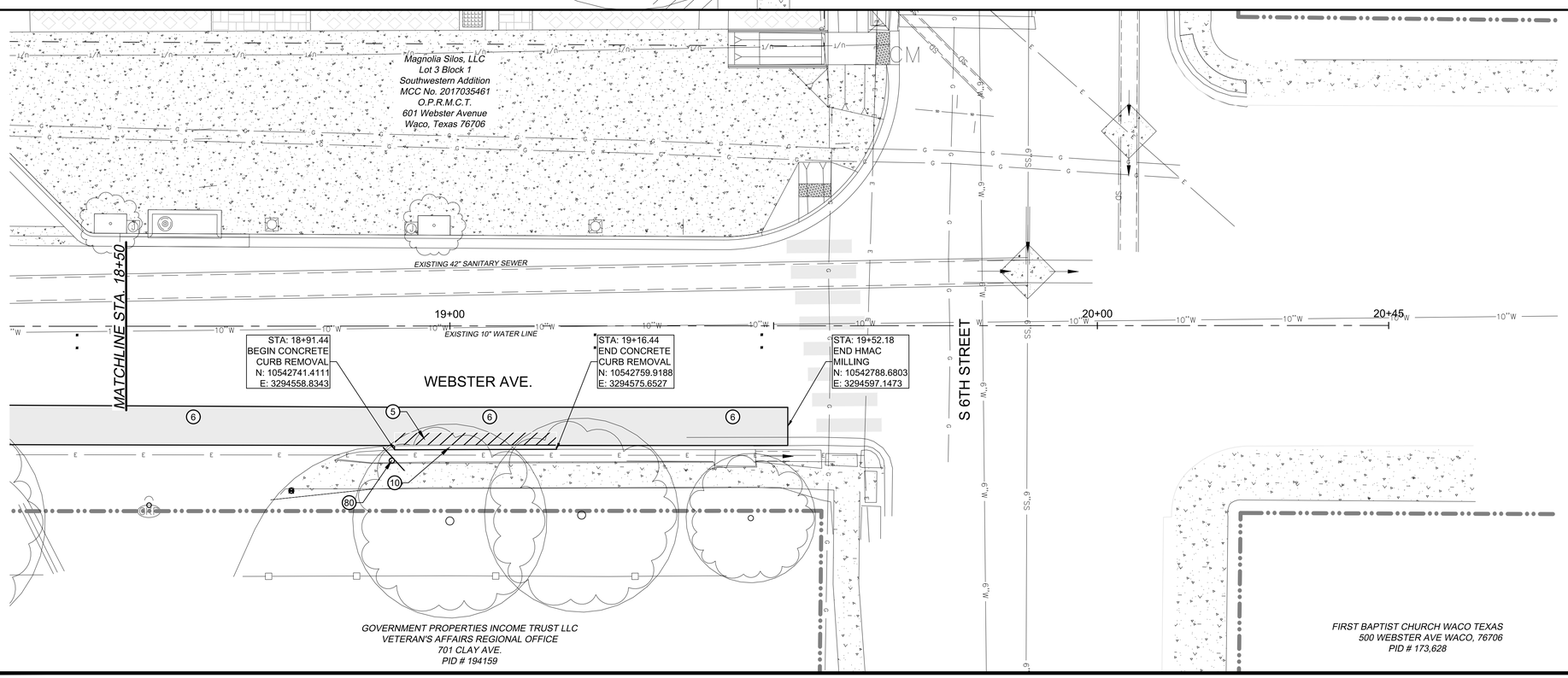

0 10 20
SCALE IN FEET

DEMOLITION CALLOUTS

(5) HMAC & BASE (ALL DEPTHS) TO BE SAWCUT, REMOVED, & DISPOSED OFFSITE. CONTRACTOR TO PROVIDE NECESSARY EXCAVATION AND/OR FILL TO OBTAIN DESIGN SUBGRADE. COST TO BE SUBSIDIARY TO BID ITEM

(6) HMAC TO BE MILLED (VARIABLE DEPTH)(SEE CROSS SECTIONS). CONTRACTOR TO DISPOSE OF MILLINGS IN OFFSITE LOCATION

(10) CONCRETE CURB OR CURB & GUTTER (ALL TYPES) TO BE SAWCUT, REMOVED & DISPOSED OFFSITE. CONTRACTOR TO REMOVE HMAC & BASE NECESSARY FOR CURB & GUTTER CONSTRUCTION.

(20) REINFORCED CONCRETE SIDEWALK TO BE SAWCUT, REMOVED & DISPOSED OFFSITE. CONTRACTOR TO PROVIDE NECESSARY EXCAVATION AND/OR PLACEMENT OF SELECT FILL TO OBTAIN DESIGN SUBGRADE. COST SHALL BE SUBSIDIARY TO REMOVAL BID ITEM

(73) EXISTING IRRIGATION HEAD TO BE REMOVED & DISPOSED OFFSITE. CONTRACTOR TO CAP IRRIGATION LINES.

(80) EXISTING SIGN, POLE & FOUNDATION TO BE REMOVED. RETAIN SIGN FOR REINSTALLATION. POLE & FOUNDATION TO BE DISPOSED OFFSITE IN APPROVED LOCATION. INSTALL SELECT FILL IN EXCAVATED VOID. COST OF FILL INSTALLATION TO BE INCIDENTAL TO ITEM OF WORK

SPECIAL PROJECT NOTES

(9) EXISTING POWER POLE TO REMAIN. CONTRACTOR TO NOTIFY POLE OWNER A MINIMUM OF 48 HOURS IN ADVANCE OF CONSTRUCTION

(10) EXISTING CURB CONTAINS GUTTER PAN. CONTRACTOR TO ANTICIPATE THIS FACT IN REMOVAL OF CURB.

(11) CONTRACTOR TO CONTACT OWNER A MINIMUM OF 48 HOURS PRIOR TO DEMOLITION ACTIVITY OCCURRING. ANY DAMAGE TO SPRINKLER SYSTEM WILL BE REPAIRED TO EXISTING OR BETTER CONDITIONS AT NO ADDITIONAL COST TO THE OWNER.

CAUTION
GAS IN AREA

!!!CAUTION!!!
EXISTING OVERHEAD UTILITIES IN VICINITY. CONTRACTOR SHALL EXERCISE EXTREME CAUTION WHEN WORKING NEAR ELECTRIC FACILITIES.

!!!WARNING!!!
THE ENGINEER ASSUMES NO RESPONSIBILITY FOR THE ACCURACY OF THE LOCATION OF UNDERGROUND UTILITIES. THE CONTRACTOR SHALL BE RESPONSIBLE FOR LOCATION AND AVOIDING ALL EXISTING UTILITIES BY CALLING THE 'ONE CALL' LOCATOR SERVICE AT (800)344-8377 AT LEAST 48 HOURS PRIOR TO CONSTRUCTION.

CP&Y, INC.
TEXAS REGISTERED ENGINEERING FIRM
TBPE F-1741

STATE OF TEXAS
DAVID L. MAREK
#83327
REGISTERED
PROFESSIONAL ENGINEER
4-14-2023

NO.	REVISION	BY	DATE

VERIFY SCALE 0 1"
BAR LENGTH EQUALS ONE INCH ON ORIGINAL DRAWING. VERIFY LENGTH ON THIS SHEET AND ADJUST SCALE ACCORDINGLY

CITY OF WACO
WEBSTER AVE EAST CURBLINE IMPROVEMENTS

DEMOLITION PLAN
STA. 16+50 TO END

DESIGN: DLM
DRAWN: ECM
REVIEW: DLM
CP&Y: CWAC2200983
CLIENT:

SHEET
C403

PRINTED BY: emcdougald DATE: 4/12/2023
FILE PATH: G:\Projects\MSIL2100126 WEBSTER SIDEWALK\DWG\VA CURB DRAWINGS\MSIL2100126-C21-DEMO PLAN.dwg, C403

G:\Projects\MSIL2100126 WEBSTER SIDEWALK\DWG\VA CURB DRAWINGS\MSIL2100126-C21-DEMO PLAN.dwg, C403, 4/14/2023 2:26:16 PM, 1:1

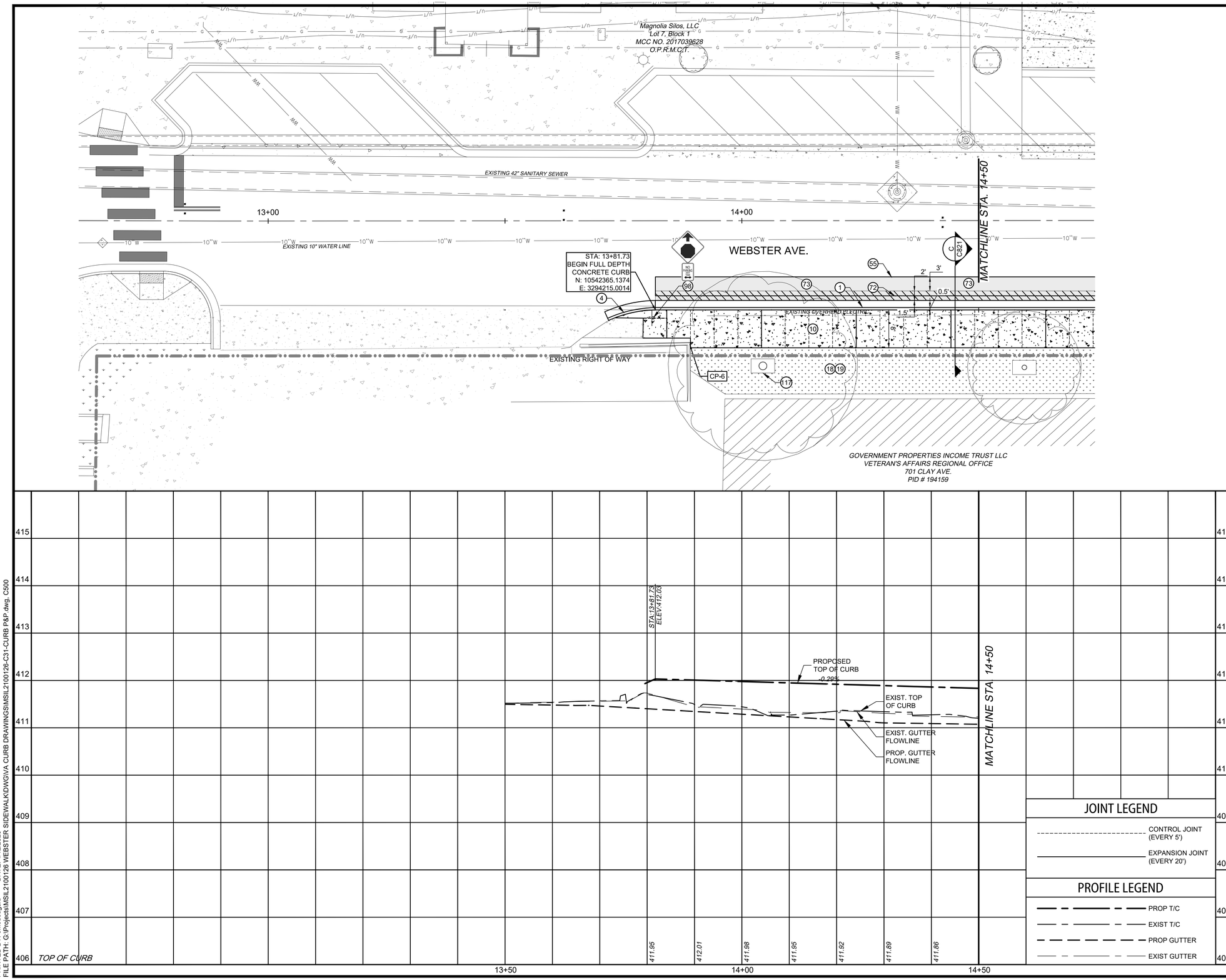

HORZ 0 10 20
VERT 0 1 2
SCALE IN FEET

SITE CALLOUTS

1. REINFORCED CONCRETE STANDARD CURB & GUTTER PER C.O.W. STANDARDS
4. CURB TRANSITION
10. REINFORCED CONCRETE SIDEWALK PER C.O.W. STD DETAILS, INCLUDING VARIABLE HEIGHT CURB
    MIN. CROSS SLOPE: 1%
    MAX CROSS SLOPE: 2%
    VERTICAL DIFFERENCE AT ALL THRESHOLDS TO BE 1/4" MAXIMUM
18. SOLID BLOCK SOD. VARIETY TO MATCH EXISTING VARIETY. SCARIFY EXISTING GROUND PRIOR TO PLACEMENT. PROVIDE WATERING AS NEEDED TO ESTABLISH SOD AT NO ADDITIONAL COST TO OWNER
19. SELECT FILL TO WITHIN 8" OF FINAL GRADE. INSTALL 4" OF RECLAIMED OR IMPORTED TOPSOIL ON SELECT FILL
55. CRACKSEAL NEW ASPHALT EDGES WITH CRAFCO POLYFLEX TYPE 3 OR APPROVED EQUAL
72. 2" HMAC TYPE 'C' & 2000 PSI CONCRETE BASE PER C.O.W. DETAIL ST-20
73. VARIABLE THICKNESS HMAC OVERLAY, TxDOT ITEM 340, TYPE 'C'. INCLUDING TRAIL, HOT APPLIED
98. INSTALL NEW POLE & FOUNDATION PER C.O.W. DETAIL T-6. REATTACH RETAINED SIGNAGE. IF DAMAGED, CONTRACTOR TO REPLACE SIGN AT NO ADDITIONAL COST TO OWNER.
117. 5'X3' TREE WELL W/ ROOT BARRIER PER C.O.W. DETAIL G-3

SPECIAL PROJECT NOTES

11. CONTRACTOR TO CONTACT OWNER A MINIMUM OF 48 HOURS PRIOR TO DEMOLITION ACTIVITY OCCURRING. ANY DAMAGE TO SPRINKLER SYSTEM WILL BE REPAIRED TO EXISTING OR BETTER CONDITIONS AT NO ADDITIONAL COST TO THE OWNER.

JOINT LEGEND

- CONTROL JOINT (EVERY 5')
- EXPANSION JOINT (EVERY 20')

PROFILE LEGEND

- PROP T/C
- EXIST T/C
- PROP GUTTER
- EXIST GUTTER

CAUTION
GAS IN AREA

!!!CAUTION!!!
EXISTING OVERHEAD UTILITIES IN VICINITY. CONTRACTOR SHALL EXERCISE EXTREME CAUTION WHEN WORKING NEAR ELECTRIC FACILITIES.

!!!WARNING!!!
THE ENGINEER ASSUMES NO RESPONSIBILITY FOR THE ACCURACY OF THE LOCATION OF UNDERGROUND UTILITIES. THE CONTRACTOR SHALL BE RESPONSIBLE FOR LOCATION AND AVOIDING ALL EXISTING UTILITIES BY CALLING THE 'ONE CALL' LOCATOR SERVICE AT (800)344-8377 AT LEAST 48 HOURS PRIOR TO CONSTRUCTION.

CP&Y, INC.
TEXAS REGISTERED ENGINEERING FIRM
TBPE F-1741

STATE OF TEXAS
DAVID L. MAREK
#83327
REGISTERED PROFESSIONAL ENGINEER
4-14-2023

NO.	REVISION	BY	DATE

VERIFY SCALE 0 1"
BAR LENGTH EQUALS ONE INCH ON ORIGINAL DRAWING. VERIFY LENGTH ON THIS SHEET AND ADJUST SCALE ACCORDINGLY

CITY OF WACO
WEBSTER AVE EAST CURBLINE IMPROVEMENTS
STREET SCAPING IMPROVEMENTS
STA. 13+00 TO STA. 14+50

DESIGN: DLM
DRAWN: ECM
REVIEW: DLM
CP&Y: CWAC2200983
CLIENT:

SHEET
C500

PRINTED BY: emcdougald DATE: 4/12/2023
FILE PATH: G:\Projects\MSIL2100126 WEBSTER SIDEWALK\DWG\VA CURB DRAWINGS\MSIL2100126-C31-CURB P&P.dwg, C500

G:\Projects\MSIL2100126 WEBSTER SIDEWALK\DWG\VA CURB DRAWINGS\MSIL2100126-C31-CURB P&P.dwg, C500, 4/12/2023 4:09:29 PM, 1:1

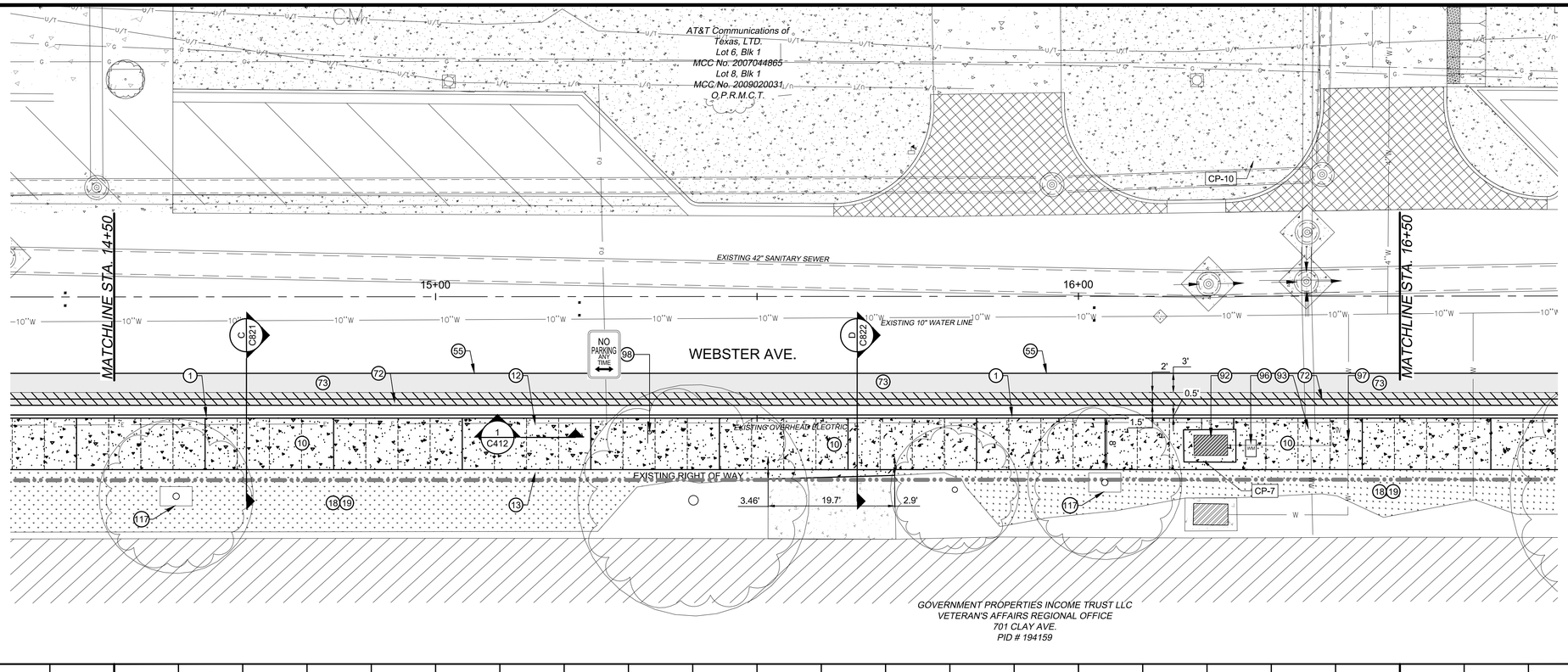

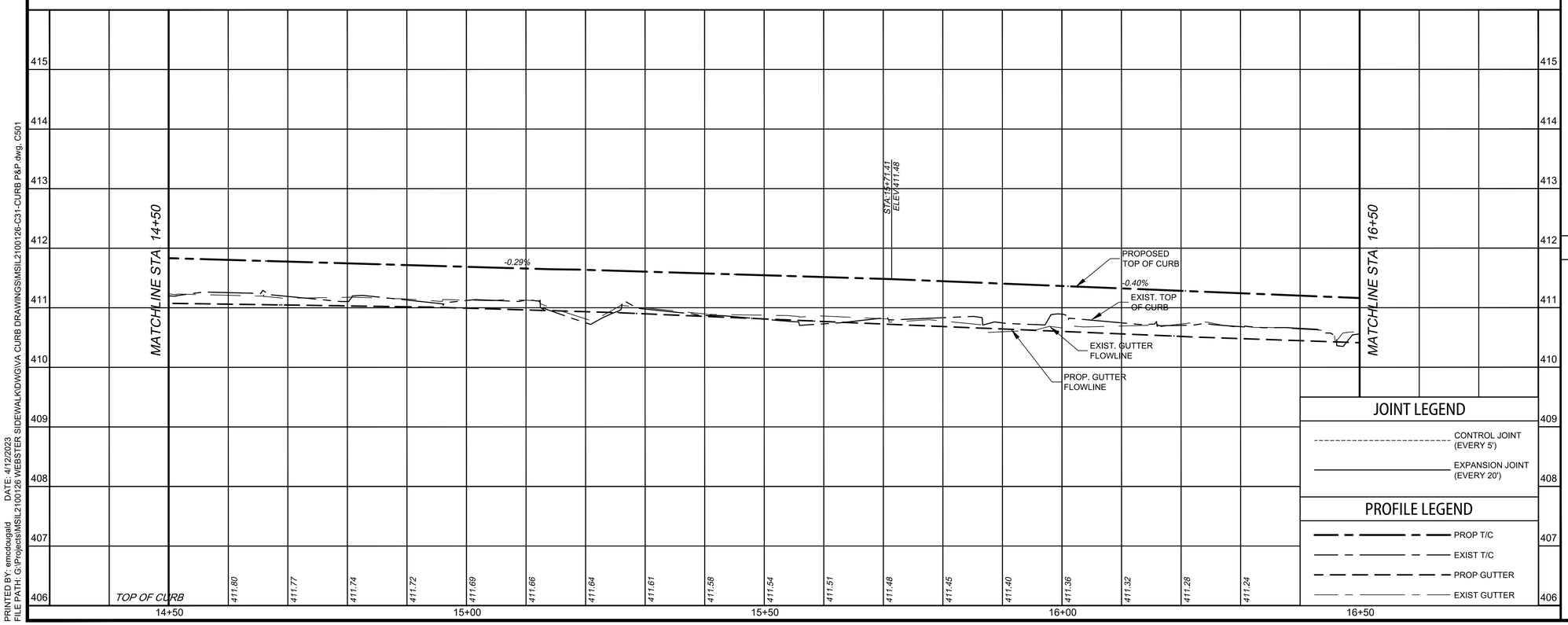

JOINT LEGEND

- CONTROL JOINT (EVERY 5')
- EXPANSION JOINT (EVERY 20')

PROFILE LEGEND

- PROP T/C
- EXIST T/C
- PROP GUTTER
- EXIST GUTTER

HORZ 0 10 20
VERT 0 1 2
SCALE IN FEET

SITE CALLOUTS

1. REINFORCED CONCRETE STANDARD CURB & GUTTER PER C.O.W. STANDARDS
4. CURB TRANSITION
10. REINFORCED CONCRETE SIDEWALK PER C.O.W. STD DETAILS, INCLUDING VARIABLE HEIGHT CURB
    MIN. CROSS SLOPE: 1%
    MAX CROSS SLOPE: 2%
    VERTICAL DIFFERENCE AT ALL THRESHOLDS TO BE 1/4" MAXIMUM
18. SOLID BLOCK SOD. VARIETY TO MATCH EXISTING VARIETY. SCARIFY EXISTING GROUND PRIOR TO PLACEMENT. PROVIDE WATERING AS NEEDED TO ESTABLISH SOD AT NO ADDITIONAL COST TO OWNER
19. SELECT FILL TO WITHIN 8" OF FINAL GRADE. INSTALL 4" OF RECLAIMED OR IMPORTED TOPSOIL ON SELECT FILL
55. CRACKSEAL NEW ASPHALT EDGES WITH CRAFCO POLYFLEX TYPE 3 OR APPROVED EQUAL
72. 2" HMAC TYPE 'C' & 2000 PSI CONCRETE BASE PER C.O.W. DETAIL ST-20
73. VARIABLE THICKNESS HMAC OVERLAY, TxDOT ITEM 340, TYPE 'C'. INCLUDING TRAIL, HOT APPLIED
96. INSTALL NEW WATER METER BOX, FLUSH WITH FINAL SIDEWALK GRADE & ELEVATION PER CITY OF WACO DETAIL W-17 OR W-18. RELOCATE EXISTING METER & CONNECT TO EXISTING SERVICE
97. INSTALL NEW WATER VALVE BOX, FLUSH WITH FINAL PAVEMENT GRADE & ELEVATION PER CITY OF WACO DETAIL W-7 OR W-8
98. INSTALL NEW POLE & FOUNDATION PER C.O.W. DETAIL T-6. REATTACH RETAINED SIGNAGE. IF DAMAGED, CONTRACTOR TO REPLACE SIGN AT NO ADDITIONAL COST TO OWNER.
117. 5'X3' TREE WELL W/ ROOT BARRIER PER C.O.W. DETAIL G-3

SPECIAL PROJECT NOTES

11. CONTRACTOR TO CONTACT OWNER A MINIMUM OF 48 HOURS PRIOR TO DEMOLITION ACTIVITY OCCURRING. ANY DAMAGE TO SPRINKLER SYSTEM WILL BE REPAIRED TO EXISTING OR BETTER CONDITIONS AT NO ADDITIONAL COST TO THE OWNER.

CAUTION GAS IN AREA

!!!CAUTION!!!
EXISTING OVERHEAD UTILITIES IN VICINITY. CONTRACTOR SHALL EXERCISE EXTREME CAUTION WHEN WORKING NEAR ELECTRIC FACILITIES.

!!!WARNING!!!
THE ENGINEER ASSUMES NO RESPONSIBILITY FOR THE ACCURACY OF THE LOCATION OF UNDERGROUND UTILITIES. THE CONTRACTOR SHALL BE RESPONSIBLE FOR LOCATION AND AVOIDING ALL EXISTING UTILITIES BY CALLING THE 'ONE CALL' LOCATOR SERVICE AT (800)344-8377 AT LEAST 48 HOURS PRIOR TO CONSTRUCTION.

CP&Y, INC.
TEXAS REGISTERED ENGINEERING FIRM
TBPE F-1741

STATE OF TEXAS
DAVID L. MAREK
#83327
REGISTERED PROFESSIONAL ENGINEER
4-14-2023

NO.	REVISION	BY	DATE

VERIFY SCALE 0 1"
BAR LENGTH EQUALS ONE INCH ON ORIGINAL DRAWING. VERIFY LENGTH ON THIS SHEET AND ADJUST SCALE ACCORDINGLY

CITY OF WACO
WEBSTER AVE EAST CURBLINE IMPROVEMENTS

STREET SCAPING IMPROVEMENTS
STA. 14+50 TO STA. 16+50

DESIGN: DLM
DRAWN: ECM
REVIEW: DLM
CP&Y: CWAC2200983
CLIENT:

SHEET
C501

PRINTED BY: emcdougald DATE: 4/12/2023
FILE PATH: G:\Projects\MSIL2100126 WEBSTER SIDEWALK\DWG\VA CURB DRAWINGS\MSIL2100126-C31-CURB P&P.dwg, C501

G:\Projects\MSIL2100126 WEBSTER SIDEWALK\DWG\VA CURB DRAWINGS\MSIL2100126-C31-CURB P&P.dwg, C501, 4/12/2023 1:50:06 PM, 1:1

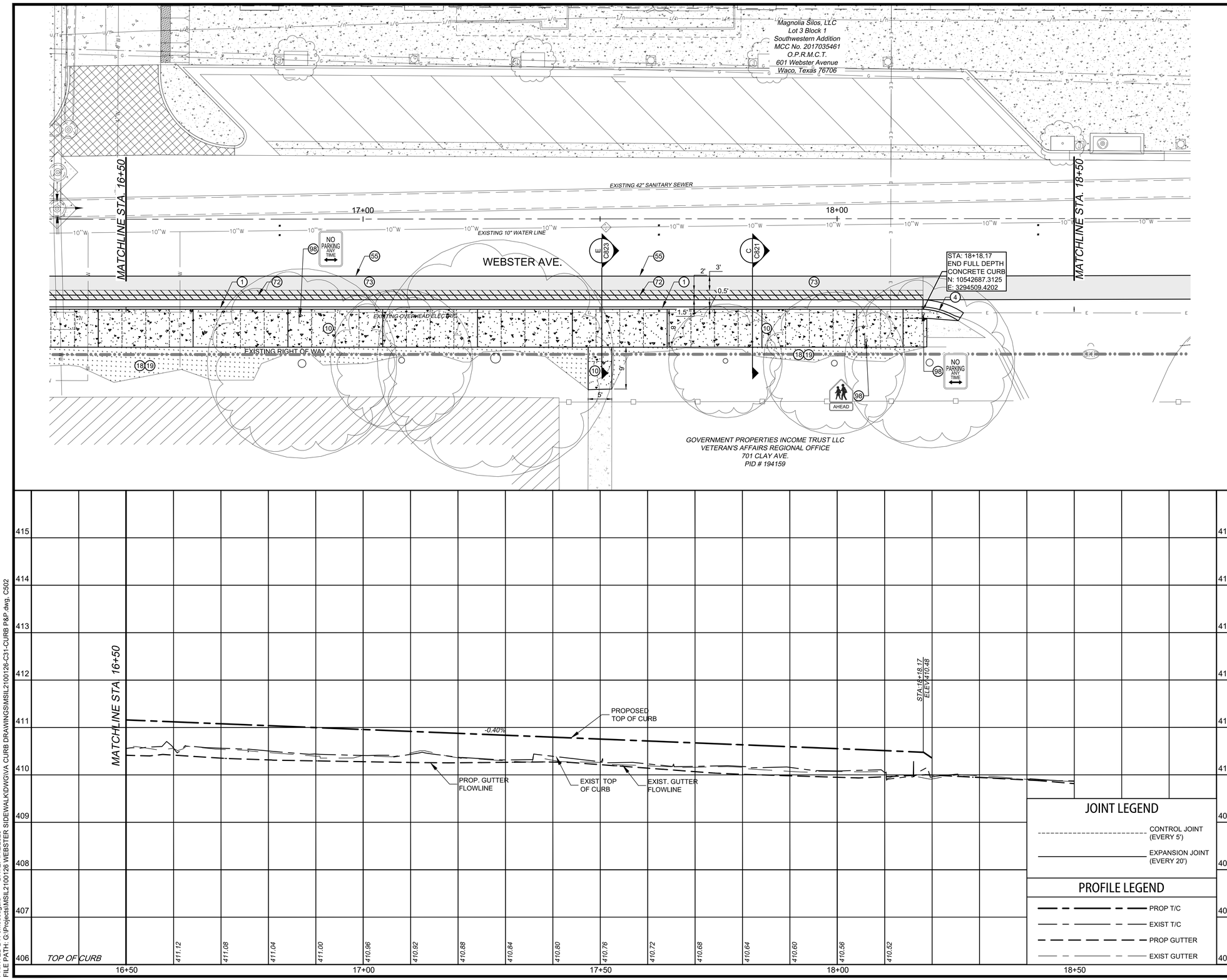

HORZ 0 10 20
VERT 0 1 2
SCALE IN FEET

SITE CALLOUTS

1. REINFORCED CONCRETE STANDARD CURB & GUTTER PER C.O.W. STANDARDS
4. CURB TRANSITION
10. REINFORCED CONCRETE SIDEWALK PER C.O.W. STD DETAILS, INCLUDING VARIABLE HEIGHT CURB
    MIN. CROSS SLOPE: 1%
    MAX CROSS SLOPE: 2%
    VERTICAL DIFFERENCE AT ALL THRESHOLDS TO BE 1/4" MAXIMUM
18. SOLID BLOCK SOD. VARIETY TO MATCH EXISTING VARIETY. SCARIFY EXISTING GROUND PRIOR TO PLACEMENT. PROVIDE WATERING AS NEEDED TO ESTABLISH SOD AT NO ADDITIONAL COST TO OWNER
19. SELECT FILL TO WITHIN 8" OF FINAL GRADE. INSTALL 4" OF RECLAIMED OR IMPORTED TOPSOIL ON SELECT FILL
55. CRACKSEAL NEW ASPHALT EDGES WITH CRAFCO POLYFLEX TYPE 3 OR APPROVED EQUAL
72. 2" HMAC TYPE 'C' & 2000 PSI CONCRETE BASE PER C.O.W. DETAIL ST-20
73. VARIABLE THICKNESS HMAC OVERLAY, TxDOT ITEM 340, TYPE 'C'. INCLUDING TRAIL, HOT APPLIED
98. INSTALL NEW POLE & FOUNDATION PER C.O.W. DETAIL T-6. REATTACH RETAINED SIGNAGE. IF DAMAGED, CONTRACTOR TO REPLACE SIGN AT NO ADDITIONAL COST TO OWNER.

SPECIAL PROJECT NOTES

11. CONTRACTOR TO CONTACT OWNER A MINIMUM OF 48 HOURS PRIOR TO DEMOLITION ACTIVITY OCCURRING. ANY DAMAGE TO SPRINKLER SYSTEM WILL BE REPAIRED TO EXISTING OR BETTER CONDITIONS AT NO ADDITIONAL COST TO THE OWNER.

JOINT LEGEND

- CONTROL JOINT (EVERY 5')
- EXPANSION JOINT (EVERY 20')

PROFILE LEGEND

- PROP T/C
- EXIST T/C
- PROP GUTTER
- EXIST GUTTER

CAUTION GAS IN AREA

!!!CAUTION!!!
EXISTING OVERHEAD UTILITIES IN VICINITY. CONTRACTOR SHALL EXERCISE EXTREME CAUTION WHEN WORKING NEAR ELECTRIC FACILITIES.

!!!WARNING!!!
THE ENGINEER ASSUMES NO RESPONSIBILITY FOR THE ACCURACY OF THE LOCATION OF UNDERGROUND UTILITIES. THE CONTRACTOR SHALL BE RESPONSIBLE FOR LOCATION AND AVOIDING ALL EXISTING UTILITIES BY CALLING THE 'ONE CALL' LOCATOR SERVICE AT (800)344-8377 AT LEAST 48 HOURS PRIOR TO CONSTRUCTION.

CP&Y, INC.
TEXAS REGISTERED ENGINEERING FIRM
TBPE F-1741

STATE OF TEXAS
DAVID L. MAREK
#83327
REGISTERED PROFESSIONAL ENGINEER
4-14-2023

NO.	REVISION	BY	DATE

VERIFY SCALE 1" 0
BAR LENGTH EQUALS ONE INCH ON ORIGINAL DRAWING. VERIFY LENGTH ON THIS SHEET AND ADJUST SCALE ACCORDINGLY.

CITY OF WACO
WEBSTER AVE EAST CURBLINE IMPROVEMENTS

STREET SCAPING IMPROVEMENTS
STA. 16+50 TO STA. 18+50

DESIGN: DLM
DRAWN: ECM
REVIEW: DLM
CP&Y: CWAC2200983
CLIENT:

SHEET
C502

PRINTED BY: emcdougald DATE: 4/12/2023
FILE PATH: G:\Projects\MSIL2100126 WEBSTER SIDEWALK\DWG\VA CURB DRAWINGS\MSIL2100126-C31-CURB P&P.dwg, C502

G:\Projects\MSIL2100126 WEBSTER SIDEWALK\DWG\VA CURB DRAWINGS\MSIL2100126-C31-CURB P&P.dwg, C502, 4/12/2023 1:50:11 PM, 1:1

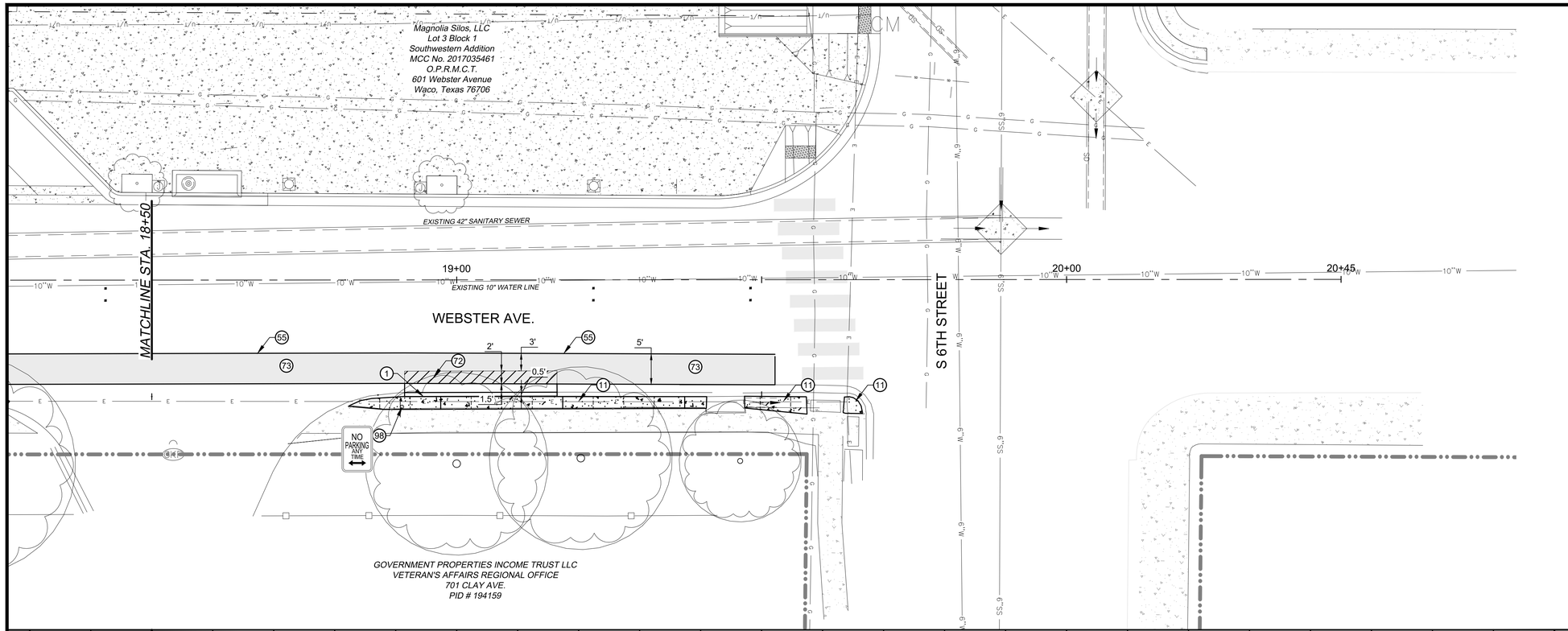

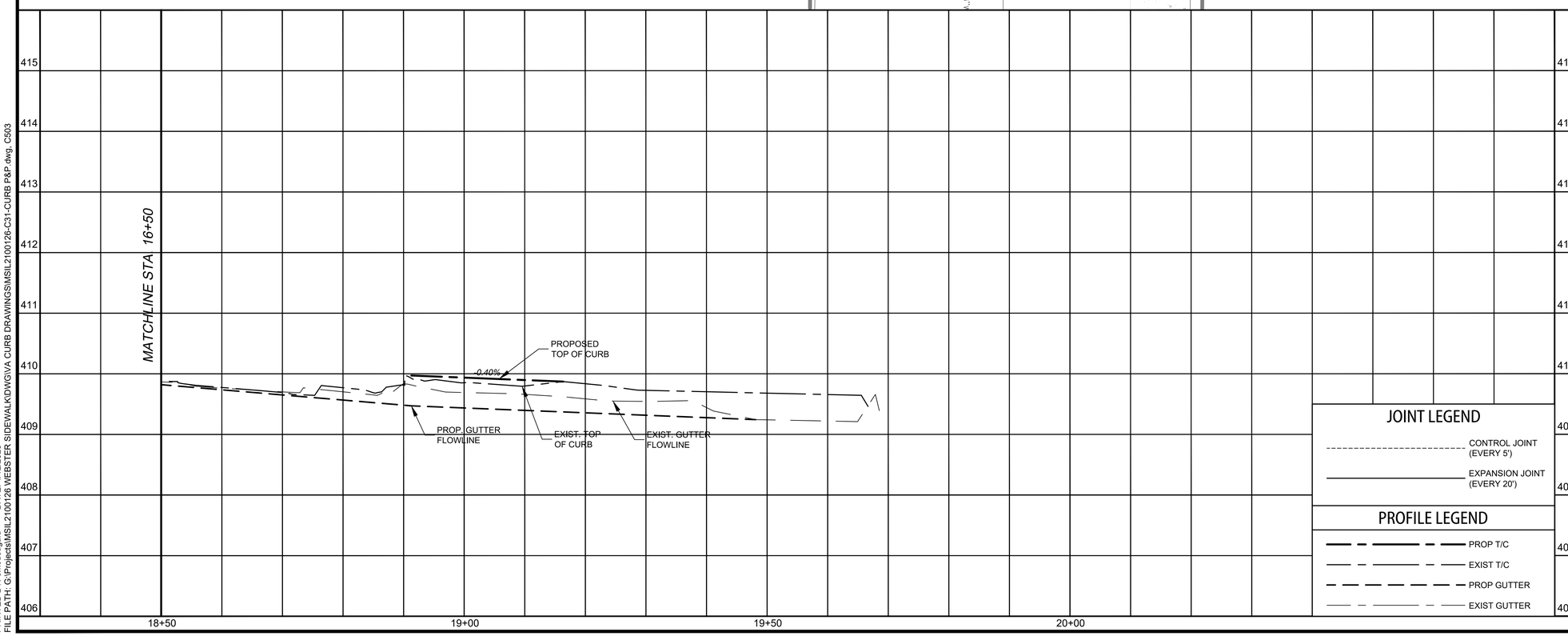

HORZ 0 10 20

VERT 0 1 2

SCALE IN FEET

SITE CALLOUTS

1. REINFORCED CONCRETE STANDARD CURB & GUTTER PER C.O.W. STANDARDS
11. REINFORCED CONCRETE SIDEWALK. DOWEL INTO EXISTING SIDEWALK AND CURB
55. CRACKSEAL NEW ASPHALT EDGES WITH CRAFCO POLYFLEX TYPE 3 OR APPROVED EQUAL
72. 2" HMAC TYPE 'C' & 2000 PSI CONCRETE BASE PER C.O.W. DETAIL ST-20
73. VARIABLE THICKNESS HMAC OVERLAY, TxDOT ITEM 340, TYPE 'C'. INCLUDING TRAIL, HOT APPLIED
98. INSTALL NEW POLE & FOUNDATION PER C.O.W. DETAIL T-6. REATTACH RETAINED SIGNAGE. IF DAMAGED, CONTRACTOR TO REPLACE SIGN AT NO ADDITIONAL COST TO OWNER.

SPECIAL PROJECT NOTES

11. CONTRACTOR TO CONTACT OWNER A MINIMUM OF 48 HOURS PRIOR TO DEMOLITION ACTIVITY OCCURRING. ANY DAMAGE TO SPRINKLER SYSTEM WILL BE REPAIRED TO EXISTING OR BETTER CONDITIONS AT NO ADDITIONAL COST TO THE OWNER.

JOINT LEGEND

- CONTROL JOINT (EVERY 5')
- EXPANSION JOINT (EVERY 20')

PROFILE LEGEND

- PROP T/C
- EXIST T/C
- PROP GUTTER
- EXIST GUTTER

CAUTION GAS IN AREA

!!!CAUTION!!!
EXISTING OVERHEAD UTILITIES IN VICINITY. CONTRACTOR SHALL EXERCISE EXTREME CAUTION WHEN WORKING NEAR ELECTRIC FACILITIES.

!!!WARNING!!!
THE ENGINEER ASSUMES NO RESPONSIBILITY FOR THE ACCURACY OF THE LOCATION OF UNDERGROUND UTILITIES. THE CONTRACTOR SHALL BE RESPONSIBLE FOR LOCATION AND AVOIDING ALL EXISTING UTILITIES BY CALLING THE 'ONE CALL' LOCATOR SERVICE AT (800)344-8377 AT LEAST 48 HOURS PRIOR TO CONSTRUCTION.

CP&Y, INC.
TEXAS REGISTERED ENGINEERING FIRM
TBPE F-1741

STATE OF TEXAS
DAVID L. MAREK
#83327
REGISTERED PROFESSIONAL ENGINEER
4-14-2023

NO.	REVISION	BY	DATE

VERIFY SCALE 1" 0
BAR LENGTH EQUALS ONE INCH ON ORIGINAL DRAWING. VERIFY LENGTH ON THIS SHEET AND ADJUST SCALE ACCORDINGLY.

CITY OF WACO
WEBSTER AVE EAST CURBLINE IMPROVEMENTS

STREET SCAPING IMPROVEMENTS
STA. 18+50 TO END

DESIGN: DLM
DRAWN: ECM
REVIEW: DLM
CP&Y: CWAC2200983
CLIENT:

SHEET
C503

PRINTED BY: emcdougald DATE: 4/12/2023
FILE PATH: G:\Projects\MSIL2100126 WEBSTER SIDEWALK\DWG\VA CURB DRAWINGS\MSIL2100126-C31-CURB P&P.dwg, C503

G:\Projects\MSIL2100126 WEBSTER SIDEWALK\DWG\VA CURB DRAWINGS\MSIL2100126-C31-CURB P&P.dwg, C503, 4/12/2023 1:50:16 PM, 1:1

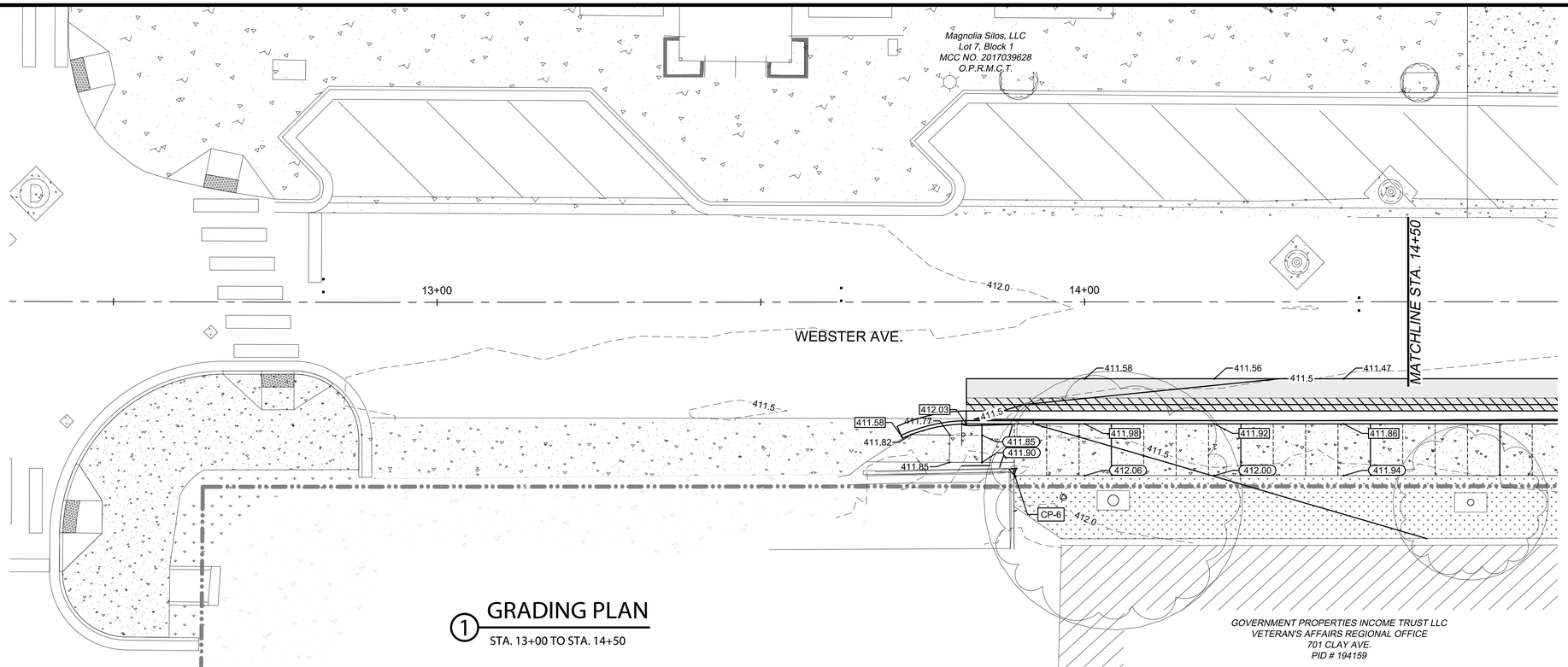

1 GRADING PLAN

STA. 13+00 TO STA. 14+50

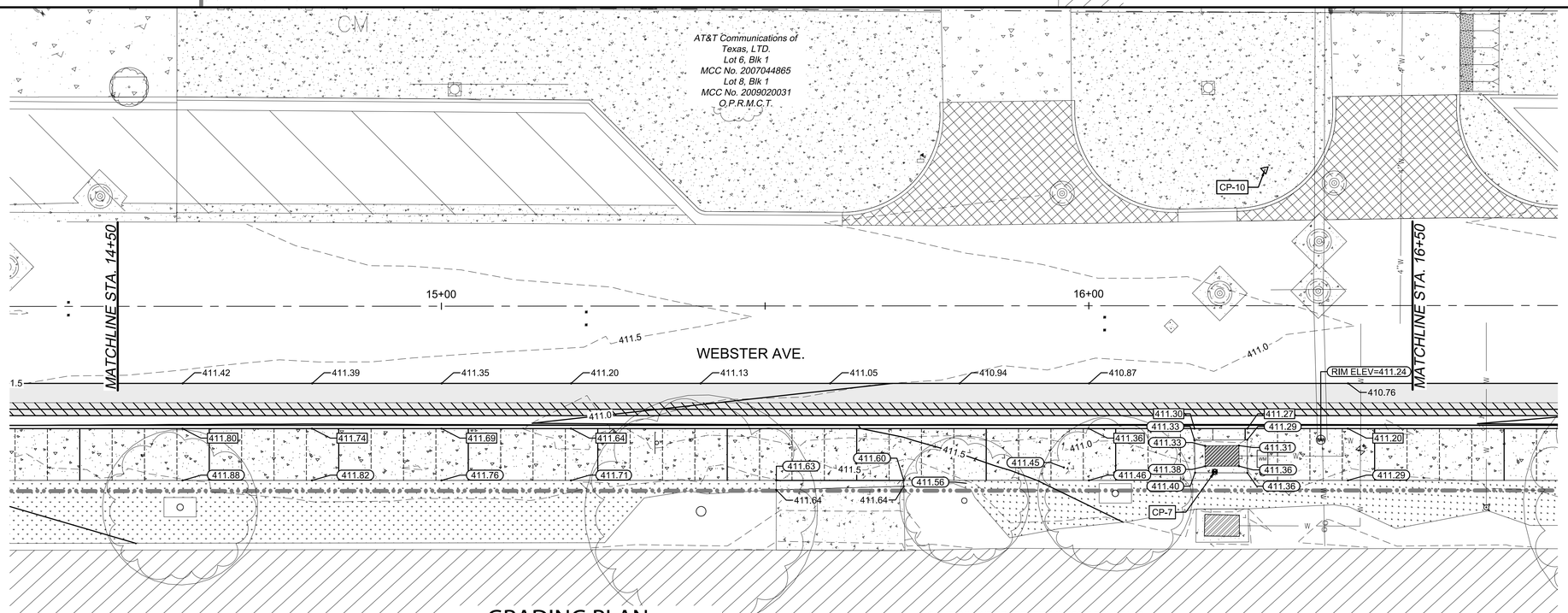

1 GRADING PLAN

STA. 14+50 TO STA. 16+50

HORZ 0 10 20

VERT 0 1 2

SCALE IN FEET

GRADING CALLOUTS

- 0.00 SPOT ELEVATION
- 0.00 TOP OF CURB ELEVATION
- 0.00 EXISTING ELEVATION

LEGEND

- EXISTING CONTOURS
- PROPOSED CONTOURS

CAUTION GAS IN AREA

!!!CAUTION!!!

EXISTING OVERHEAD UTILITIES IN VICINITY. CONTRACTOR SHALL EXERCISE EXTREME CAUTION WHEN WORKING NEAR ELECTRIC FACILITIES.

!!!WARNING!!!

THE ENGINEER ASSUMES NO RESPONSIBILITY FOR THE ACCURACY OF THE LOCATION OF UNDERGROUND UTILITIES. THE CONTRACTOR SHALL BE RESPONSIBLE FOR LOCATION AND AVOIDING ALL EXISTING UTILITIES BY CALLING THE 'ONE CALL' LOCATOR SERVICE AT (800)344-8377 AT LEAST 48 HOURS PRIOR TO CONSTRUCTION.

CP&Y, INC.
TEXAS REGISTERED ENGINEERING FIRM
TBPE F-1741

STATE OF TEXAS
DAVID L. MAREK
#83327
REGISTERED PROFESSIONAL ENGINEER
4-14-2023

NO.	REVISION	BY	DATE

VERIFY SCALE 0 1"
BAR LENGTH EQUALS ONE INCH ON ORIGINAL DRAWING. VERIFY LENGTH ON THIS SHEET AND ADJUST SCALE ACCORDINGLY

CITY OF WACO
WEBSTER AVE EAST CURBLINE IMPROVEMENTS

GRADING PLAN
STA. 13+00 TO STA. 16+50

DESIGN: DLM
DRAWN: ECM
REVIEW: DLM
CP&Y: CWAC2200983
CLIENT:

SHEET
C504

PRINTED BY: emcdougald DATE: 4/11/2023
FILE PATH: G:\Projects\MSIL2100126 WEBSTER SIDEWALK\DWG\VA CURB DRAWINGS\MSIL2100126-C32-GRADING PLAN.dwg, C504
G:\Projects\MSIL2100126 WEBSTER SIDEWALK\DWG\VA CURB DRAWINGS\MSIL2100126-C32-GRADING PLAN.dwg, C504, 4/13/2023 8:23:52 AM, 1:1

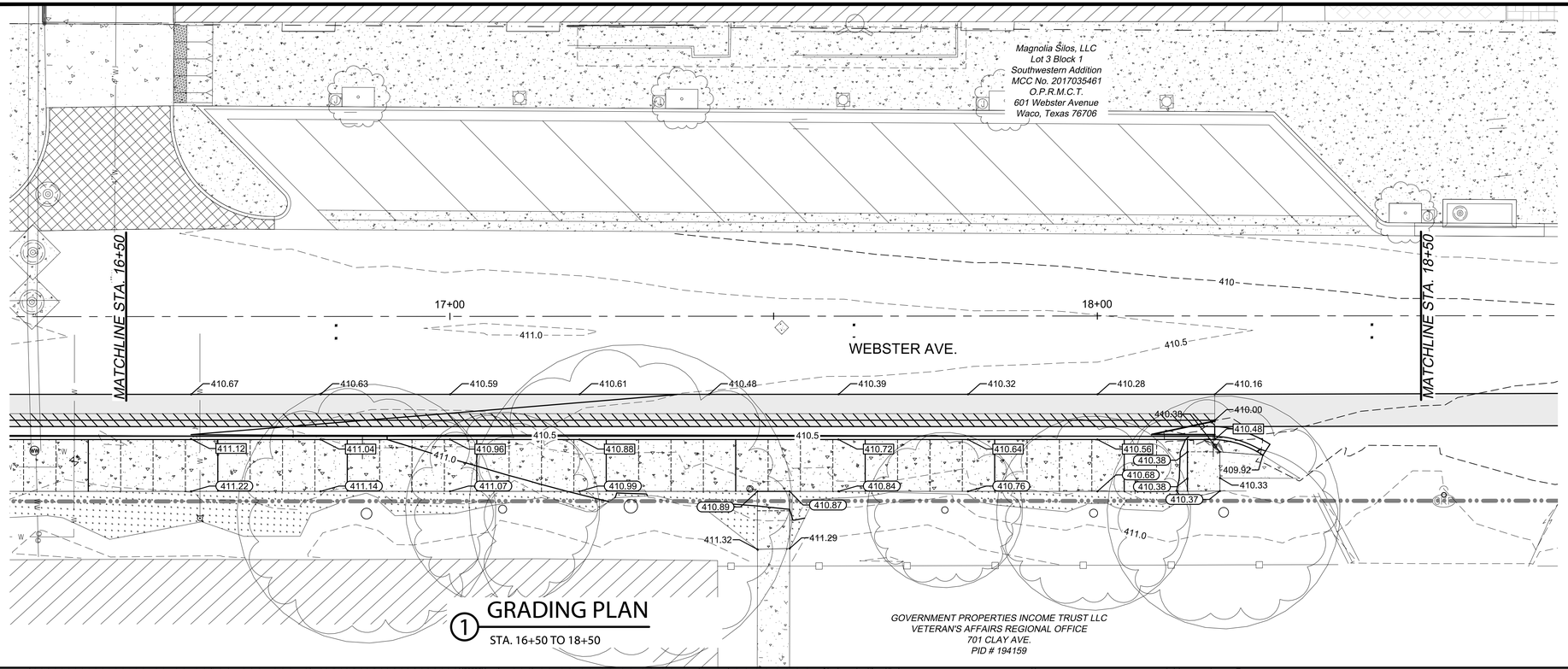

1 GRADING PLAN

STA. 16+50 TO 18+50

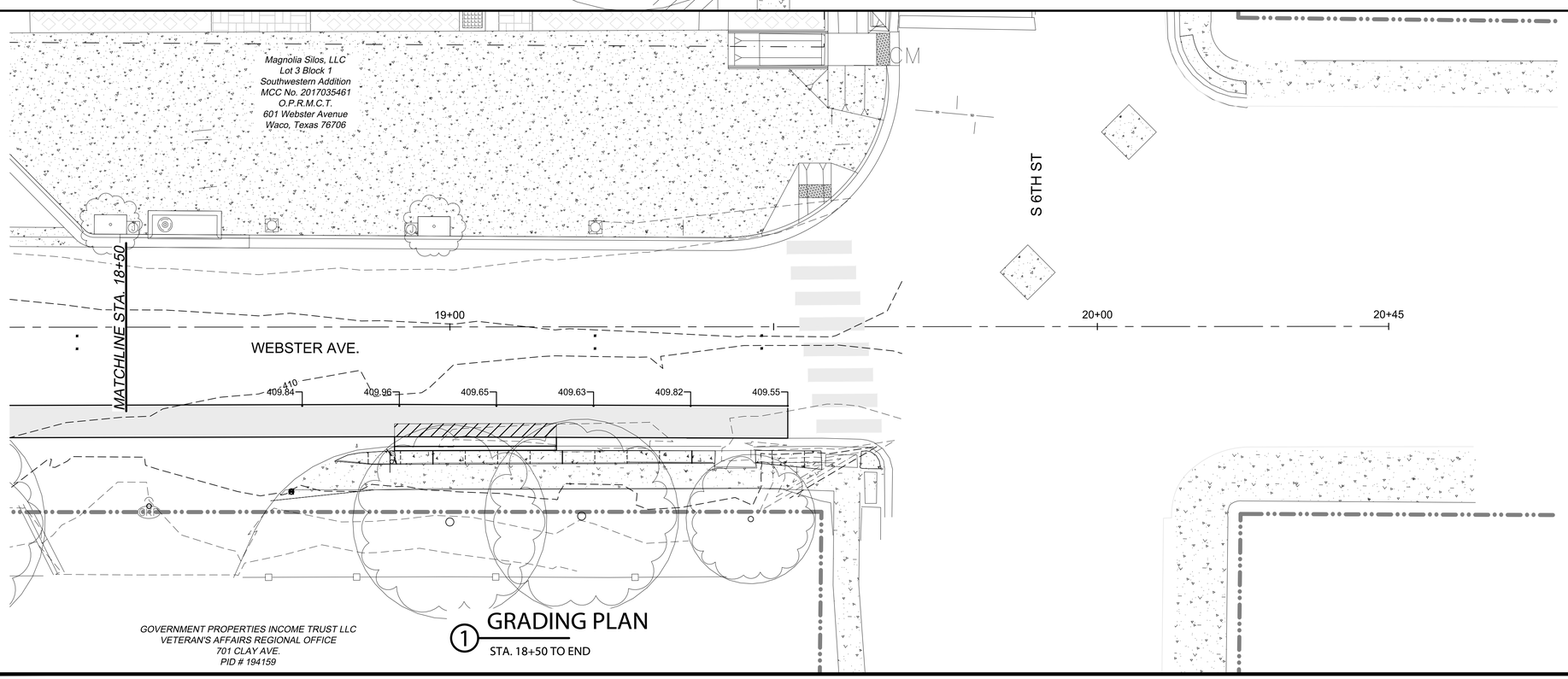

1 GRADING PLAN

STA. 18+50 TO END

HORZ 0 10 20

VERT 0 1 2

SCALE IN FEET

GRADING CALLOUTS

- 0.00 SPOT ELEVATION
- 0.00 TOP OF CURB ELEVATION
- 0.00 EXISTING ELEVATION

LEGEND

- EXISTING CONTOURS
- PROPOSED CONTOURS

CAUTION GAS IN AREA

!!!CAUTION!!!

EXISTING OVERHEAD UTILITIES IN VICINITY. CONTRACTOR SHALL EXERCISE EXTREME CAUTION WHEN WORKING NEAR ELECTRIC FACILITIES.

!!!WARNING!!!

THE ENGINEER ASSUMES NO RESPONSIBILITY FOR THE ACCURACY OF THE LOCATION OF UNDERGROUND UTILITIES. THE CONTRACTOR SHALL BE RESPONSIBLE FOR LOCATION AND AVOIDING ALL EXISTING UTILITIES BY CALLING THE 'ONE CALL' LOCATOR SERVICE AT (800)344-8377 AT LEAST 48 HOURS PRIOR TO CONSTRUCTION.

CP&Y, INC.
TEXAS REGISTERED ENGINEERING FIRM
TBPE F-1741

STATE OF TEXAS
DAVID L. MAREK
#83327
REGISTERED
PROFESSIONAL ENGINEER

4-14-2023

NO.	REVISION	BY	DATE

VERIFY SCALE 1" 0

BAR LENGTH EQUALS ONE INCH ON ORIGINAL DRAWING. VERIFY LENGTH ON THIS SHEET AND ADJUST SCALE ACCORDINGLY

CITY OF WACO
WEBSTER AVE EAST CURBLINE IMPROVEMENTS

GRADING PLAN
STA. 16+50 TO END

DESIGN: DLM
DRAWN: ECM
REVIEW: DLM
CP&Y: CWAC2200983
CLIENT:

SHEET
C505

PRINTED BY: emcdougald DATE: 4/11/2023
FILE PATH: G:\Projects\MSIL2100126 WEBSTER SIDEWALK\DWG\VA CURB DRAWINGS\MSIL2100126-C32-GRADING PLAN.dwg, C505
G:\Projects\MSIL2100126 WEBSTER SIDEWALK\DWG\VA CURB DRAWINGS\MSIL2100126-C32-GRADING PLAN.dwg, C505, 4/13/2023 8:23:26 AM, 1:1

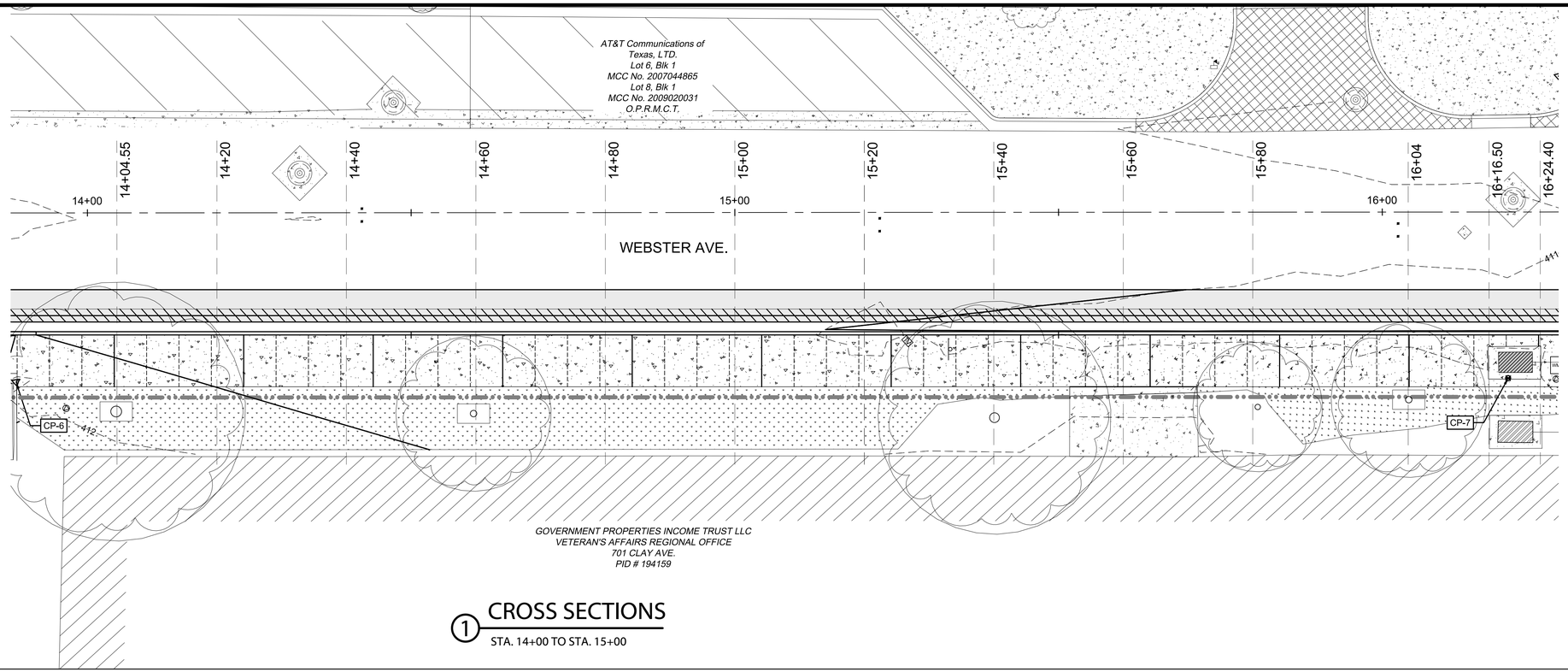

1 CROSS SECTIONS

STA. 14+00 TO STA. 15+00

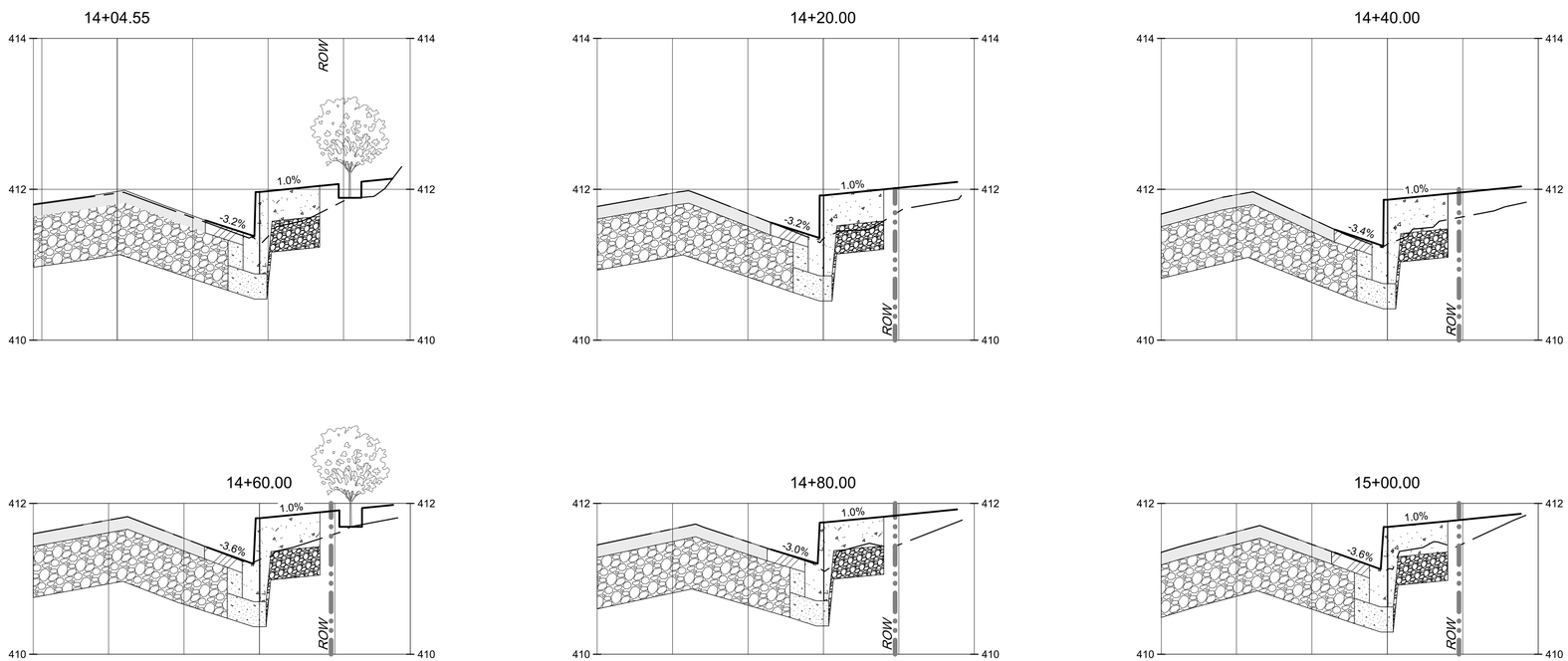

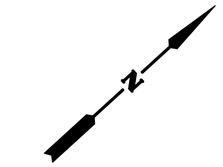

HORZ 0 10 20

VERT 0 1 2

SCALE IN FEET

LEGEND

- EXISTING CONTOURS
- PROPOSED CONTOURS
- EXISTING GRADE
- PROPOSED GRADE
- EXISTING HMAC PAVEMENT
- EXISTING PUG BASE
- PROPOSED HMAC PAVEMENT
- PROPOSED FLEXIBLE BASE
- PROPOSED REINFORCED CONCRETE PAVEMENT
- PROPOSED CEMENT STABILIZED BASE

CAUTION
GAS IN AREA

!!!CAUTION!!!
EXISTING OVERHEAD UTILITIES IN VICINITY. CONTRACTOR SHALL EXERCISE EXTREME CAUTION WHEN WORKING NEAR ELECTRIC FACILITIES.

!!!WARNING!!!
THE ENGINEER ASSUMES NO RESPONSIBILITY FOR THE ACCURACY OF THE LOCATION OF UNDERGROUND UTILITIES. THE CONTRACTOR SHALL BE RESPONSIBLE FOR LOCATION AND AVOIDING ALL EXISTING UTILITIES BY CALLING THE 'ONE CALL' LOCATOR SERVICE AT (800)344-8377 AT LEAST 48 HOURS PRIOR TO CONSTRUCTION.

CP&Y, INC.
TEXAS REGISTERED ENGINEERING FIRM
TBPE F-1741

STATE OF TEXAS
DAVID L. MAREK
#83327
REGISTERED
PROFESSIONAL ENGINEER
4-14-2023

NO.	REVISION	BY	DATE

VERIFY SCALE 0 1"
BAR LENGTH EQUALS ONE INCH ON ORIGINAL DRAWING. VERIFY LENGTH ON THIS SHEET AND ADJUST SCALE ACCORDINGLY

CITY OF WACO
WEBSTER AVE EAST CURBLINE IMPROVEMENTS

CROSS SECTIONS
STA. 14+00 TO STA. 15+00

DESIGN: DLM
DRAWN: ECM
REVIEW: DLM
CP&Y: CWAC2200983
CLIENT:

SHEET
C550

PRINTED BY: emcdougald DATE: 4/13/2023
FILE PATH: G:\Projects\MSIL2100126 WEBSTER SIDEWALK\DWG\VA CURB DRAWINGS\MSIL2100126-C33-CROSS SECTIONS.dwg, C550
G:\Projects\MSIL2100126 WEBSTER SIDEWALK\DWG\VA CURB DRAWINGS\MSIL2100126-C33-CROSS SECTIONS.dwg, C550, 4/13/2023 9:36:02 AM, 1:1

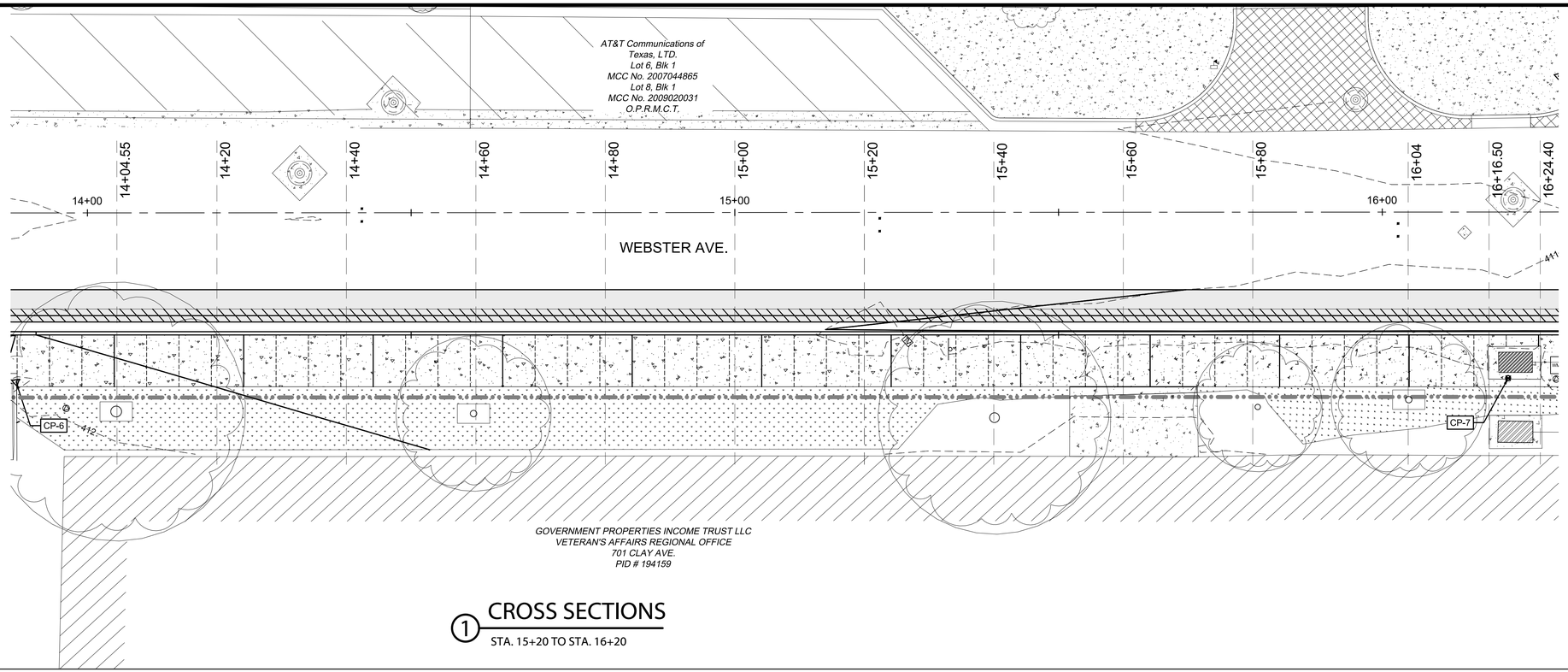

1 CROSS SECTIONS

STA. 15+20 TO STA. 16+20

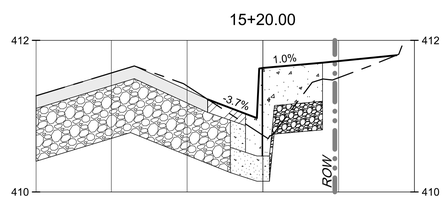

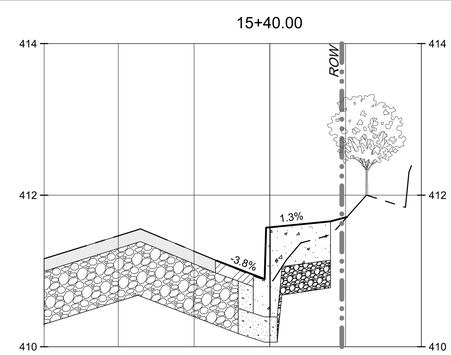

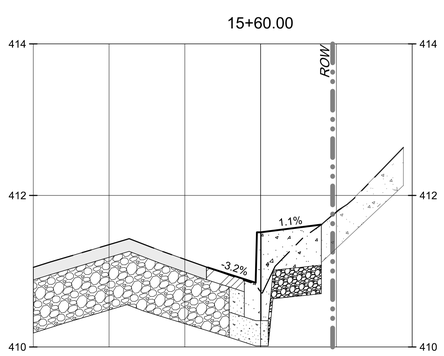

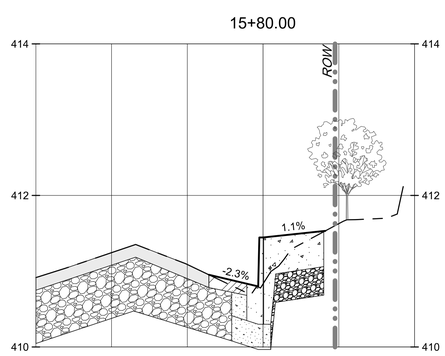

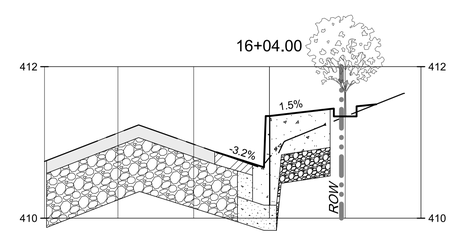

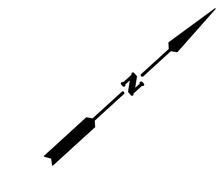

HORZ 0 10 20

VERT 0 1 2

SCALE IN FEET

LEGEND

- EXISTING CONTOURS
- PROPOSED CONTOURS
- EXISTING GRADE
- PROPOSED GRADE
- EXISTING HMAC PAVEMENT
- EXISTING PUG BASE
- PROPOSED HMAC PAVEMENT
- PROPOSED FLEXIBLE BASE
- PROPOSED REINFORCED CONCRETE PAVEMENT
- PROPOSED CEMENT STABILIZED BASE

CAUTION
GAS IN AREA

!!!CAUTION!!!
EXISTING OVERHEAD UTILITIES IN VICINITY. CONTRACTOR SHALL EXERCISE EXTREME CAUTION WHEN WORKING NEAR ELECTRIC FACILITIES.

!!!WARNING!!!
THE ENGINEER ASSUMES NO RESPONSIBILITY FOR THE ACCURACY OF THE LOCATION OF UNDERGROUND UTILITIES. THE CONTRACTOR SHALL BE RESPONSIBLE FOR LOCATION AND AVOIDING ALL EXISTING UTILITIES BY CALLING THE 'ONE CALL' LOCATOR SERVICE AT (800)344-8377 AT LEAST 48 HOURS PRIOR TO CONSTRUCTION.

CP&Y, INC.
TEXAS REGISTERED ENGINEERING FIRM
TBPE F-1741

STATE OF TEXAS
DAVID L. MAREK
#83327
REGISTERED
PROFESSIONAL ENGINEER
4-14-2023

NO.	REVISION	BY	DATE

VERIFY SCALE 0 1"
BAR LENGTH EQUALS ONE INCH ON ORIGINAL DRAWING. VERIFY LENGTH ON THIS SHEET AND ADJUST SCALE ACCORDINGLY

CITY OF WACO
WEBSTER AVE EAST CURBLINE IMPROVEMENTS

CROSS SECTIONS
STA. 15+20 TO STA. 16+04

DESIGN: DLM
DRAWN: ECM
REVIEW: DLM
CP&Y: CWAC2200983
CLIENT:

SHEET
C551

PRINTED BY: emcdougald DATE: 4/13/2023
FILE PATH: G:\Projects\MSIL2100126 WEBSTER SIDEWALK\DWG\VA CURB DRAWINGS\MSIL2100126-C33-CROSS SECTIONS.dwg, C551
G:\Projects\MSIL2100126 WEBSTER SIDEWALK\DWG\VA CURB DRAWINGS\MSIL2100126-C33-CROSS SECTIONS.dwg, C551, 4/13/2023 9:36:08 AM, 1:1

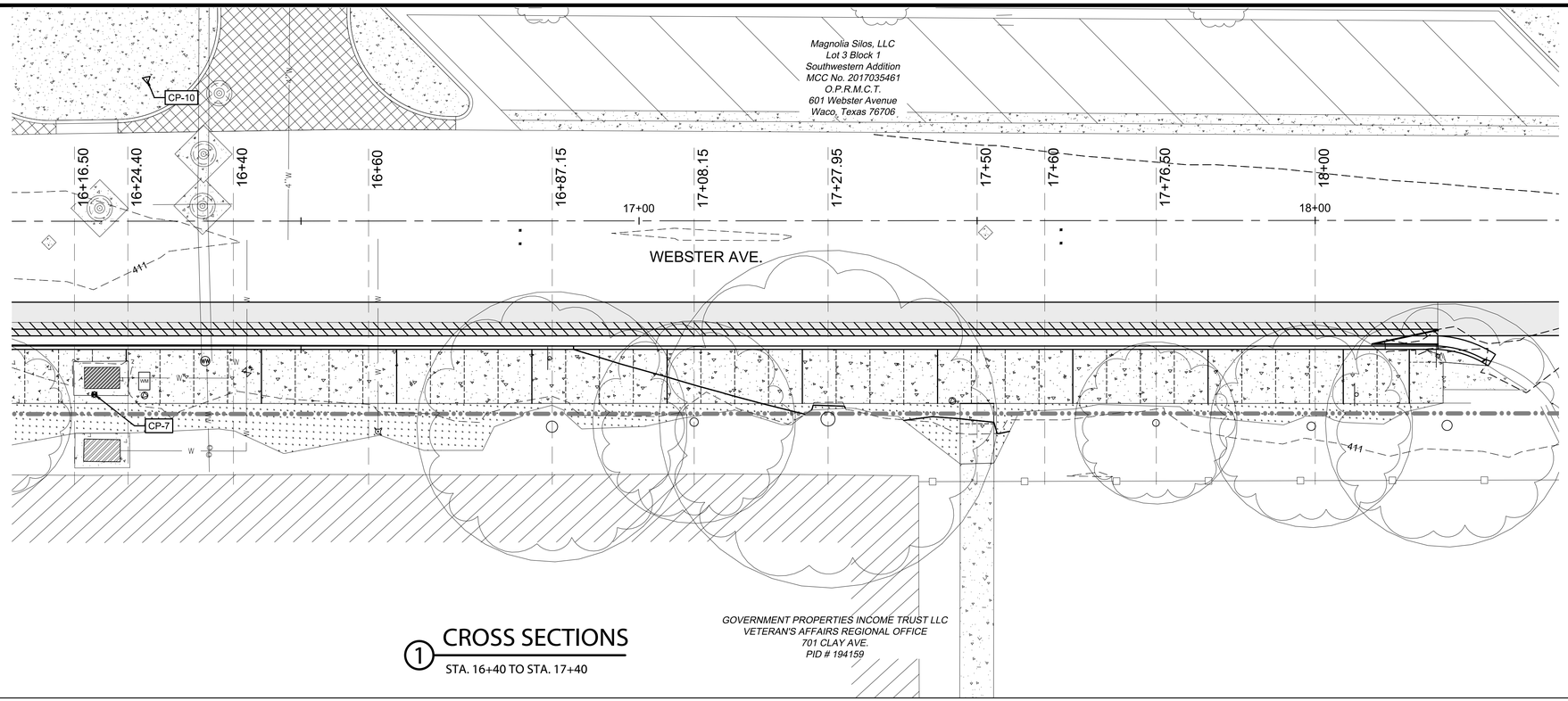

1 CROSS SECTIONS

STA. 16+40 TO STA. 17+40

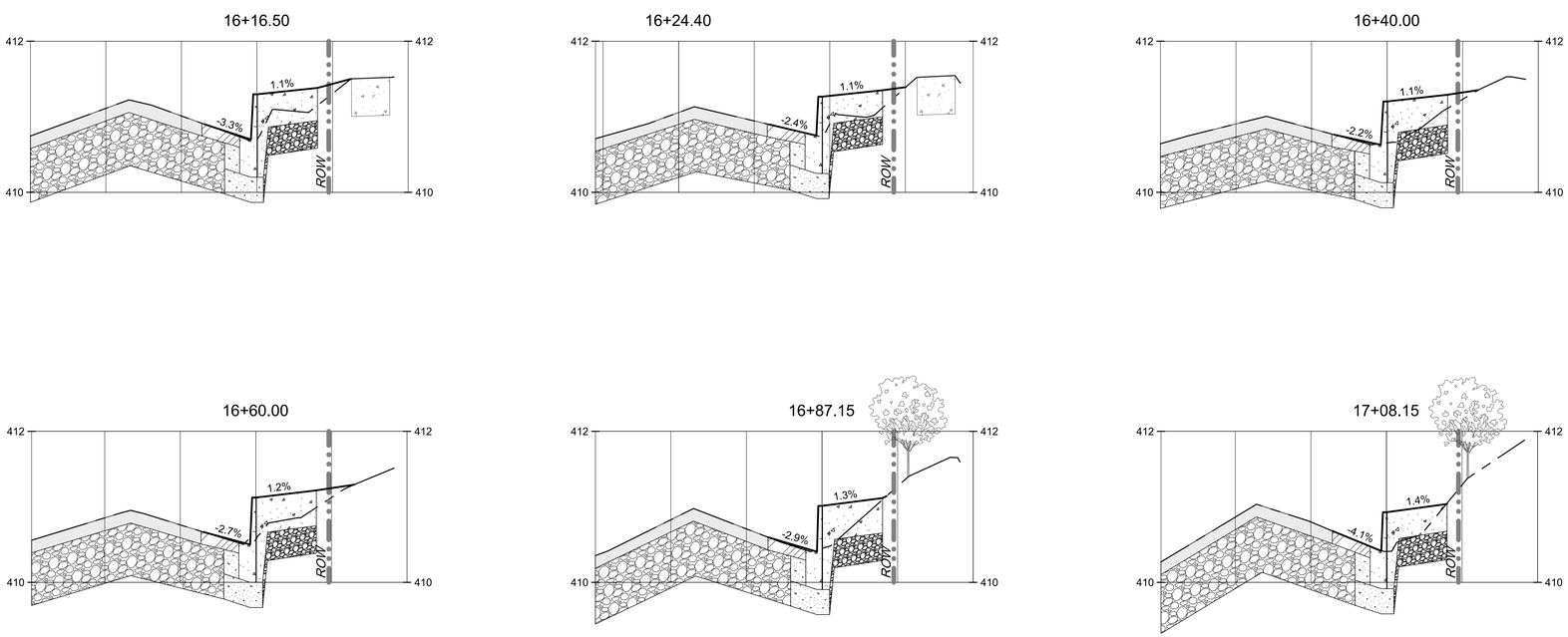

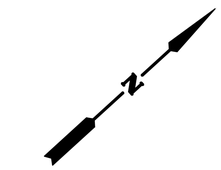

HORZ 0 10 20

VERT 0 1 2

SCALE IN FEET

LEGEND

- EXISTING CONTOURS
- PROPOSED CONTOURS
- EXISTING GRADE
- PROPOSED GRADE
- EXISTING HMAC PAVEMENT
- EXISTING PUG BASE
- PROPOSED HMAC PAVEMENT
- PROPOSED FLEXIBLE BASE
- PROPOSED REINFORCED CONCRETE PAVEMENT
- PROPOSED CEMENT STABILIZED BASE

CAUTION
GAS IN AREA

!!!CAUTION!!!
EXISTING OVERHEAD UTILITIES IN VICINITY. CONTRACTOR SHALL EXERCISE EXTREME CAUTION WHEN WORKING NEAR ELECTRIC FACILITIES.

!!!WARNING!!!
THE ENGINEER ASSUMES NO RESPONSIBILITY FOR THE ACCURACY OF THE LOCATION OF UNDERGROUND UTILITIES. THE CONTRACTOR SHALL BE RESPONSIBLE FOR LOCATION AND AVOIDING ALL EXISTING UTILITIES BY CALLING THE 'ONE CALL' LOCATOR SERVICE AT (800)344-8377 AT LEAST 48 HOURS PRIOR TO CONSTRUCTION.

CP&Y, INC.
TEXAS REGISTERED ENGINEERING FIRM
TBPE F-1741

STATE OF TEXAS
DAVID L. MAREK
#83327
REGISTERED PROFESSIONAL ENGINEER
4-14-2023

NO.	REVISION	BY	DATE

VERIFY SCALE 0 1"
BAR LENGTH EQUALS ONE INCH ON ORIGINAL DRAWING. VERIFY LENGTH ON THIS SHEET AND ADJUST SCALE ACCORDINGLY

CITY OF WACO
WEBSTER AVE EAST CURBLINE IMPROVEMENTS

CROSS SECTIONS
STA. 16+16.50 TO STA. 17+08.15

DESIGN: DLM
DRAWN: ECM
REVIEW: DLM
CP&Y: CWAC2200983
CLIENT:

SHEET
C552

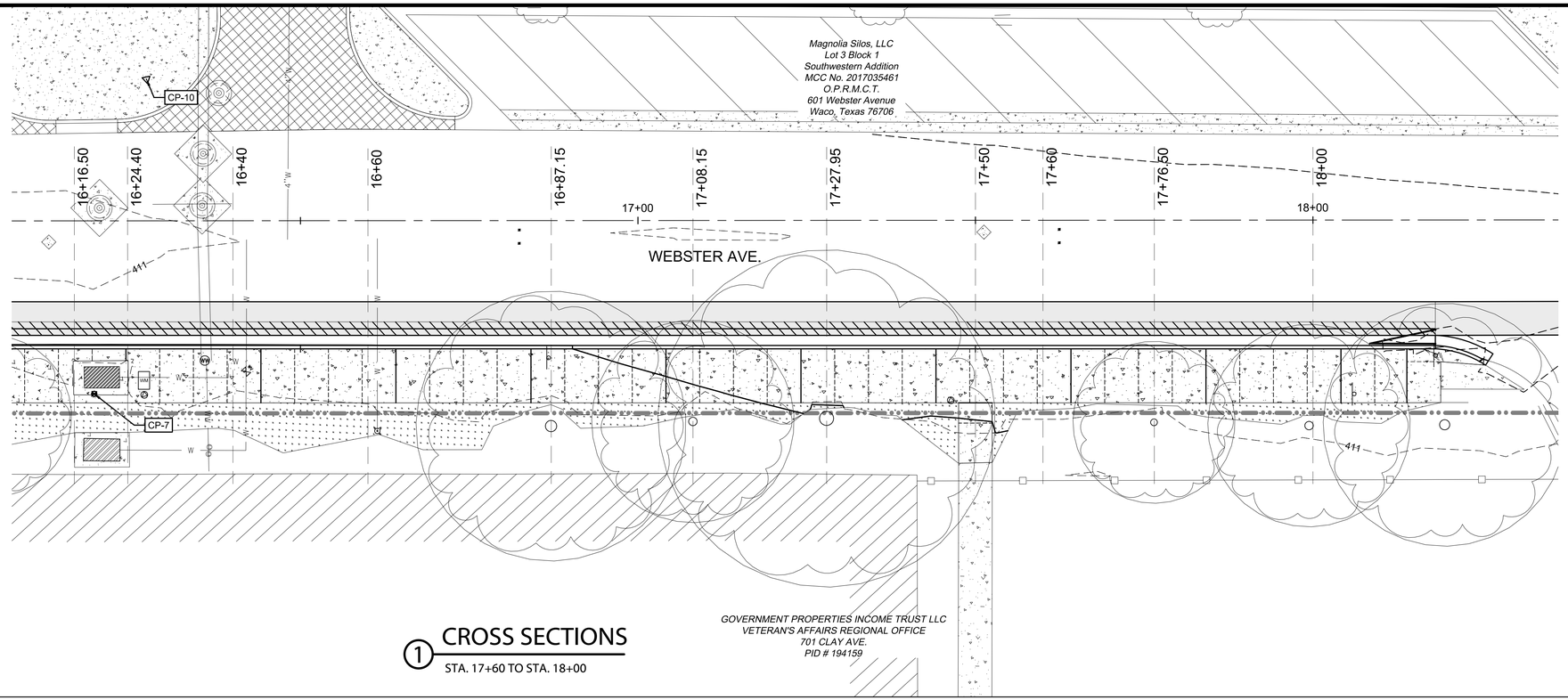

1 CROSS SECTIONS

STA. 17+60 TO STA. 18+00

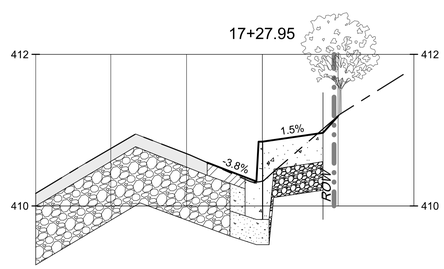

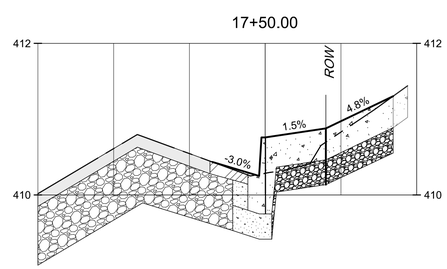

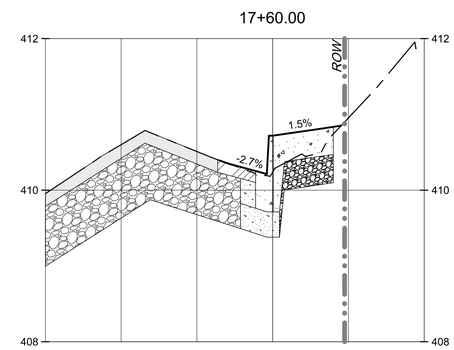

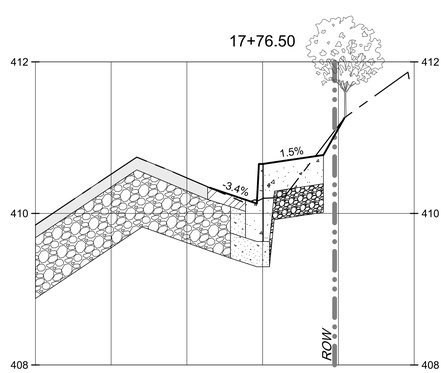

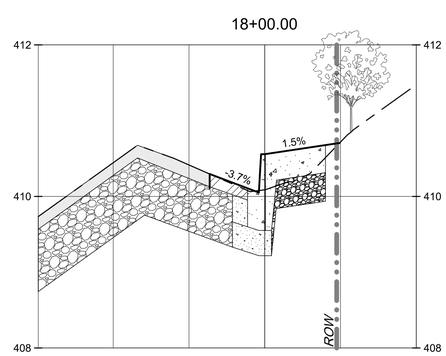

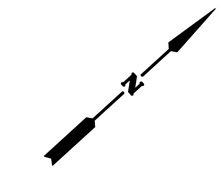

HORZ 0 10 20

VERT 0 1 2

SCALE IN FEET

LEGEND

- EXISTING CONTOURS
- PROPOSED CONTOURS
- EXISTING GRADE
- PROPOSED GRADE
- EXISTING HMAC PAVEMENT
- EXISTING PUG BASE
- PROPOSED HMAC PAVEMENT
- PROPOSED FLEXIBLE BASE
- PROPOSED REINFORCED CONCRETE PAVEMENT
- PROPOSED CEMENT STABILIZED BASE

CAUTION GAS IN AREA

!!!CAUTION!!!
EXISTING OVERHEAD UTILITIES IN VICINITY. CONTRACTOR SHALL EXERCISE EXTREME CAUTION WHEN WORKING NEAR ELECTRIC FACILITIES.

!!!WARNING!!!
THE ENGINEER ASSUMES NO RESPONSIBILITY FOR THE ACCURACY OF THE LOCATION OF UNDERGROUND UTILITIES. THE CONTRACTOR SHALL BE RESPONSIBLE FOR LOCATION AND AVOIDING ALL EXISTING UTILITIES BY CALLING THE 'ONE CALL' LOCATOR SERVICE AT (800)344-8377 AT LEAST 48 HOURS PRIOR TO CONSTRUCTION.

CP&Y, INC.
TEXAS REGISTERED ENGINEERING FIRM
TBPE F-1741

STATE OF TEXAS
DAVID L. MAREK
#83327
REGISTERED
PROFESSIONAL ENGINEER
4-14-2023

NO.	REVISION	BY	DATE

VERIFY SCALE 0 1"
BAR LENGTH EQUALS ONE INCH ON ORIGINAL DRAWING. VERIFY LENGTH ON THIS SHEET AND ADJUST SCALE ACCORDINGLY

CITY OF WACO
WEBSTER AVE EAST CURBLINE IMPROVEMENTS

CROSS SECTIONS
STA. 17+27.95 TO STA. 18+00

DESIGN: DLM
DRAWN: ECM
REVIEW: DLM
CP&Y: CWAC2200983
CLIENT:

SHEET
C553

PRINTED BY: emcdougald DATE: 4/13/2023
FILE PATH: G:\Projects\MSIL2100126 WEBSTER SIDEWALK\DWG\VA CURB DRAWINGS\MSIL2100126-C33-CROSS SECTIONS.dwg, C553
G:\Projects\MSIL2100126 WEBSTER SIDEWALK\DWG\VA CURB DRAWINGS\MSIL2100126-C33-CROSS SECTIONS.dwg, C553, 4/13/2023 9:36:19 AM, 1:1

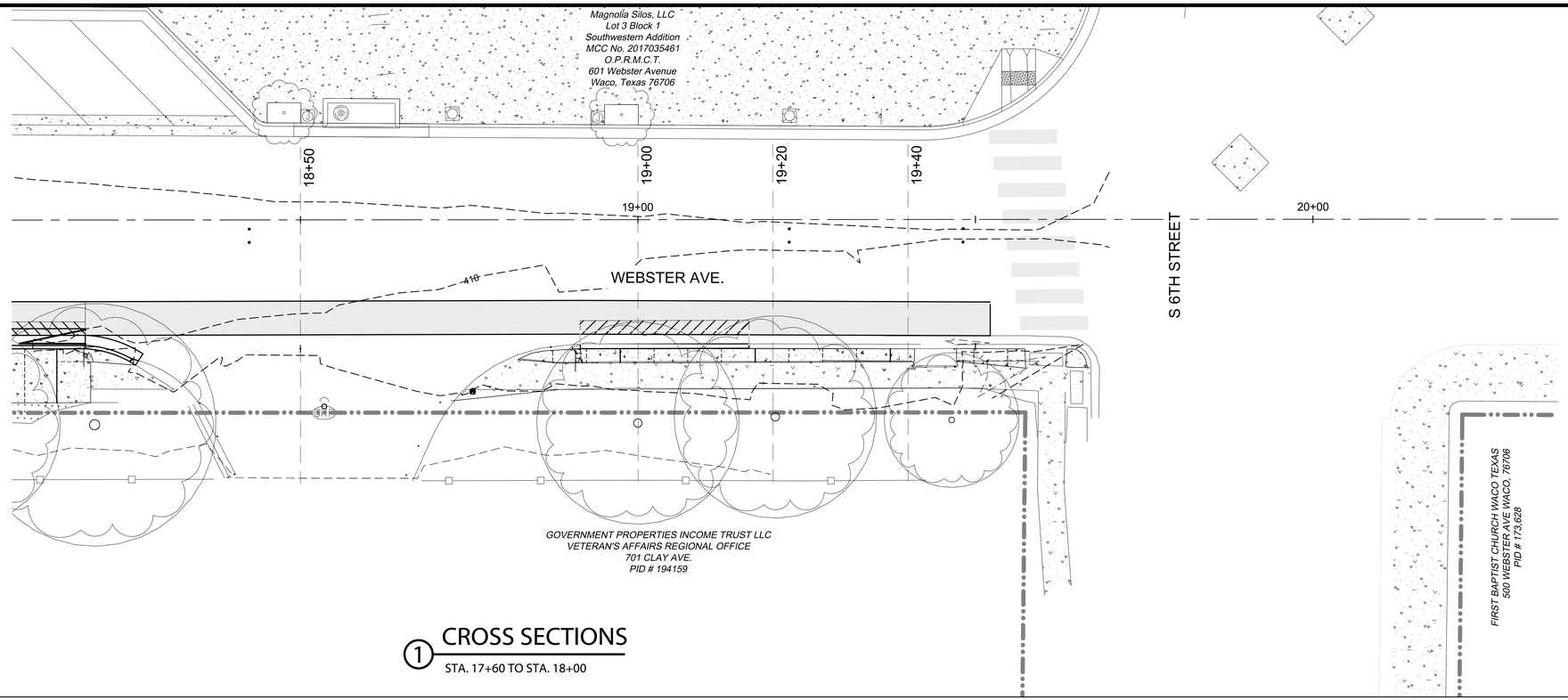

1 CROSS SECTIONS

STA. 17+60 TO STA. 18+00

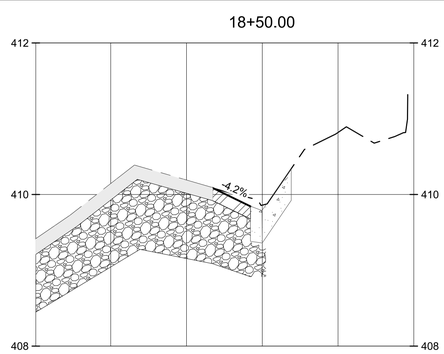

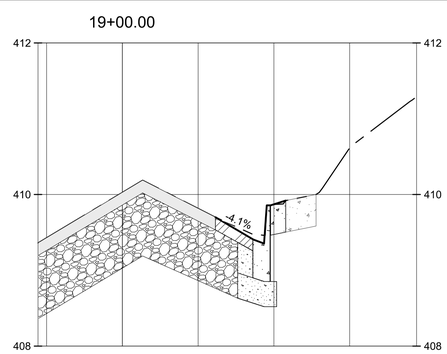

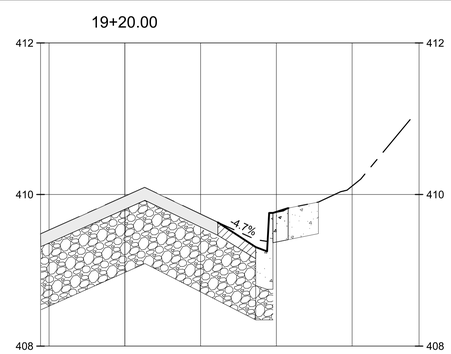

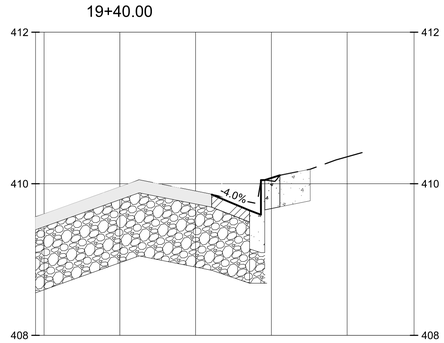

HORZ 0 10 20

VERT 0 1 2

SCALE IN FEET

LEGEND

- EXISTING CONTOURS
- PROPOSED CONTOURS
- EXISTING GRADE
- PROPOSED GRADE
- EXISTING HMAC PAVEMENT
- EXISTING PUG BASE
- PROPOSED HMAC PAVEMENT
- PROPOSED FLEXIBLE BASE
- PROPOSED REINFORCED CONCRETE PAVEMENT
- PROPOSED CEMENT STABILIZED BASE

CAUTION GAS IN AREA

!!!CAUTION!!!
EXISTING OVERHEAD UTILITIES IN VICINITY. CONTRACTOR SHALL EXERCISE EXTREME CAUTION WHEN WORKING NEAR ELECTRIC FACILITIES.

!!!WARNING!!!
THE ENGINEER ASSUMES NO RESPONSIBILITY FOR THE ACCURACY OF THE LOCATION OF UNDERGROUND UTILITIES. THE CONTRACTOR SHALL BE RESPONSIBLE FOR LOCATION AND AVOIDING ALL EXISTING UTILITIES BY CALLING THE 'ONE CALL' LOCATOR SERVICE AT (800)344-8377 AT LEAST 48 HOURS PRIOR TO CONSTRUCTION.

CP&Y, INC.
TEXAS REGISTERED ENGINEERING FIRM
TBPE F-1741

STATE OF TEXAS
DAVID L. MAREK
#83327
REGISTERED
PROFESSIONAL ENGINEER
4-14-2023

NO.	REVISION	BY	DATE

VERIFY SCALE 0 1"
BAR LENGTH EQUALS ONE INCH ON ORIGINAL DRAWING. VERIFY LENGTH ON THIS SHEET AND ADJUST SCALE ACCORDINGLY.

CITY OF WACO
WEBSTER AVE EAST CURBLINE IMPROVEMENTS

CROSS SECTIONS
STA. 18+50 TO STA. 19+40

DESIGN: DLM
DRAWN: ECM
REVIEW: DLM
CP&Y: CWAC2200983
CLIENT:

SHEET
C554

PRINTED BY: emcdougald DATE: 4/13/2023
FILE PATH: G:\Projects\MSIL2100126 WEBSTER SIDEWALK\DWG\VA CURB DRAWINGS\MSIL2100126-C33-CROSS SECTIONS.dwg, C554
G:\Projects\MSIL2100126 WEBSTER SIDEWALK\DWG\VA CURB DRAWINGS\MSIL2100126-C33-CROSS SECTIONS.dwg, C554, 4/13/2023 9:36:24 AM, 1:1

4TH STREET PEDESTRIAN IMPROVEMENTS

BID PROPOSAL
4th Street Pedestrian Improvements

Item No.	Description	Estimate Qty	Unit
BASE BID			
GENERAL CONDITIONS			
1	Mobilization, Permits and Project Incidentals (10% Maximum of Total Bid)	1	LS
2	Bonding and Insurance (2.5% Maximum of Total Bid)	1	LS
3	Stormwater Pollution & Prevention Plan	1	LS
4	Stormwater Pollution & Prevention Plan Implementation	1	LS
5	Traffic Control Plan	1	LS
6	Traffic Control Plan Implementation	1	LS
DEMOLITION IMPROVEMENTS			
7	Existing HMAC & Base Material (All Depths, All Types) to be sawcut, removed and disposed off site, including necessary excavation and/or placement of select fill to achieve design subgrade, and all material, labor, equipment and incidentals complete and in place	113	SY
8	Provide variable depth HMAC Milling and disposal offsite, including all HMAC sawcutting, sweeping, dust control, installation of temporary traffic striping, hauling and disposal of millings, and all material, labor, equipment and incidentals complete and in place	164	SY
9	Existing Concrete Curb to be removed and disposed offsite, including necessary saw cutting, removal transportation and disposal and all material, labor, equipment and incidentals complete and in place	140	LF
9	Existing Reinforced Drive Approach to be removed and disposed offsite, including necessary saw cutting, removal transportation and disposal, necessary excavation and/or placement of select fill to achieve design subgrade, temporary access to businesses, and all material, labor, equipment and incidentals complete and in place	410	SF
10	Existing Reinforced Concrete Sidewalk to be removed and disposed offsite, including necessary saw cutting, removal transportation and disposal, necessary excavation and/or placement of select fill to achieve design subgrade, temporary access to businesses, and all material, labor, equipment and incidentals complete and in place	1200	SF
10	Removal of Existing Water Meter Box (All Sizes, All Types) and Disposal Offsite, and all material, labor, equipment, and incidentals complete and in place	1	EA
11	Existing Signage, Pole and Foundation to be removed, including retainage of sign for reinstallation, storage, transportation, disposal fo pole and foundation in offsite location, and palcement of select fill in excavated area, and all material, labor, equipment and incidentals complete and in place	2	EA

BID PROPOSAL
4th Street Pedestrian Improvements

Item No.	Description	Estimate Qty	Unit
11	Existing Gas Marker and Foundation to be removed, including retainage of gas marker for reinstallation, storage, transportation, disposal of foundation in offsite location, and palcement of select fill in excavated area, and all material, labor, equipment and incidentals complete and in place	1	EA
12	Existing Tree and Rootball to be removed and disposed offsite, including necessary excavation and placement of select fill in excavated area, an dall material, labor, equipment and incidentals complete and in place	6	EA
STREET IMPROVEMENTS			
13	Reinforced Concrete Sidewalk, including all necessary subgrade preparation, base material, formwork, reinforcement, concrete, finishing, connection to existing concrete sidewalk, and all material, labor, equipment and incidentals complete and in place	2216	SF
14	Reinforced Concrete Drive Approach and Apron, including all necessary subgrade preparation, base material, formwork, reinforcement, concrete, finishing, connection to existing concrete sidewalk, and all material, labor, equipment and incidentals complete and in place	282	SF
15	Standard Curb and Gutter including reinforcement, base material, connections to existing curb and gutter, and all material, labor, equipment, and incidentals, complete and in place	210	LF
16	3" Curb and Gutter including reinforcement, base material, connections to existing curb and gutter, and all material, labor, equipment, and incidentals, complete and in place	36	LF
17	Reinforced Concrete Curb Transition, including all necessary subgrade preparation, portland cement treated base material, formwork, reinforcement, concrete, finishing, connection to existing concrete curb & gutter, and all material, labor, equipment and incidentals complete and in place	10	LF
18	Unreinforced Concrete Base, including including all surface preparation, installation, and all material, labor, equipment and incidentals complete and in place	1460	SF
19	Variable Depth HMAC Type "D" including application of TRAIL, including all surface preparation, installation, necessary temporary traffic striping, and all material, labor, equipment and incidentals complete and in place	1460	SY
20	2" HMAC Type "D" including bonding course, installation, necessary temporary traffic striping, and all material, labor, equipment and incidentals complete and in place	583	SY
21	Class "A" Surface Replacement, including all material, labor, equipment and incidentals complete and in place	30	LF

BID PROPOSAL
4th Street Pedestrian Improvements

Item No.	Description	Estimate Qty	Unit
22	Installation of Water Meter Box, including all material, labor, equipment and incidentals complete and in place	1	EA
23	Installation of Signage Pole and Foundation, including installation of retained signage, and all material, labor, equipment and incidentals complete and in place	2	EA
24	Installation of Gas Marker and Foundation, including installation of retained gas marker, and all material, labor, equipment and incidentals complete and in place	1	EA
25	2" Irrigation Service, including necessary excavation, embedment, gravel trench backfill, installation of meter box, installation of new irrigation meter and connection to existing service, and all material, labor, equipment and incidentals complete and in place	1	EA
26	Landscaping Improvements, including all necessary conduits, controller, support, controls, electrical connection, wirings, and all material, labor, equipment and incidentals complete and in place	1	LS
27	Tree Well, including all necessary subgrade preparation, root barriers, formwork, reinforcement, concrete, finishing, and all material, labor, equipment and incidentals complete and in place	6	EA
28	Landscaping Improvements, including all necessary trees, tree support, temporary watering, mulching, fertilizer, and all material, labor, equipment and incidentals complete and in place	1	LS
29	Reflective Pavement Marking Type 1, Color: White, Width: 4", solid, 100 mil., including all necessary surface preparation, removal of temporary striping, and all material, labor, equipment and incidentals complete and in place	270	LF
30	Reflective Pavement Marking Type 1, Color: White, Width: 4", solid, 100 mil. (NO PARKING AREAS), including all necessary surface preparation, removal of temporary striping, and all material, labor, equipment and incidentals complete and in place	75	LF
31	Reflective Pavement Marking Type 1, Color: White, Width: 24", solid, 100 mil., including all necessary surface preparation, removal of temporary striping, and all material, labor, equipment and incidentals complete and in place	20	LF
32	Installation of Select Fill and Reclaimed of Imported Top Soil, and all material, labor, equipment and incedentals complete and in place	100	SY
33	Installation of Solid Block Sod, including scarifying existing ground, watering as needed, and all material, labor, equipment and incentals complete and in place	100	SY
ELECTRICAL & LIGHTING IMPROVEMENTS			
34	Electrical & Lighting Improvements, including all wiring, conduits, bores, light poles, reinforced concrete bases, pull boxes, electrical panels, coordination with Oncor, and all material, labor, equipment and incidentals, complete and in place	1	LS

CP&Y, INC.
TEXAS REGISTERED ENGINEERING FIRM
TBPE F-1741

STATE OF TEXAS
DAVID L. MAREK
#83327
REGISTERED
PROFESSIONAL ENGINEER
4-14-2023

NO.	REVISION	BY	DATE

VERIFY SCALE 0 1"
BAR LENGTH EQUALS ONE INCH ON ORIGINAL DRAWING. VERIFY LENGTH ON THIS SHEET AND ADJUST SCALE ACCORDINGLY.

CITY OF WACO
4TH STREET PEDESTRIAN IMPROVEMENTS

SUMMARY OF QUANTITIES

DESIGN: DLM
DRAWN: ECM
REVIEW: DLM
CP&Y: CWAC2300244
CLIENT:

SHEET
C600

PRINTED BY: emcdougald DATE: 4/14/2023
FILE PATH: G:\Projects\CWAC2300244 - 4th St Pedestrian Improvements\08_Plans_Drawings\20_Sheets\CWAC2300244-C20-SURV.dwg, C600

G:\Projects\CWAC2300244 - 4th St Pedestrian Improvements\08_Plans_Drawings\20_Sheets\CWAC2300244-C20-SURV.dwg, C600, 4/14/2023 3:27:19 PM, 1:1

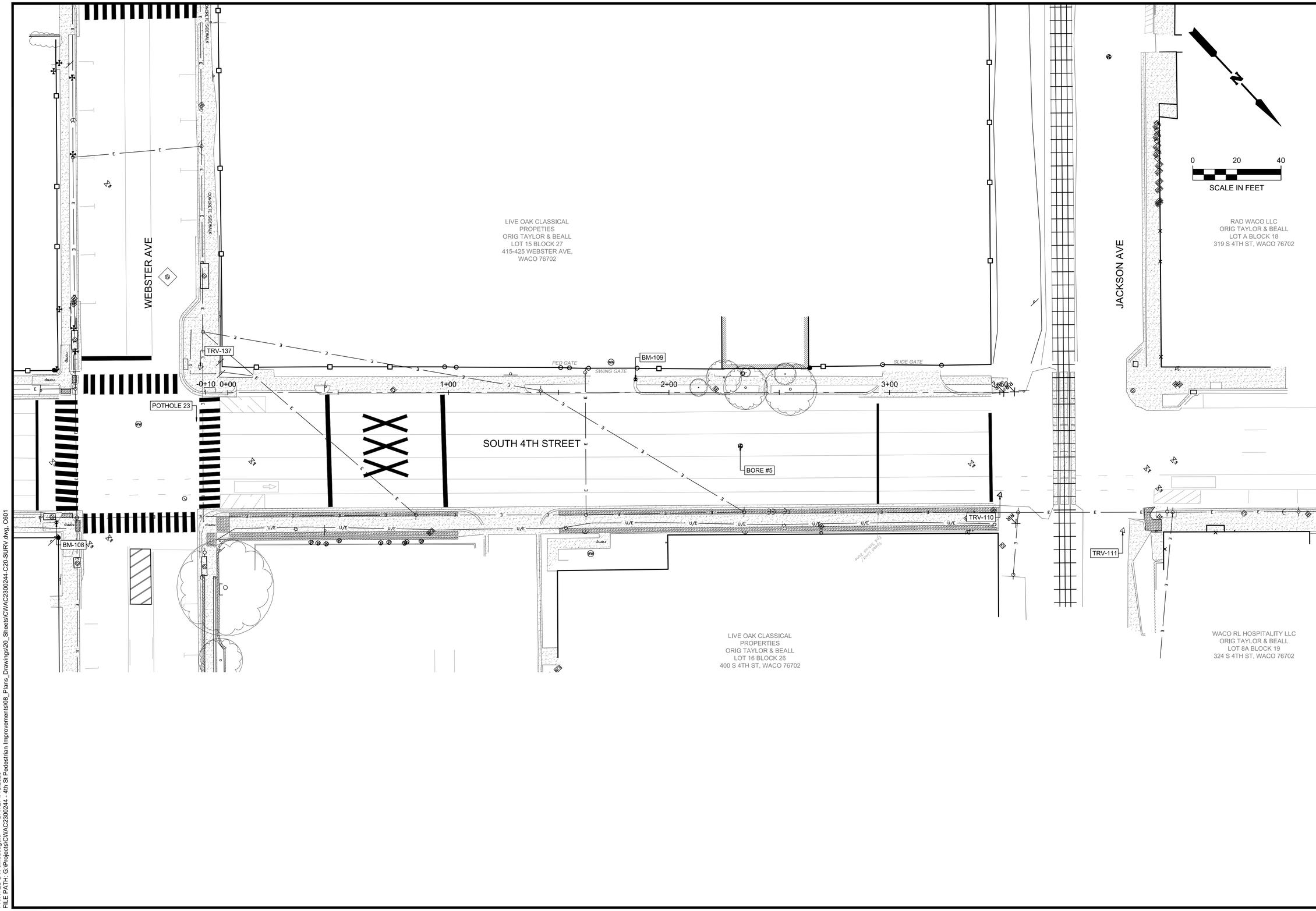

CP&Y, INC.
TEXAS REGISTERED ENGINEERING FIRM
TBPE F-1741

STATE OF TEXAS
DAVID L. MAREK
#83327
REGISTERED
PROFESSIONAL ENGINEER

4-14-2023

NO.	REVISION	BY	DATE

VERIFY SCALE
1"
0

BAR LENGTH EQUALS ONE INCH ON ORIGINAL DRAWING. VERIFY LENGTH ON THIS SHEET AND ADJUST SCALE ACCORDINGLY

CITY OF WACO
4TH STREET PEDESTRIAN IMPROVEMENTS

EXISTING SURVEY

DESIGN: DLM
DRAWN: ECM
REVIEW: DLM
CP&Y: CWAC2300244
CLIENT:

SHEET
C601

PRINTED BY: emcdougald DATE: 4/13/2023
FILE PATH: G:\Projects\CWAC2300244 - 4th St Pedestrian Improvements\08_Plans_Drawings\20_Sheets\CWAC2300244-C20-SURV.dwg, C601

G:\Projects\CWAC2300244 - 4th St Pedestrian Improvements\08_Plans_Drawings\20_Sheets\CWAC2300244-C20-SURV.dwg, C601, 4/14/2023 2:03:33 PM, 1:1

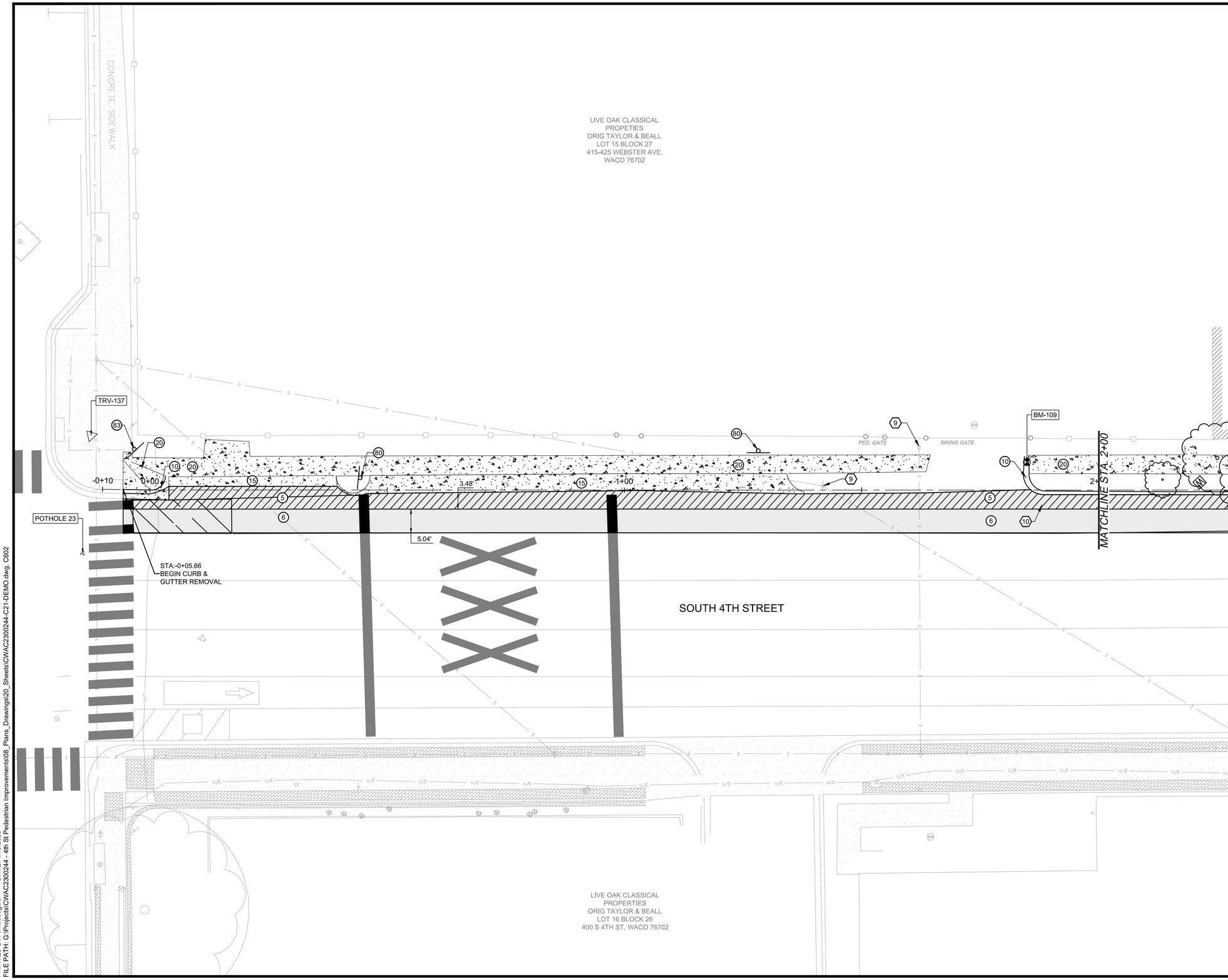

0 10 20

SCALE IN FEET

DEMOLITION CALLOUTS

(5) HMAC & BASE (ALL DEPTHS) TO BE SAWCUT, REMOVED, & DISPOSED OFF-SITE. CONTRACTOR TO PROVIDE NECESSARY EXCAVATION AND/OR FILL TO OBTAIN DESIGN SUBGRADE. COST TO BE SUBSIDIARY TO BID ITEM

(6) HMAC TO BE MILLED (VARIABLE DEPTH)(SEE CROSS SECTIONS). CONTRACTOR TO DISPOSE OF MILLINGS IN OFF-SITE LOCATION

(10) CONCRETE CURB OR CURB & GUTTER (ALL TYPES) TO BE SAWCUT, REMOVED & DISPOSED OFF-SITE. CONTRACTOR TO REMOVE HMAC & BASE NECESSARY FOR CURB & GUTTER CONSTRUCTION.

(15) REINFORCED CONCRETE DRIVE APPROACH TO BE SAWCUT, REMOVED & DISPOSED OFF-SITE. CONTRACTOR TO PROVIDE NECESSARY EXCAVATION AND/OR PLACEMENT OF SELECT FILL TO OBTAIN DESIGN SUBGRADE. COST SHALL BE SUBSIDIARY TO REMOVAL BID ITEM.

(20) REINFORCED CONCRETE SIDEWALK TO BE SAWCUT, REMOVED & DISPOSED OFF-SITE. CONTRACTOR TO PROVIDE NECESSARY EXCAVATION AND/OR PLACEMENT OF SELECT FILL TO OBTAIN DESIGN SUBGRADE. COST SHALL BE SUBSIDIARY TO REMOVAL BID ITEM

(80) EXISTING SIGN, POLE & FOUNDATION TO BE REMOVED. RETAIN SIGN FOR REINSTALLATION. POLE & FOUNDATION TO BE DISPOSED OFFSITE IN APPROVED LOCATION. INSTALL SELECT FILL IN EXCAVATED VOID. COST OF FILL INSTALLATION TO BE INCIDENTAL TO ITEM OF WORK

(83) EXISTING GAS MARKER TO BE REMOVED BY UTILITY PROVIDER

SPECIAL PROJECT NOTES

(9) EXISTING POWER POLE TO REMAIN. CONTRACTOR TO NOTIFY POLE OWNER A MINIMUM OF 48 HOURS IN ADVANCE OF CONSTRUCTION

(10) EXISTING CURB CONTAINS GUTTER PAN. CONTRACTOR TO ANTICIPATE THIS FACT IN REMOVAL OF CURB

(11) CONTRACTOR TO CONTACT OWNER A MINIMUM OF 48 HOURS PRIOR TO DEMOLITION ACTIVITY OCCURRING. ANY DAMAGE TO SPRINKLER SYSTEM WILL BE REPAIRED TO EXISTING OR BETTER CONDITIONS AT NO ADDITIONAL COST TO THE OWNER.

CAUTION
GAS IN AREA

!!!CAUTION!!!
EXISTING OVERHEAD UTILITIES IN VICINITY. CONTRACTOR SHALL EXERCISE EXTREME CAUTION WHEN WORKING NEAR ELECTRIC FACILITIES.

!!!WARNING!!!
THE ENGINEER ASSUMES NO RESPONSIBILITY FOR THE ACCURACY OF THE LOCATION OF UNDERGROUND UTILITIES. THE CONTRACTOR SHALL BE RESPONSIBLE FOR LOCATION AND AVOIDING ALL EXISTING UTILITIES BY CALLING THE 'ONE CALL' LOCATOR SERVICE AT (800)344-8377 AT LEAST 48 HOURS PRIOR TO CONSTRUCTION.

CP&Y, INC.
TEXAS REGISTERED ENGINEERING FIRM
TBPE F-1741

STATE OF TEXAS
DAVID L. MAREK
#83327
REGISTERED
PROFESSIONAL ENGINEER
4-14-2023

NO.	REVISION	BY	DATE

VERIFY SCALE 0 1"
BAR LENGTH EQUALS ONE INCH ON ORIGINAL DRAWING. VERIFY LENGTH ON THIS SHEET AND ADJUST SCALE ACCORDINGLY

CITY OF WACO
4TH STREET PEDESTRIAN IMPROVEMENTS

DEMOLITION PLAN
STA. 0+00 TO STA. 2+00

DESIGN: DLM
DRAWN: ECM
REVIEW: DLM
CP&Y: CWAC2300244
CLIENT:

SHEET
C602

PRINTED BY: emcdougald DATE: 4/13/2023
FILE PATH: G:\Projects\CWAC2300244 - 4th St Pedestrian Improvements\08_Plans_Drawings\20_Sheets\CWAC2300244-C21-DEMO.dwg, C602

G:\Projects\CWAC2300244 - 4th St Pedestrian Improvements\08_Plans_Drawings\20_Sheets\CWAC2300244-C21-DEMO.dwg, C602, 4/14/2023 2:02:46 PM, 1:1

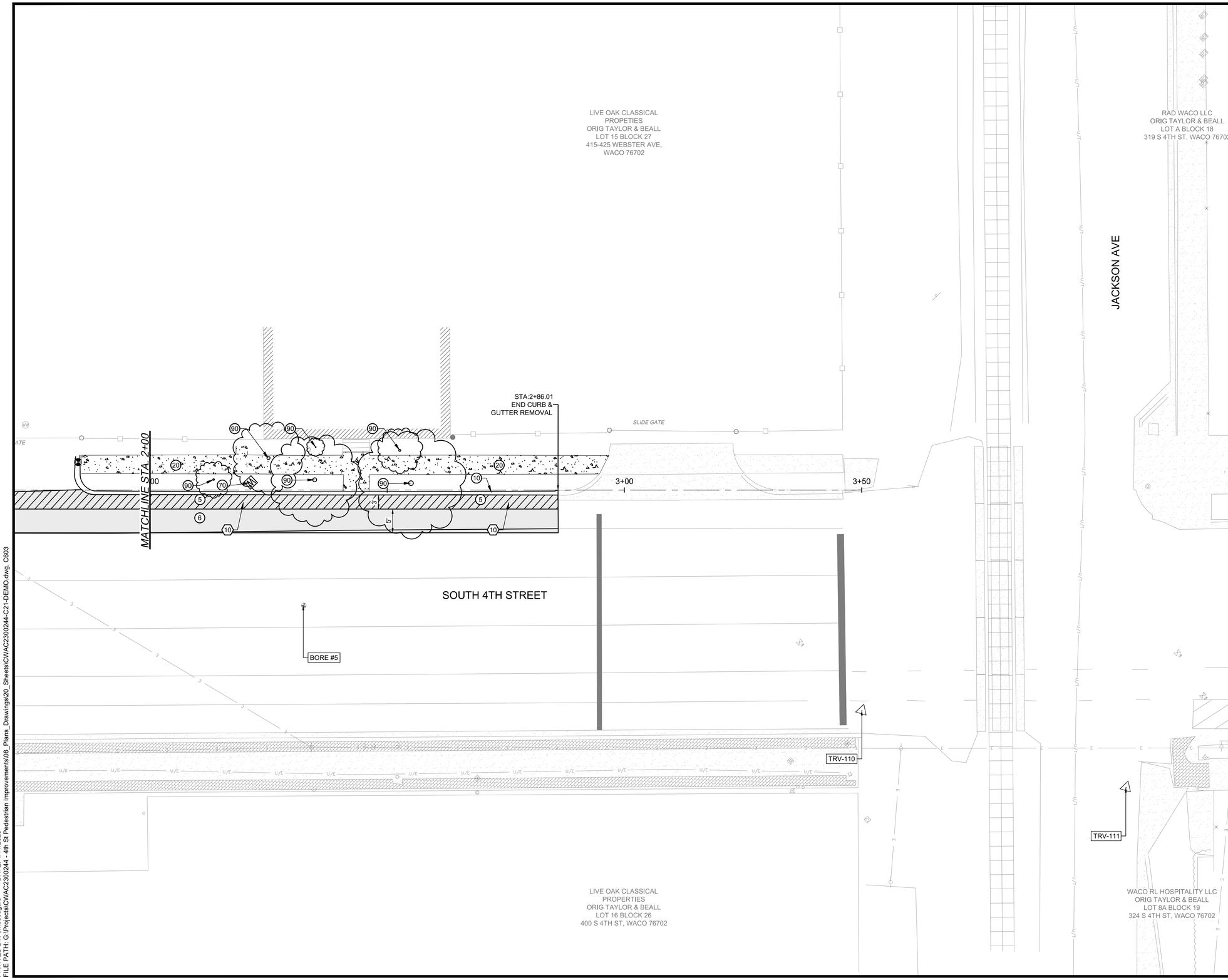

0 10 20
SCALE IN FEET

DEMOLITION CALLOUTS

(5) HMAC & BASE (ALL DEPTHS) TO BE SAWCUT, REMOVED, & DISPOSED OFF-SITE. CONTRACTOR TO PROVIDE NECESSARY EXCAVATION AND/OR FILL TO OBTAIN DESIGN SUBGRADE. COST TO BE SUBSIDIARY TO BID ITEM

(6) HMAC TO BE MILLED (VARIABLE DEPTH)(SEE CROSS SECTIONS). CONTRACTOR TO DISPOSE OF MILLINGS IN OFF-SITE LOCATION

(10) REINFORCED CONCRETE CURB (ALL TYPES) TO BE SAWCUT, REMOVED & DISPOSED OFF-SITE. CONTRACTOR TO REMOVE HMAC & BASE NECESSARY FOR CURB CONSTRUCTION.

(20) REINFORCED CONCRETE SIDEWALK TO BE SAWCUT, REMOVED & DISPOSED OFF-SITE. CONTRACTOR TO PROVIDE NECESSARY EXCAVATION AND/OR PLACEMENT OF SELECT FILL TO OBTAIN DESIGN SUBGRADE. COST SHALL BE SUBSIDIARY TO REMOVAL BID ITEM

(70) EXISTING WATER METER BOX TO BE REMOVED & DISPOSED OFF-SITE

(90) TREE & ROOTBALL TO BE REMOVED & DISPOSED OFF-SITE. INSTALL SELECT FILL IN EXCAVATED AREA. COST TO BE SUBSIDIARY TO BID ITEM.

SPECIAL PROJECT NOTES

(10) EXISTING CURB CONTAINS GUTTER PAN. CONTRACTOR TO ANTICIPATE THIS FACT IN REMOVAL OF CURB

(11) CONTRACTOR TO CONTACT OWNER A MINIMUM OF 48 HOURS PRIOR TO DEMOLITION ACTIVITY OCCURRING. ANY DAMAGE TO SPRINKLER SYSTEM WILL BE REPAIRED TO EXISTING OR BETTER CONDITIONS AT NO ADDITIONAL COST TO THE OWNER.

CAUTION
GAS IN AREA

!!!CAUTION!!!
EXISTING OVERHEAD UTILITIES IN VICINITY. CONTRACTOR SHALL EXERCISE EXTREME CAUTION WHEN WORKING NEAR ELECTRIC FACILITIES.

!!!WARNING!!!
THE ENGINEER ASSUMES NO RESPONSIBILITY FOR THE ACCURACY OF THE LOCATION OF UNDERGROUND UTILITIES. THE CONTRACTOR SHALL BE RESPONSIBLE FOR LOCATION AND AVOIDING ALL EXISTING UTILITIES BY CALLING THE 'ONE CALL' LOCATOR SERVICE AT (800)344-8377 AT LEAST 48 HOURS PRIOR TO CONSTRUCTION.

CP&Y, INC.
TEXAS REGISTERED ENGINEERING FIRM
TBPE F-1741

STATE OF TEXAS
DAVID L. MAREK
#83327
REGISTERED
PROFESSIONAL ENGINEER
4-14-2023

NO.	REVISION	BY	DATE

VERIFY SCALE 1" 0
BAR LENGTH EQUALS ONE INCH ON ORIGINAL DRAWING. VERIFY LENGTH ON THIS SHEET AND ADJUST SCALE ACCORDINGLY

CITY OF WACO
4TH STREET PEDESTRIAN IMPROVEMENTS

DEMOLITION PLAN
STA. 2+00 TO END

DESIGN: DLM
DRAWN: ECM
REVIEW: DLM
CP&Y: CWAC2300244
CLIENT:

SHEET
C603

PRINTED BY: emcdougald DATE: 4/11/2023
FILE PATH: G:\Projects\CWAC2300244 - 4th St Pedestrian Improvements\08_Plans_Drawings\20_Sheets\CWAC2300244-C21-DEMO.dwg, C603
G:\Projects\CWAC2300244 - 4th St Pedestrian Improvements\08_Plans_Drawings\20_Sheets\CWAC2300244-C21-DEMO.dwg, C603, 4/12/2023 1:34:05 PM, 1:1

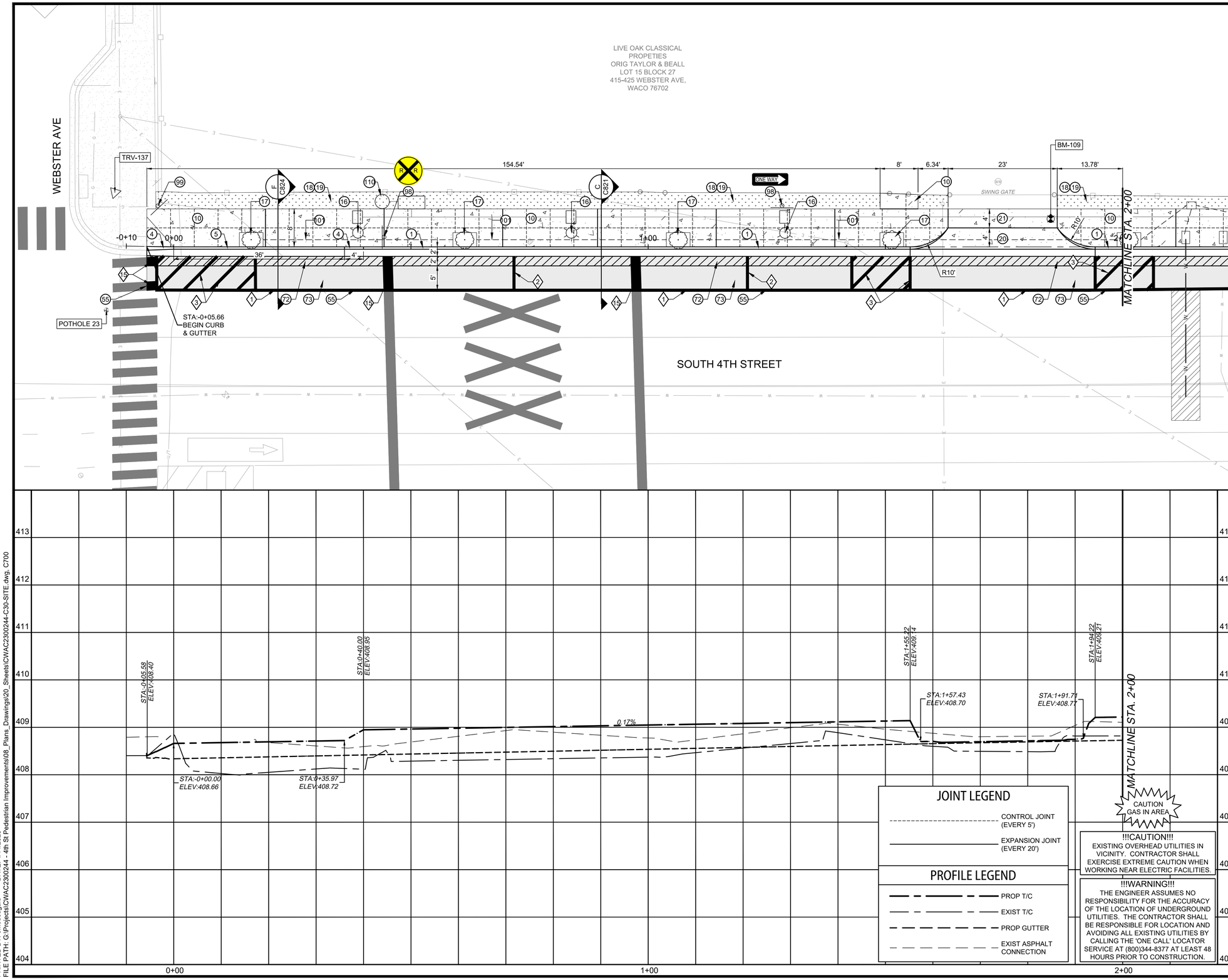

JOINT LEGEND

- CONTROL JOINT (EVERY 5')
- EXPANSION JOINT (EVERY 20')

PROFILE LEGEND

- PROP T/C
- EXIST T/C
- PROP GUTTER
- EXIST ASPHALT CONNECTION

!!!CAUTION!!!
EXISTING OVERHEAD UTILITIES IN VICINITY. CONTRACTOR SHALL EXERCISE EXTREME CAUTION WHEN WORKING NEAR ELECTRIC FACILITIES.

!!!WARNING!!!
THE ENGINEER ASSUMES NO RESPONSIBILITY FOR THE ACCURACY OF THE LOCATION OF UNDERGROUND UTILITIES. THE CONTRACTOR SHALL BE RESPONSIBLE FOR LOCATION AND AVOIDING ALL EXISTING UTILITIES BY CALLING THE 'ONE CALL' LOCATOR SERVICE AT (800)344-8377 AT LEAST 48 HOURS PRIOR TO CONSTRUCTION.

HORZ 0 10 20
VERT 0 1 2
SCALE IN FEET

SITE CALLOUTS

1. REINFORCED CONCRETE STANDARD CURB & GUTTER PER C.O.W. STANDARDS
4. CURB TRANSITION
5. REINFORCED CONCRETE 3" CURB & GUTTER
10. REINFORCED CONCRETE SIDEWALK PER C.O.W. STD DETAILS, INCLUDING VARIABLE HEIGHT CURB
    MIN. CROSS SLOPE: 1%
    MAX CROSS SLOPE: 2%
    VERTICAL DIFFERENCE AT ALL THRESHOLDS TO BE 1/4" MAXIMUM
16. ANTIQUE STREET LIGHT. SEE ELECTRICAL PLANS
17. 5' X 3' TREE WELL W/ ROOT BARRIER PER C.O.W. G-3. INSTALL TREES FROM THE FOLLOWING APPROVED LIST:
    - CHINESE PISTACHE
    - ALLEE ELMS
    - SWEET GUMS
    - CHINKAPIN OAKS

    MIN TRUNK SIZE: 2 $\frac{1}{2}$"Ø
    INSTALL TWO OF ONE VARIETY & ONE OF THE REMAINING LIST. CITY OF WACO TO APPROVE SELECTION VARIETY AND QUANTITY. DWARF SPECIES MAY BE UTILIZED
18. SOLID BLOCK SOD. VARIETY TO MATCH EXISTING VARIETY. SCARIFY EXISTING GROUND PRIOR TO PLACEMENT. PROVIDE WATERING AS NEEDED TO ESTABLISH SOD AT NO ADDITIONAL COST TO OWNER
19. SELECT FILL TO WITHIN 8" OF FINAL GRADE. INSTALL 4" OF RECLAIMED OR IMPORTED TOPSOIL ON SELECT FILL
20. REINFORCED CONCRETE DRIVE APPROACH PER C.O.W. DETAIL ST-24A & ST24-B.
21. REINFORCED CONCRETE DRIVE APRON PER C.O.W. DETAIL ST-24A.
55. CRACKSEAL NEW ASPHALT EDGES WITH CRAFCO POLYFLEX TYPE 3 OR APPROVED EQUAL
72. 2" HMAC TYPE 'C' & 2000 PSI CONCRETE BASE PER C.O.W. DETAIL ST-20
73. VARIABLE THICKNESS HMAC OVERLAY, TxDOT ITEM 340, TYPE 'C'. INCLUDING TRAIL, HOT APPLIED
98. INSTALL NEW POLE & FOUNDATION PER C.O.W. DETAIL T-6. REATTACH RETAINED SIGNAGE. IF DAMAGED, CONTRACTOR TO REPLACE SIGN AT NO ADDITIONAL COST TO OWNER.
99. GAS MARKER TO BE REINSTALLED BY UTILITY PROVIDER
101. 2-2" SCH-40 PVC IRRIGATION SLEEVE
110. NEW UTILITY POLE. RE: ELECTRICAL PLANS

STRIPING CALLOUTS

1. REFL PAV MRK TY 1 (W) 4" (SLD) (100 MIL)
2. REFL PAV MRK TY 1 (W) 4" (SLD) (100 MIL) (PARKING STALLS)
3. "NO PARKING" REFL PAV MRK TY 1 (W) 4" (SLD) (100 MIL)
15. REFL PAV MRK TY 1 (W) 24" (SLD) (100 MIL)

CP&Y, INC.
TEXAS REGISTERED ENGINEERING FIRM
TBPE F-1741

STATE OF TEXAS
DAVID L. MAREK
#83327
REGISTERED
PROFESSIONAL ENGINEER
4-14-2023

NO.	REVISION	BY	DATE

VERIFY SCALE 0 1"
BAR LENGTH EQUALS ONE INCH ON ORIGINAL DRAWING. VERIFY LENGTH ON THIS SHEET AND ADJUST SCALE ACCORDINGLY

CITY OF WACO
4TH STREET PEDESTRIAN IMPROVEMENTS

STREET SCAPING IMPROVEMENTS
STA. 0+00 TO STA. 2+00

DESIGN: DLM
DRAWN: ECM
REVIEW: DLM
CP&Y: CWAC2300244
CLIENT:

SHEET
C700

PRINTED BY: emcdougald DATE: 4/14/2023
FILE PATH: G:\Projects\CWAC2300244 - 4th St Pedestrian Improvements\08_Plans_Drawings\20_Sheets\CWAC2300244-C30-SITE.dwg, C700

G:\Projects\CWAC2300244 - 4th St Pedestrian Improvements\08_Plans_Drawings\20_Sheets\CWAC2300244-C30-SITE.dwg, C700, 4/14/2023 3:22:21 PM, 1:1

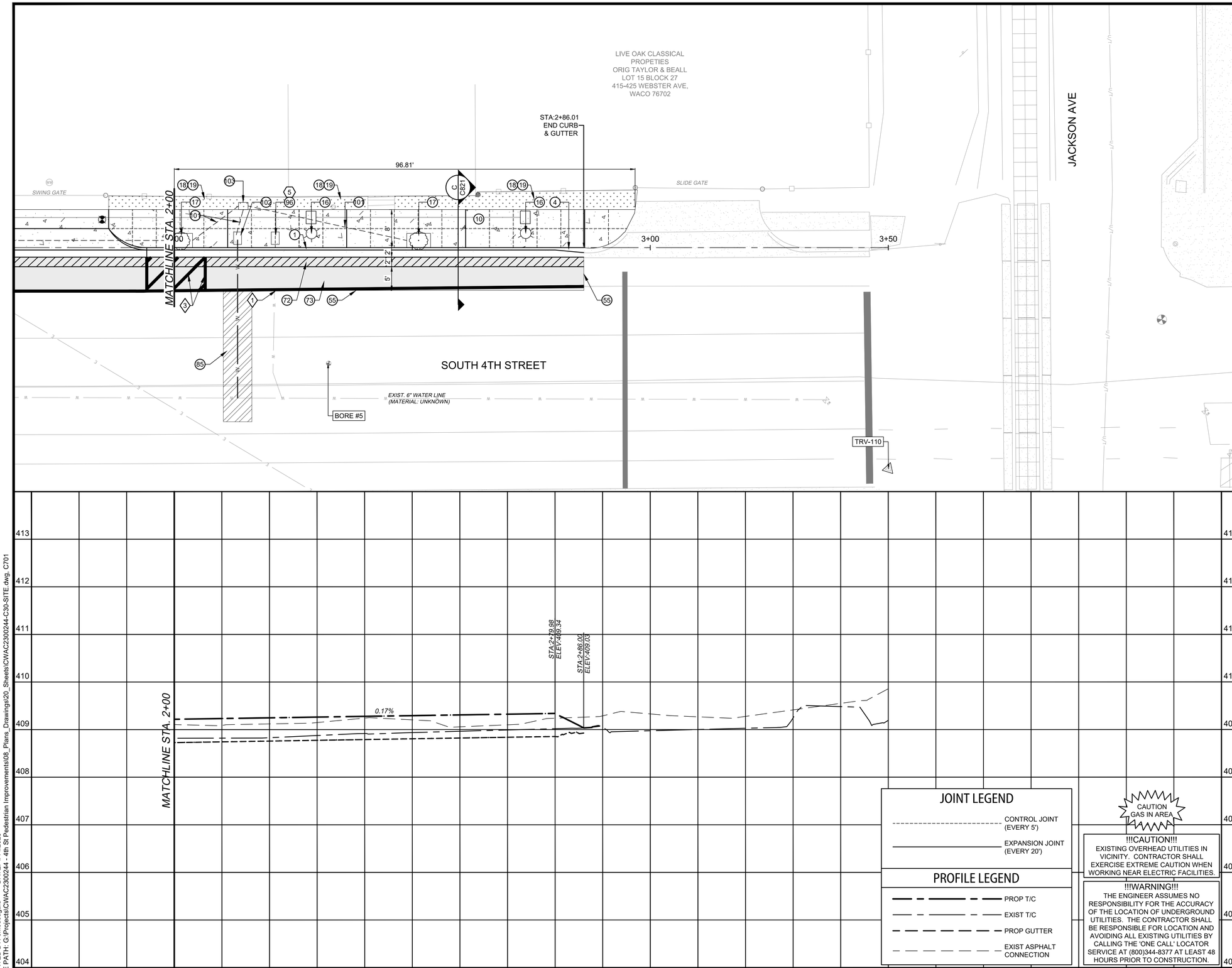

HORZ 0 10 20
VERT 0 1 2
SCALE IN FEET

SITE CALLOUTS

1. REINFORCED CONCRETE STANDARD CURB & GUTTER PER C.O.W. STANDARDS
4. CURB TRANSITION
10. REINFORCED CONCRETE SIDEWALK PER C.O.W. STD DETAILS, INCLUDING VARIABLE HEIGHT CURB
MIN. CROSS SLOPE: 1%
MAX CROSS SLOPE: 2%
VERTICAL DIFFERENCE AT ALL THRESHOLDS TO BE 1/4" MAXIMUM
16. ANTIQUE STREET LIGHT. SEE ELECTRICAL PLANS
17. 5' X 3' TREE WELL W/ ROOT BARRIER PER C.O.W. G-3. INSTALL TREES FROM THE FOLLOWING APPROVED LIST:
   - CHINESE PISTACHE
   - ALLEE ELMS
   - SWEET GUMS
   - CHINKAPIN OAKS

   MIN TRUNK SIZE: 2 $\frac{1}{2}$"Ø
   INSTALL TWO OF ONE VARIETY & ONE OF THE REMAINING LIST. CITY OF WACO TO APPROVE SELECTION VARIETY AND QUANTITY. DWARF SPECIES MAY BE UTILIZED
18. SOLID BLOCK SOD. VARIETY TO MATCH EXISTING VARIETY. SCARIFY EXISTING GROUND PRIOR TO PLACEMENT. PROVIDE WATERING AS NEEDED TO ESTABLISH SOD AT NO ADDITIONAL COST TO OWNER
19. SELECT FILL TO WITHIN 8" OF FINAL GRADE. INSTALL 4" OF RECLAIMED OR IMPORTED TOPSOIL ON SELECT FILL
55. CRACKSEAL NEW ASPHALT EDGES WITH CRAFCO POLYFLEX TYPE 3 OR APPROVED EQUAL
72. 2" HMAC TYPE 'C' & 2000 PSI CONCRETE BASE PER C.O.W. DETAIL ST-20
73. VARIABLE THICKNESS HMAC OVERLAY, TxDOT ITEM 340, TYPE 'C'. INCLUDING TRAIL, HOT APPLIED
85. CLASS 'A' SURFACE REPLACEMENT
96. INSTALL NEW WATER METER BOX, FLUSH WITH FINAL SIDEWALK GRADE & ELEVATION PER CITY OF WACO DETAIL W-17 OR W-18. RELOCATE EXISTING METER & CONNECT TO EXISTING SERVICE
101. 2-2" SCH-40 PVC IRRIGATION SLEEVE
102. 2" IRRIGATION SERVICE W/ 1-1/2" METER
103. IRRIGATION CONTROLLER INSTALLED IN ALL WEATHER ENCLOSURE

STRIPING CALLOUTS

1. REFL PAV MRK TY 1 (W) 4" (SLD) (100 MIL)
3. "NO PARKING" REFL PAV MRK TY 1 (W) 4" (SLD) (100 MIL)

SPECIAL PROJECT NOTES

5. CONTRACTOR TO NOTIFY PROPERTY OWNERS A MINIMUM OF 72 HOURS PRIOR TO INTERRUPTION OF WATER SERVICE. IF WORK IS TO OCCUR AFTER HOURS OR AT NIGHT, ANY ADDITIONAL COSTS SHALL BE INCIDENTAL TO ITEM OF WORK

JOINT LEGEND

- CONTROL JOINT (EVERY 5')
- EXPANSION JOINT (EVERY 20')

PROFILE LEGEND

- PROP T/C
- EXIST T/C
- PROP GUTTER
- EXIST ASPHALT CONNECTION

CAUTION
GAS IN AREA

!!!CAUTION!!!
EXISTING OVERHEAD UTILITIES IN VICINITY. CONTRACTOR SHALL EXERCISE EXTREME CAUTION WHEN WORKING NEAR ELECTRIC FACILITIES.

!!!WARNING!!!
THE ENGINEER ASSUMES NO RESPONSIBILITY FOR THE ACCURACY OF THE LOCATION OF UNDERGROUND UTILITIES. THE CONTRACTOR SHALL BE RESPONSIBLE FOR LOCATION AND AVOIDING ALL EXISTING UTILITIES BY CALLING THE 'ONE CALL' LOCATOR SERVICE AT (800)344-8377 AT LEAST 48 HOURS PRIOR TO CONSTRUCTION.

CP&Y, INC.
TEXAS REGISTERED ENGINEERING FIRM
TBPE F-1741

STATE OF TEXAS
DAVID L. MAREK
#83327
REGISTERED
PROFESSIONAL ENGINEER
4-14-2023

NO.	REVISION	BY	DATE

VERIFY SCALE 1" 0
BAR LENGTH EQUALS ONE INCH ON ORIGINAL DRAWING. VERIFY LENGTH ON THIS SHEET AND ADJUST SCALE ACCORDINGLY

CITY OF WACO
4TH STREET PEDESTRIAN IMPROVEMENTS

STREET SCAPING IMPROVEMENTS
STA. 2+00 TO END

DESIGN: DLM
DRAWN: ECM
REVIEW: DLM
CP&Y: CWAC2300244
CLIENT:

SHEET
C701

PRINTED BY: emcdougald DATE: 4/14/2023
FILE PATH: G:\Projects\CWAC2300244 - 4th St Pedestrian Improvements\08_Plans_Drawings\20_Sheets\CWAC2300244-C30-SITE.dwg, C701

G:\Projects\CWAC2300244 - 4th St Pedestrian Improvements\08_Plans_Drawings\20_Sheets\CWAC2300244-C30-SITE.dwg, C701, 4/14/2023 3:22:46 PM, 1:1

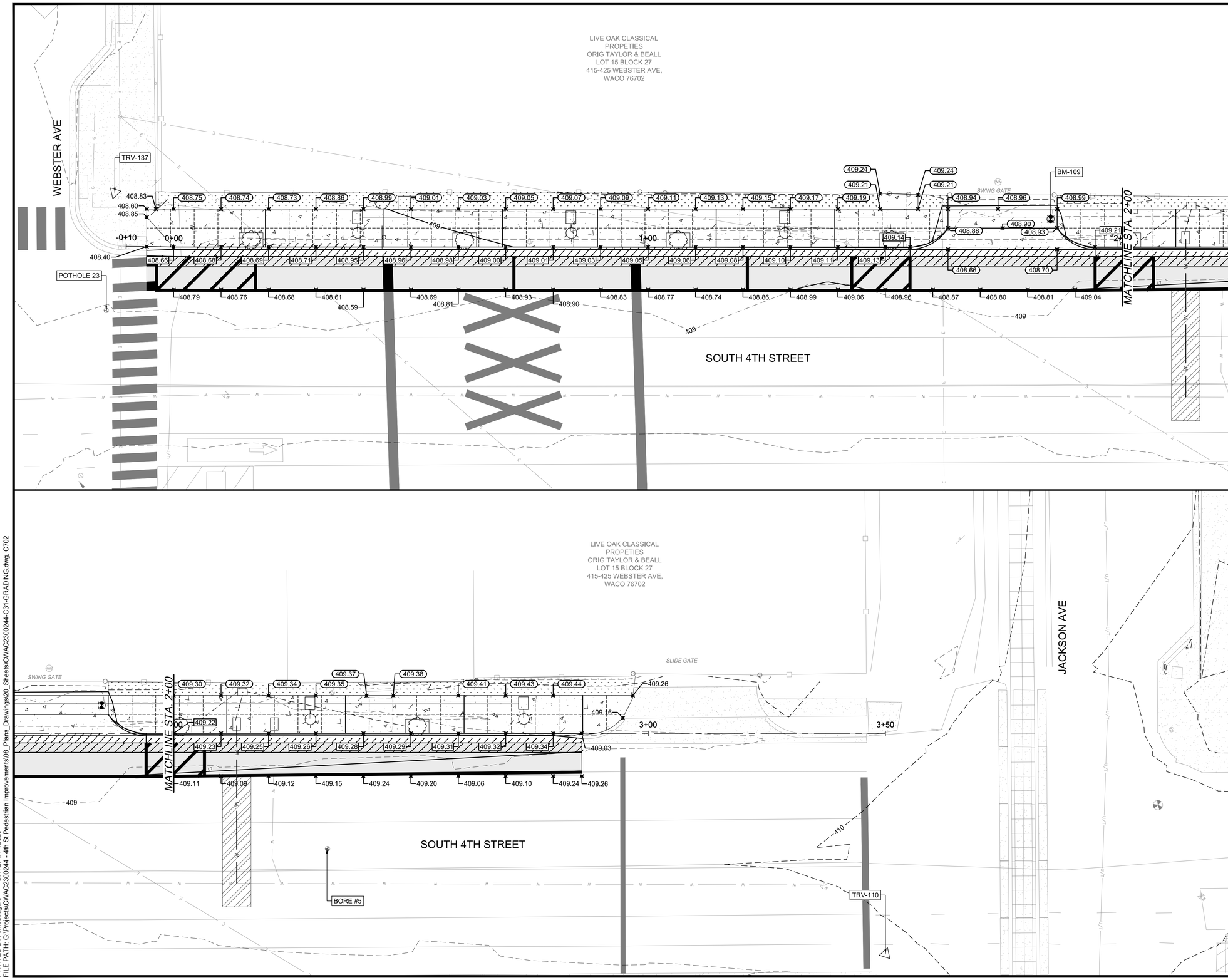

0 10 20
SCALE IN FEET

GRADING CALLOUTS

- 0.00 SPOT ELEVATION
- 0.00 TOP OF CURB ELEVATION
- 0.00 EXISTING ELEVATION

LEGEND

- EXISTING CONTOURS
- PROPOSED CONTOURS

CAUTION
GAS IN AREA

!!!CAUTION!!!
EXISTING OVERHEAD UTILITIES IN VICINITY. CONTRACTOR SHALL EXERCISE EXTREME CAUTION WHEN WORKING NEAR ELECTRIC FACILITIES.

!!!WARNING!!!
THE ENGINEER ASSUMES NO RESPONSIBILITY FOR THE ACCURACY OF THE LOCATION OF UNDERGROUND UTILITIES. THE CONTRACTOR SHALL BE RESPONSIBLE FOR LOCATION AND AVOIDING ALL EXISTING UTILITIES BY CALLING THE 'ONE CALL' LOCATOR SERVICE AT (800)344-8377 AT LEAST 48 HOURS PRIOR TO CONSTRUCTION.

CP&Y, INC.
TEXAS REGISTERED ENGINEERING FIRM
TBPE F-1741

STATE OF TEXAS
DAVID L. MAREK
#83327
REGISTERED
PROFESSIONAL ENGINEER
4-14-2023

NO.	REVISION	BY	DATE

VERIFY SCALE 0 1"
BAR LENGTH EQUALS ONE INCH ON ORIGINAL DRAWING. VERIFY LENGTH ON THIS SHEET AND ADJUST SCALE ACCORDINGLY.

CITY OF WACO
4TH STREET PEDESTRIAN IMPROVEMENTS

SITE GRADING PLANS

DESIGN: DLM
DRAWN: ECM
REVIEW: DLM
CP&Y: CWAC2300244
CLIENT:

SHEET
C702

PRINTED BY: emcdougald DATE: 4/14/2023
FILE PATH: G:\Projects\CWAC2300244 - 4th St Pedestrian Improvements\08_Plans_Drawings\20_Sheets\CWAC2300244-C31-GRADING.dwg, C702

G:\Projects\CWAC2300244 - 4th St Pedestrian Improvements\08_Plans_Drawings\20_Sheets\CWAC2300244-C31-GRADING.dwg, C702, 4/14/2023 2:50:44 PM, 1:1

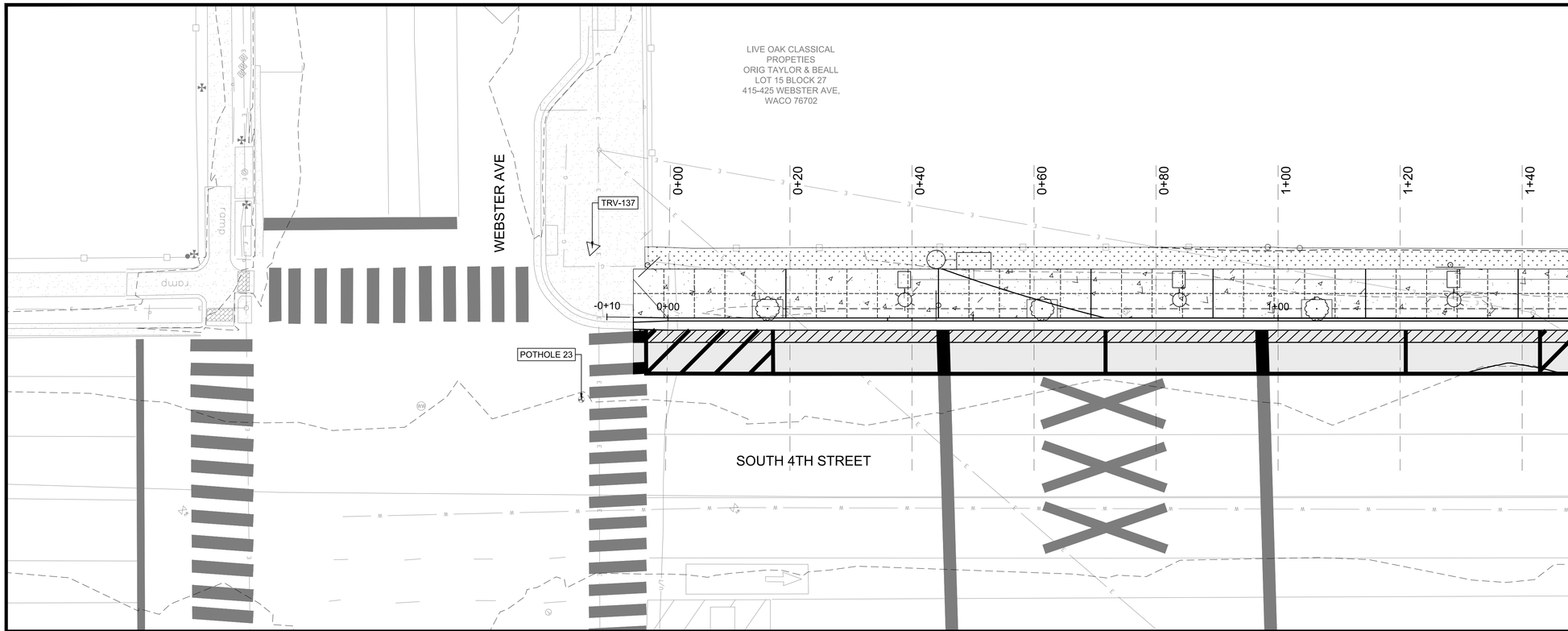

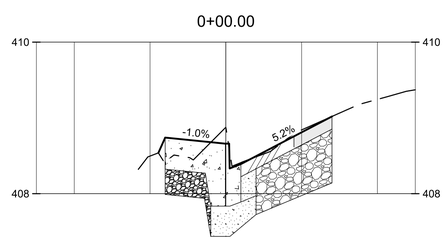

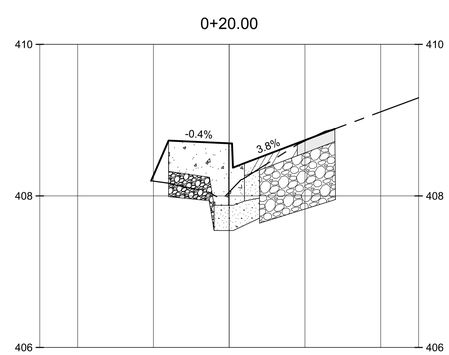

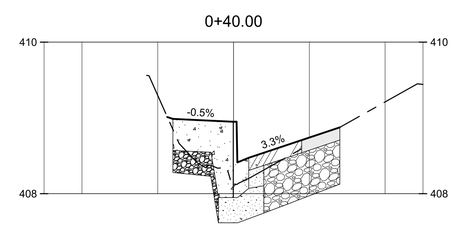

HORZ 0 10 20

VERT 0 1 2

SCALE IN FEET

LEGEND

- EXISTING CONTOURS
- PROPOSED CONTOURS
- EXISTING GRADE
- PROPOSED GRADE
- EXISTING HMAC PAVEMENT
- EXISTING PUG BASE
- PROPOSED HMAC PAVEMENT
- PROPOSED FLEXIBLE BASE
- PROPOSED REINFORCED CONCRETE PAVEMENT
- PROPOSED CEMENT STABILIZED BASE

CP&Y, INC.
TEXAS REGISTERED ENGINEERING FIRM
TBPE F-1741

STATE OF TEXAS
DAVID L. MAREK
#83327
REGISTERED
PROFESSIONAL ENGINEER

4-14-2023

NO.	REVISION	BY	DATE

VERIFY SCALE 1" 0
BAR LENGTH EQUALS ONE INCH ON ORIGINAL DRAWING. VERIFY LENGTH ON THIS SHEET AND ADJUST SCALE ACCORDINGLY

CITY OF WACO
4TH STREET PEDESTRIAN IMPROVEMENTS

CROSS SECTIONS
STA. 0+00 TO STA. 0+40

DESIGN: DLM
DRAWN: ECM
REVIEW: DLM
CP&Y: CWAC2300244
CLIENT:

SHEET
C750

PRINTED BY: emcdougald DATE: 4/14/2023
FILE PATH: G:\Projects\CWAC2300244 - 4th St Pedestrian Improvements\08_Plans_Drawings\20_Sheets\CWAC2300244-C32-SECTIONS.dwg, C750

G:\Projects\CWAC2300244 - 4th St Pedestrian Improvements\08_Plans_Drawings\20_Sheets\CWAC2300244-C32-SECTIONS.dwg, C750, 4/14/2023 2:51:37 PM, 1:1

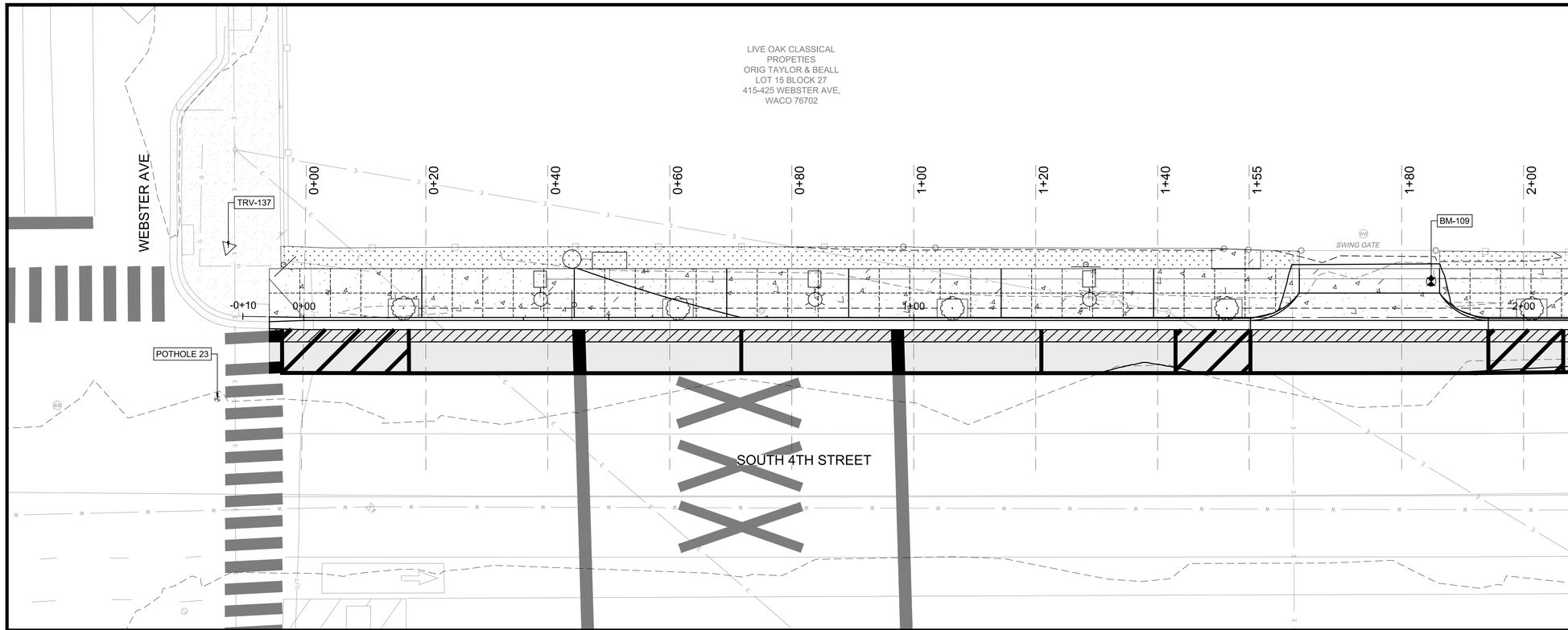

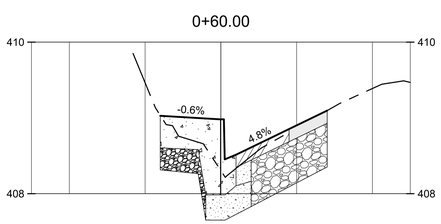

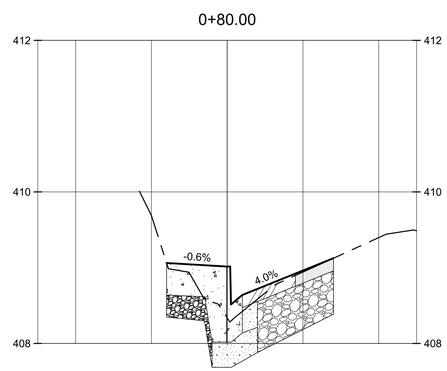

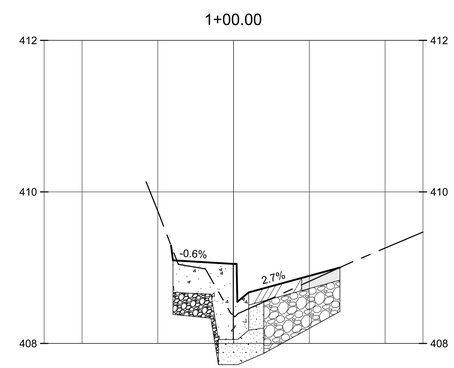

HORZ 0 10 20
VERT 0 1 2
SCALE IN FEET

LEGEND

- EXISTING CONTOURS
- PROPOSED CONTOURS
- EXISTING GRADE
- PROPOSED GRADE
- EXISTING HMAC PAVEMENT
- EXISTING PUG BASE
- PROPOSED HMAC PAVEMENT
- PROPOSED FLEXIBLE BASE
- PROPOSED REINFORCED CONCRETE PAVEMENT
- PROPOSED CEMENT STABILIZED BASE

CP&Y, INC.
TEXAS REGISTERED ENGINEERING FIRM
TBPE F-1741

STATE OF TEXAS
DAVID L. MAREK
#83327
REGISTERED
PROFESSIONAL ENGINEER
4-14-2023

NO.	REVISION	BY	DATE

VERIFY SCALE 1" 0
BAR LENGTH EQUALS ONE INCH ON ORIGINAL DRAWING. VERIFY LENGTH ON THIS SHEET AND ADJUST SCALE ACCORDINGLY

CITY OF WACO
4TH STREET PEDESTRIAN IMPROVEMENTS

CROSS SECTIONS
STA. 0+60 TO STA. 1+00

DESIGN: DLM
DRAWN: ECM
REVIEW: DLM
CP&Y: CWAC2300244
CLIENT:

SHEET
C751

PRINTED BY: emcdougald DATE: 4/14/2023
FILE PATH: G:\Projects\CWAC2300244 - 4th St Pedestrian Improvements\08_Plans_Drawings\20_Sheets\CWAC2300244-C32-SECTIONS.dwg, C751

G:\Projects\CWAC2300244 - 4th St Pedestrian Improvements\08_Plans_Drawings\20_Sheets\CWAC2300244-C32-SECTIONS.dwg, C751, 4/14/2023 2:52:03 PM, 1:1

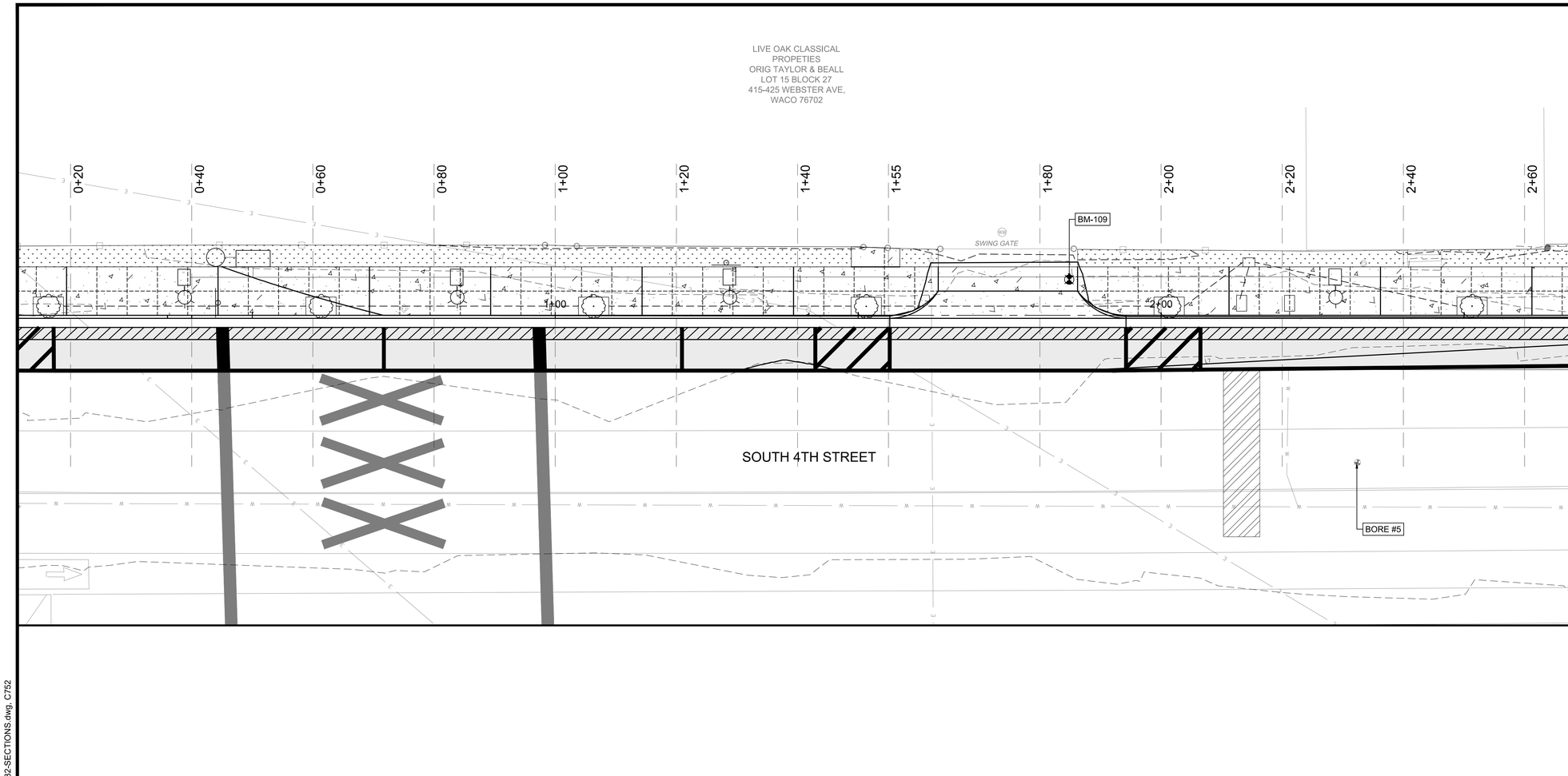

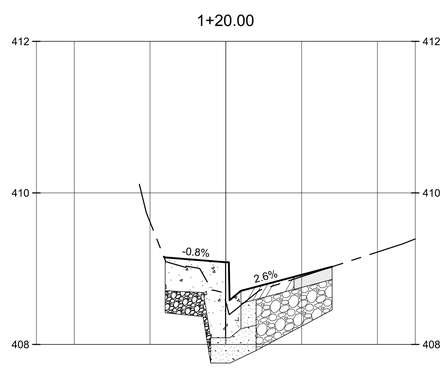

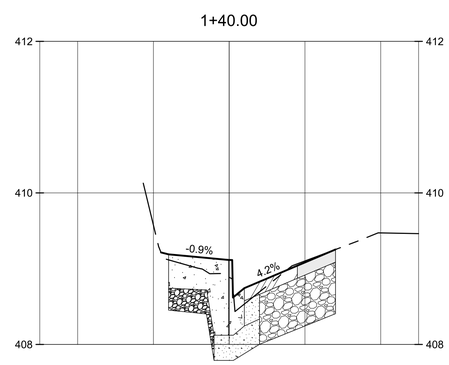

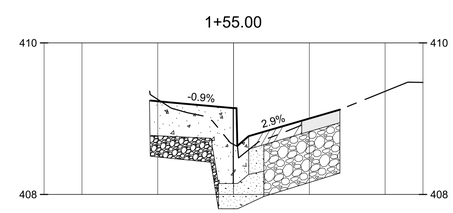

HORZ 0 10 20

VERT 0 1 2

SCALE IN FEET

LEGEND

- EXISTING CONTOURS
- PROPOSED CONTOURS
- EXISTING GRADE
- PROPOSED GRADE
- EXISTING HMAC PAVEMENT
- EXISTING PUG BASE
- PROPOSED HMAC PAVEMENT
- PROPOSED FLEXIBLE BASE
- PROPOSED REINFORCED CONCRETE PAVEMENT
- PROPOSED CEMENT STABILIZED BASE

CP&Y, INC.
TEXAS REGISTERED ENGINEERING FIRM
TBPE F-1741

STATE OF TEXAS
DAVID L. MAREK
#83327
REGISTERED
PROFESSIONAL ENGINEER

4-14-2023

NO.	REVISION	BY	DATE

VERIFY SCALE 1" 0
BAR LENGTH EQUALS ONE INCH ON ORIGINAL DRAWING. VERIFY LENGTH ON THIS SHEET AND ADJUST SCALE ACCORDINGLY.

CITY OF WACO
4TH STREET PEDESTRIAN IMPROVEMENTS

CROSS SECTIONS
STA. 1+20 TO STA. 1+55

DESIGN: DLM
DRAWN: ECM
REVIEW: DLM
CP&Y: CWAC2300244
CLIENT:

SHEET
C752

PRINTED BY: emcdougald DATE: 4/14/2023
FILE PATH: G:\Projects\CWAC2300244 - 4th St Pedestrian Improvements\08_Plans_Drawings\20_Sheets\CWAC2300244-C32-SECTIONS.dwg, C752

G:\Projects\CWAC2300244 - 4th St Pedestrian Improvements\08_Plans_Drawings\20_Sheets\CWAC2300244-C32-SECTIONS.dwg, C752, 4/14/2023 2:52:29 PM, 1:1

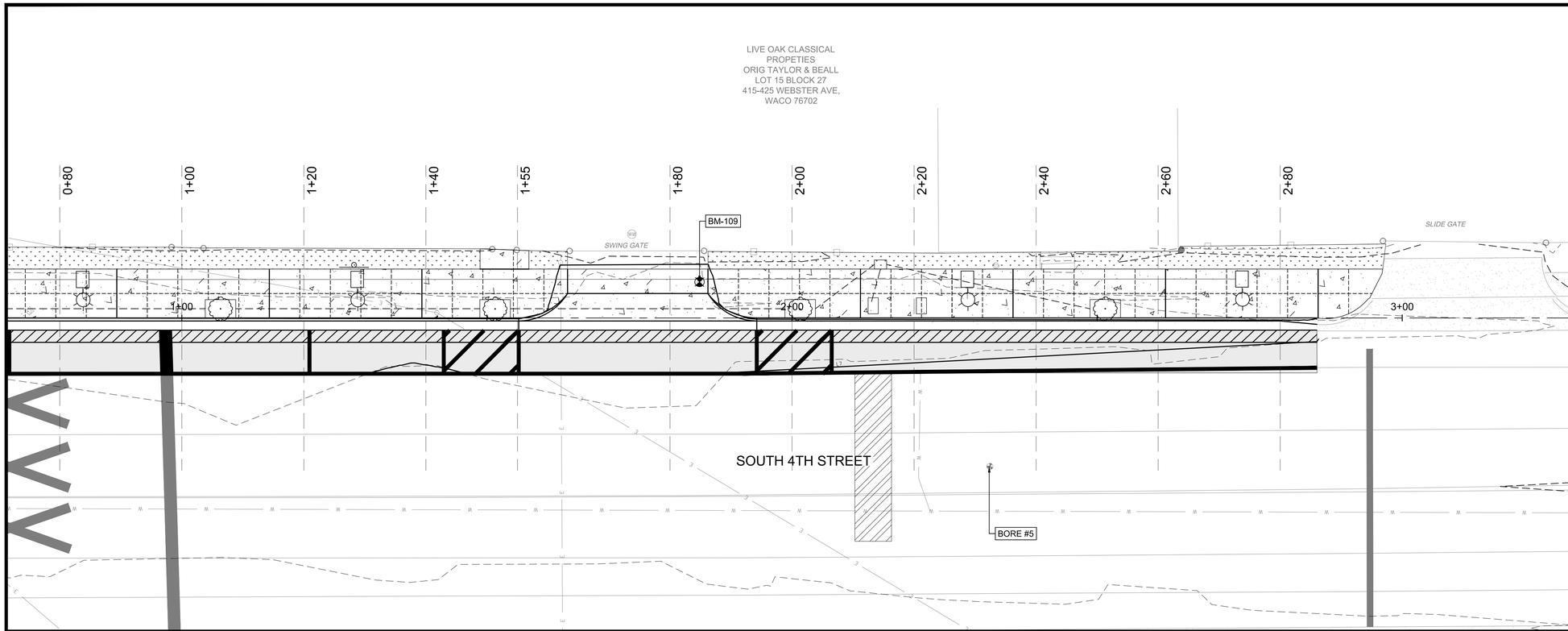

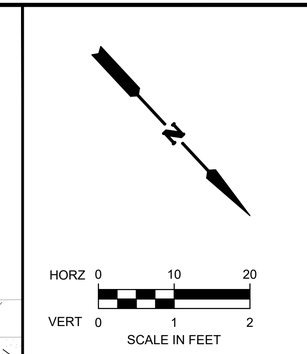

LEGEND

- EXISTING CONTOURS
- PROPOSED CONTOURS
- EXISTING GRADE
- PROPOSED GRADE
- EXISTING HMAC PAVEMENT
- EXISTING PUG BASE
- PROPOSED HMAC PAVEMENT
- PROPOSED FLEXIBLE BASE
- PROPOSED REINFORCED CONCRETE PAVEMENT
- PROPOSED CEMENT STABILIZED BASE

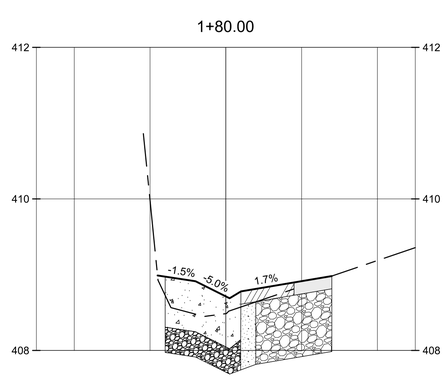

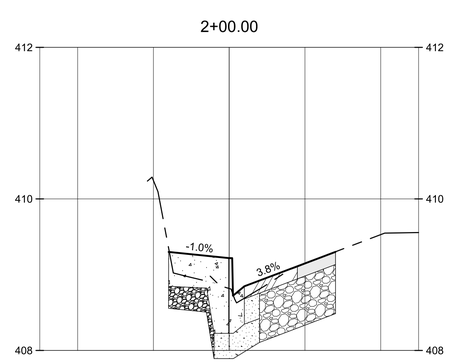

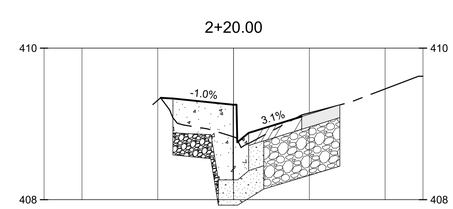

CP&Y, INC.
TEXAS REGISTERED ENGINEERING FIRM
TBPE F-1741

STATE OF TEXAS
DAVID L. MAREK
#83327
REGISTERED
PROFESSIONAL ENGINEER
4-14-2023

NO.	REVISION	BY	DATE

VERIFY SCALE 0 1" BAR LENGTH EQUALS ONE INCH ON ORIGINAL DRAWING. VERIFY LENGTH ON THIS SHEET AND ADJUST SCALE ACCORDINGLY

CITY OF WACO
4TH STREET PEDESTRIAN IMPROVEMENTS

CROSS SECTIONS
STA. 1+80 TO STA. 2+20

DESIGN: DLM
DRAWN: ECM
REVIEW: DLM
CP&Y: CWAC2300244
CLIENT:

SHEET
C753

PRINTED BY: emcdougald DATE: 4/14/2023
FILE PATH: G:\Projects\CWAC2300244 - 4th St Pedestrian Improvements\08_Plans_Drawings\20_Sheets\CWAC2300244-C32-SECTIONS.dwg, C753

G:\Projects\CWAC2300244 - 4th St Pedestrian Improvements\08_Plans_Drawings\20_Sheets\CWAC2300244-C32-SECTIONS.dwg, C753, 4/14/2023 2:52:55 PM, 1:1

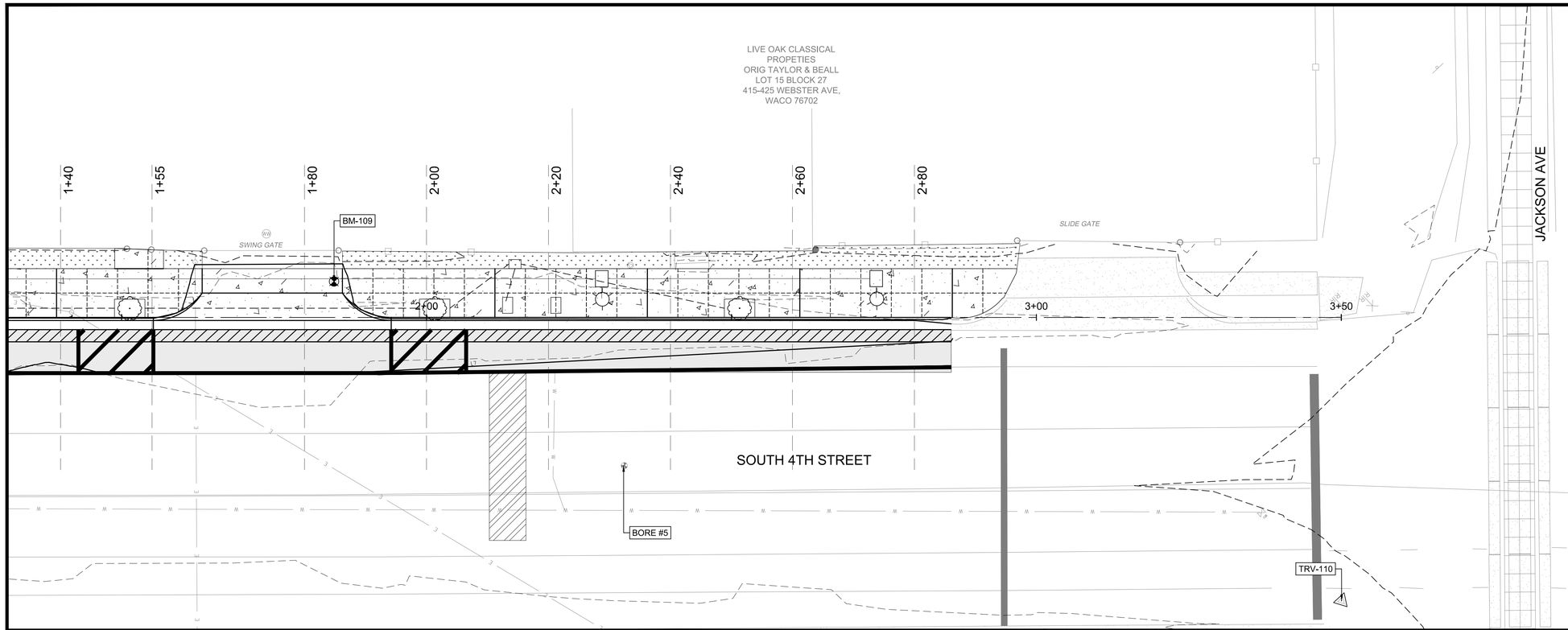

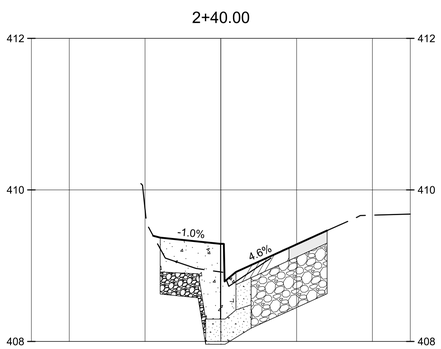

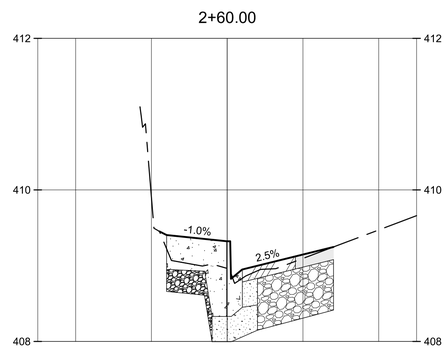

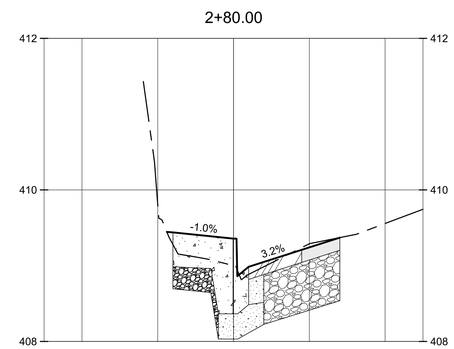

HORZ 0 10 20

VERT 0 1 2

SCALE IN FEET

LEGEND

- EXISTING CONTOURS
- PROPOSED CONTOURS
- EXISTING GRADE
- PROPOSED GRADE
- EXISTING HMAC PAVEMENT
- EXISTING PUG BASE
- PROPOSED HMAC PAVEMENT
- PROPOSED FLEXIBLE BASE
- PROPOSED REINFORCED CONCRETE PAVEMENT
- PROPOSED CEMENT STABILIZED BASE

CAUTION
GAS IN AREA

!!!CAUTION!!!

EXISTING OVERHEAD UTILITIES IN VICINITY. CONTRACTOR SHALL EXERCISE EXTREME CAUTION WHEN WORKING NEAR ELECTRIC FACILITIES.

!!!WARNING!!!

THE ENGINEER ASSUMES NO RESPONSIBILITY FOR THE ACCURACY OF THE LOCATION OF UNDERGROUND UTILITIES. THE CONTRACTOR SHALL BE RESPONSIBLE FOR LOCATION AND AVOIDING ALL EXISTING UTILITIES BY CALLING THE 'ONE CALL' LOCATOR SERVICE AT (800)344-8377 AT LEAST 48 HOURS PRIOR TO CONSTRUCTION.

CP&Y, INC.
TEXAS REGISTERED ENGINEERING FIRM
TBPE F-1741

STATE OF TEXAS
DAVID L. MAREK
#83327
REGISTERED
PROFESSIONAL ENGINEER

4-14-2023

NO.	REVISION	BY	DATE

VERIFY SCALE 0 1"
BAR LENGTH EQUALS ONE INCH ON ORIGINAL DRAWING. VERIFY LENGTH ON THIS SHEET AND ADJUST SCALE ACCORDINGLY

CITY OF WACO
4TH STREET PEDESTRIAN IMPROVEMENTS

CROSS SECTIONS
STA. 2+40 TO STA. 2+80

DESIGN: DLM
DRAWN: ECM
REVIEW: DLM
CP&Y: CWAC2300244
CLIENT:

SHEET
C754

PRINTED BY: emcdougald DATE: 4/14/2023
FILE PATH: G:\Projects\CWAC2300244 - 4th St Pedestrian Improvements\08_Plans_Drawings\20_Sheets\CWAC2300244-C32-SECTIONS.dwg, C754

G:\Projects\CWAC2300244 - 4th St Pedestrian Improvements\08_Plans_Drawings\20_Sheets\CWAC2300244-C32-SECTIONS.dwg, C754, 4/14/2023 2:53:21 PM, 1:1

PC	120V. PHOTOCELL
	NON-FUSIBLE SAFETY SWITCH, SIZE AS NOTED (A RATING/POLES)
	FUSIBLE SAFETY SWITCH, SIZE AS NOTED (AMP RATING/POLES)
	COMBINATION MOTOR STARTER
VFD	FACTORY WIRED CONTROLLER OR EQUIPMENT
	MOTOR CONNECTION
UH	UNIT HEATER CONNECTION
	DUCT HEATER CONNECTION
J	JUNCTION BOX
	PANELBOARD - FLUSH MOUNTED
	PANELBOARD - SURFACE MOUNTED
XRIPLIN	X-RAY ISOLATION PANEL LINE ISOLATION MONITOR
IPLIM	ISOLATION PANEL LINE ISOLATION MONITOR
C	CLOCK, SINGLE FACE - CLOCK AND RECEPTACLE AS SPECIFIED.
CDF	CLOCK, DOUBLE FACE - CLOCK AND RECEPTACLE AS SPECIFIED.
C IT	INTERVAL TIMER
MGAP	MEDICAL GAS ALARM PANEL
LPA	MEDICAL GAS LINE PRESSURE ALARM
MGPS	MEDICAL GAS PRESSURE SWITCH
SC	SECURITY SYSTEM CONTROL PANEL
DSDJ	DOOR SWITCH MOUNTED IN DOOR JAMB
DRB	DOOR RELEASE PUSH BUTTON
CR	CARD READER
MD	MOTION DETECTOR
	CIRCUIT HOMERUN - ARROWHEADS INDICATE QUANITY OF CIRCUITS
	EXTERIOR CONDUIT BELOW GRADE OR CONCEALED CONDUIT IN SLAB
	CONCEALED CONDUIT
	BURIED, UNDERGROUND CABLE

LIGHTING

5	DESIGNATES FIXTURE TYPE - SEE LIGHTING FIXTURE SCHEDULE
	NORMAL BRANCH SURFACE OR RECESSED FLUORESCENTFIXTURE (TYPE DETERMINES MOUNTING)
	CRITICAL BRANCH SURFACE OR RECESSED FLUORESCENT FIXTURE (TYPE DETERMINES MOUNTING)
	LIFE-SAFETY BRANCH SURFACE OR RECESSED FLUORESCENT FIXTURE (TYPE DETERMINES MOUNTING)
	NORMAL BRANCH SURFACE OR RECESSED FIXTURE (TYPE DETERMINES MOUNTING)
	CRITICAL BRANCH SURFACE OR RECESSED FIXTURE(TYPE DETERMINES MOUNTING)
	LIFE-SAFETY BRANCH SURFACE OR RECESSED FIXTURE(TYPE DETERMINES MOUNTING)
	NORMAL BRANCH SURFACE OR SUSPENDED FLUORESCENT FIXTURE (TYPE DETERMINES MOUNTING)
	CRITICAL BRANCH SURFACE OR SUSPENDED FLUORESCENT FIXTURE (TYPE DETERMINES MOUNTING)
	LIFE-SAFETY BRANCH SURFACE OR SUSPENDED FLUORESCENTFIXTURE (TYPE DETERMINES MOUNTING)
	NORMAL BRANCH WALL BRACKET FIXTURE
	CRITICAL BRANCH WALL BRACKET FIXTURE
	LIFE-SAFETY BRANCH WALL BRACKET FIXTURE
	EXIT LIGHT, PROVIDE DIRECTIONAL ARROWS AS INDICATEDON PLANS
	BATTERY POWERED EMERGENCY LIGHT
	TRACK LIGHTING
	GROUND AND POLE MOUNTED SITE FIXTURES

SWITCHES

S	SINGLE POLE SWITCH	48" A.F.F
S_2	DOUBLE POLE SWITCH - CENTER OFF	48" A.F.F
S_3	THREE WAY SWITCH	48" A.F.F
S_4	FOUR WAY SWITCH	48" A.F.F
S_K	SINGLE POLE SWITCH - KEY OPERATED	48" A.F.F
S_D	DIMMER SWITCH	
S_V	VARIABLE INTENSITY CONTROL	
S_T	INTERVAL TIMER CONTROL SWITCH	
S_P	SINGLE POLE SWITCH WITH PILOT LIGHT	48" A.F.F
S_{OC}	OCCUPANCY SENSOR SWITCH	
S_M	MOTOR RATED SWITCH WITH THERMAL OVERLOAD	
OC	OCCUPANCY SENSOR CEILING MOUNTED	
DS	DAYLIGHT SENSOR - CEILING MOUNTED	

ABBREVIATIONS

ABC	ABOVE COUNTER
AFF	ABOVE FINISHED FLOOR
AFG	ABOVE FINISHED GRADE
C	RED- EMERGENCY POWER
CLG	CEILING
FBO	FURNISHED BY OTHERS
IG	ISOLATED GROUND
S	SAFETY TYPE
SMH	SPECIAL MOUNTING HEIGHT- AS NOTED OR SEE SPECS
TV	TELEVISION
WP	WEATHERPROOF

TYPICAL MOUNTING HEIGHTS

THE CONTRACTOR SHALL COORDINATE THE MOUNTING HEIGHT OF ALL FIXTURES DEVICES, AND OUTLETS WITH ARCHITECTURAL PLANS AND ELEVATIONS. SPECIAL MOUNTING HEIGHTS SHOWN ON THE PLANS SHALL TAKE PRECEDENCE OVER THOSE GIVEN BELOW. ALL MOUNTING HEIGHTS ARE FROM FINIDHED FLOOR TO CENTERLINE OF DEVICE, UNLESS NOTED OTHERWISE.

LIGHTING FIXTURES	WALL MOUNTED, SCONCE WALL MOUNTED, ABOVE MIRROR WALL MOUNTED, ABOVE DOOR WALL MOUNTED, ABOVE STAIR LANDING INSOFFIT WALL MOUNTED, BESIDE DOOR STEP MOUNTED WALL MOUNTED, NEAR GRADE WALL MOUNTED, NEAR ROOF	6'-6" 0'-8" ABOVE TOP OF MIRROR CENTER BETWEEN FRAME & CEILING 7'-0" (SEE ARCHITECTURAL DETAIL) 6'-0" (SEE ACHITECTURAL) 8'-0" ABOVE GRADE LEVEL 2'-6" BELOW PARAPET
SWITCHES	WALL SWITCHES AND DIMMERS MANUAL MOTOR STARTERS	3'-10" 3'-10"
RECEPTACLES	WALL ABOVE COUNTER WITHOUT BACKSPLASH ABOVE COUNTER WITH BACKSPLASH IN O.R.'S X-RAY FILM ILLUMINATORS FOR TELEVISION WALL HUNG SINKS (GFCI) PHYSICAL THERAPY (GCFI) CLOCK	1'-6" 0'-8" ABOVE TOP OF COUNTER 0'-4" ABOVE TOP OF BACKSPLASH 1'-6" 2" BELOW AND 2" TO THE RIGHT OF LOWER RIGHT HAND CORNER (SAME AS TV OUTLET) 3'-6" 3'-0" 1'-0 BELOW CEILING
MULTIOUTLET RACEWAY	WALL ABOVE COUNTER WITHOUT BACKSPLASH ABOVE COUNTER WITH BACKSPLASH	3'-0" 0'-8" ABOVE TOP OF COUNTER 0'-4" ABOVE TOP OF BACKSPLASH
TELEPHONE	DESK/TABLE WALL TELEPHONE PAY TELEPHONE ABOVE COUNTER WITHOUT BACKSPLASH ABOVE COUNTER WITH BACKSPLASH PAT TELEPHONE, HANDICAPPED	1'-6" 3'-10" 3'-10" 0'-8" ABOVE TOP OF COUNTER 0'-4" ABOVE TOP OF BACKSPLASH (SEE ARCHITECTURAL DETAIL)
DATA OUTLETS	WALL ABOVE COUNTER WITHOUT BACKSPLASH ABOVE COUNTER WITH BACKSPLASH	1'-6" 0'-8" ABOVE TOP OF COUNTER 0'-4" ABOVE TOP OF BACKSPLASH
ELECTRICAL EQUIPMENT	SAFETY SWITCH MOTOR STARTER PANELBOARD COMMUNICATION CABINET	6'-6" TO TOP OF ENCLOSURE 6'-6" TO TOP OF ENCLOSURE 6'-6" TO TOP OF ENCLOSURE 6'-6" TO TOP OF ENCLOSURE
TV CABLE OUTLET	WALL ARMOIRES WALL BRACKET	1'-6" 0'-4" ABOVE SHELF FOR TV CENTERLINE OF BRACKET
CONTROL/SECURITY	DOOR ALARM PUSHBOTTON DOOR ACCESS KEYPAD CCTV CAMERA CCTV MONITOR	3'-10" 3'-10" 3'-10" 0'-6" BELOW CEILING LEVEL -
FIRE ALARM	MANUAL PULL CHIME, HORN AND/OR STROBE SMOKE, HEAT DETECTORS CONTROL PANEL, ANNUNCIATOR MAGNETIC DOOR HOLDER	3'-10" 6'-8" OR 0'-6" BELOW CEILING (WHICHEVER IS LOWER) CEILING 6'-6" TO TOP OF ENCLOSURE 0'-8" DOWN FROM TOP OF DOOR
NURSE CALL	EMERGENCY PULL CORD STATION @ TOILET @SHOWER SINGLE OR DUAL PATIENT STATION CODE BLUE STAFF AND DUTY STATION DOE AND ZONE LIGHTS NURSE PRESENCE STATION NURSE CALL MASTER STATION NURSE CALL TERMINAL CABINET	3'-10" 3'-6" AT HEIGHT OF SHOWER HEAD 3'-10" 3'-10" 3'-10" CEILING 3'-10" 0'-8" ABOVE COUNTER 6'-6" TO TOP OF ENCOLSURE
MONITOR	WALL ABOVE COUNTER WALL BRACKET SOFFIT	1'-6" 0'-8" ABOVE TOP OF COUNTER CENTERLINE OF BRACKET (SEE ARCHITECTURAL DETAIL)

TELEPHONE/DATA

T	TELEPHONE (BACKBOX WITH CONDUIT)	1'-6" AFF TO CL
W	WALL TELEPHONE (BACKBOX WITH CONDUIT)	4'-6" AFF TO CL
	TELEPHONE, SPECIAL MOUNTING HEIGHT (BACKBOX WITH CONDUIT)	AS NOTED SEE SPECS.
	TELEPHONE FLOOR BOX	
C	DATA/TELEPHONE (BACKBOX WITH CONDUIT)	1'-6" AFF TO CL
	COMBINATION DATA/TELEPHONE, SPECIAL MOUNTING HEIGHT (BACKBOX WITH CONDUIT)	AS NOTED SEE SPECS.
	DATA (BACKBOX WITH CONDUIT)	1'-6" AFF TO CL
	DATA, SPECIAL MOUNTING HEIGHT (BACKBOX WITH CONDUIT)	AS NOTED SEE SPECS.
	DATA FLOOR BOX	

POWER - RECEPTACLES

	120V. DUPLEX RECEPTACLE - (REFER TO RECEPTACLE ABBREVIATIONS FOR EXCEPTIONS
42"	120V. DUPLEX RECEPTACLE - SPECIAL MOUNTING HEIGHT (REFER TO RECEPTACLE ABBREVIATIONS FOR EXCEPTIONS)
	120V. QUADRUPLEX RECEPTACLE - (REFER TO RECEPTACLE ABBREVIATIONS FOR EXCEPTIONS)
42"	120V. QUADPLEX RECEPTACLE - SPECIAL MOUNTING HEIGHT (REFER TO RECEPTACLE ABBREVIATIONS FOR EXCEPTIONS)
	240V., 2-POLE, SINGLE RECEPTACLE, RATING AS SHOWN ON PLANS
	120V. GFCI DUPLEX RECEPTACLE - (REFER TO RECEPTACLE ABBREVIATIONS FOR EXCEPTIONS
	120V. GFCI QUADRUPLEX RECEPTACLE - (REFER TO RECEPTACLE ABBREVIATIONS FOR EXCEPTIONS)
	CONNECTION FOR FILM ILLUMINATOR, COORDINATE ROUGH-IN PRIOR TO INSTALLATION
C	WIREMOLD - LENGTH AS REQUIRED - EMERGENCY POWER
	WIREMOLD - LENGTH AS REQUIRED - NORMAL POWER
GM	GROUND JACK MODULE
GB	GROUNDING COLLECTION BUS
RGM	GROUND AND RECEPTACLE MODULE

FIRE ALARM

V	FIRE ALARM VISUAL STATION - LIGHT ONLY
F	FIRE ALARM MANUAL PULL STATION
F	FIRE ALARM HORN/VISUAL
M	MAGNETIC DOOR HOLDER
H	HEAT DETECTOR
SD	DUCT SMOKE DETECTOR
S	SMOKE DTECTOR
FS	SPRINKLER SYSTEM FLOW SWITCH
FACP	FIRE ALARM CONTROL PANEL
RA	FIRE ALARM REMOTE ANNUNCIATOR

ELECTRICAL ABBREVIATIONS

ABBR	DEFINITION	ABBR	DEFINITION
A	AMPERE	JB	JUNCTION BOX
ABC	ABOVE COUNTER	KV	KILOVOLT
AC	ALTERNATING CURRENT	KVA	KILOVOLT-AMPERE
AF	AMPERE FUSE	KW	KILOWATT
AFF	ABOVE FINISHED FLOOR	LTG	LIGHTING
AHU	AIR HANDLING UNIT	MAX	MAXIMUM
KAIC	AMPS INTERRUPTING CAPACITY x1000	MCB	MAIN CIRCUIT BREAKER
AT	AMPERE TRIP	MCC	MOTOR CONTROL CENTER
ANN	ANNUNCIATOR	MCM	CIRCULAR MILS, THOUSANDS
APP	APPROXIMATE	MECH	MECHANICAL
ARCH	ARCHITECT	MFR	MANUFACTURER
ATS	AUTOMATIC TRANSFER SWITCH	MGAP	MEDICAL GAS ALARM PANEL
AWG	AMERICAN WIRE GAUGE	MLO	MAIN LUGS ONLY
BLDG	BUILDING	MTD	MOUNTED
BSMT	BASEMENT	MTG	MOUNTING
C	CONDUIT	NEC	NATIONAL ELECTRICAL CODE
CAB	CABINET	NTS	NOT TO SCALE
CB	CIRCUIT BREAKER	PNL	PANEL
CKT	CIRCUIT	PH	PHASE
CLG	CEILING	P	POLE
CL	CENTER LINE	PFB	PROVISIONS FOR BREAKER
CT	CURRENT TRANSFORMER	PA	PUBLIC ADDRESS
CU	COPPER	RECP	RECEPTACLE
DISC	DISCONNECT	REFRIG	REFRIGERATOR
DN	DOWN	REQD	REQUIRED
DWG	DRAWING	SN	SOLID NEUTRAL
EA	EACH	SPKR	SPEAKER
EDF	ELECTRIC DRINKING FOUNTAIN	SPEC	SPECIFICATION
EF	EXHAUST FAN	SWBD	SWITCHBOARD
ELEV	ELEVATOR	SWGR	SWITCHGEAR
EP	EXPLOSION-PROOF	TEL	TELEPHONE
EQPT	EQUIPMENT	TTB	TELPHONE TERMINAL BOARD
EXTG	EXISTING	TV	TELEVISION
FA	FIRE ALARM	TVSS	TRANSIENT VOLT. SURGE SUPPRESSOR
FACP	FIRE ALARM CONTROL PANEL	TYP	TYPICAL
FCU	FAN COIL UNIT	UC	UNDER COUNTER
FLA	FULL LOADS AMPS	UH	UNIT HEATER
FLR	FLOOR	V	VOLT
GFCI	GROUND FAULT CURCUIT INTERRUPTER	VA	VOLTAMPERE
GND	GROUND	W	WATT
HTR	HEATER	WH	WATER HEATER

GENERAL NOTES TO CONTRACTOR

1. THE CONTRACTOR SHALL NOT DEVIATE FROM DESIGN. THE CONTRACTOR SHALL FURNISH AND INSTALL ALL WORK TO MATCH THE DRAWINGS AS SHOWN. ANY DEVIATION FROM THE DESIGN BY THE CONTRACTOR WILL RESULT IN THE CONTRACTOR PAYING ENGINEER DIRECTLY TO UPDATE ANY CITY REQUIRED CHANGES ON CITY DRAWINGS. THE FEE AMOUNT WILL BE DETERMINED BASED ON EXTENT OF CHANGES AND TIMEFRAME. THIS DOES NOT SUBSTITUTE FOR AS-BUILT RECORD DRAWINGS THAT THE CONTRACTOR SHALL FURNISH TO OWNER. AS-BUILT AND SHOP DRAWINGS ARE STILL REQUIRED AS PER STANDARD INDUSTRY PRACTICE.

2. THE CONTRACTOR SHALL CARRY A LINE ITEM ALLOWANCE CONTINGENCY OF $1,500 WHICH SHALL BE USED FOR ANY INCIDENTAL CITY INSPECTION ITEMS THAT COME UP AT THE LAST MINUTE AND WERE NOT BROUGHT UP IN THE PLAN CHECK AND AWARDING OF THE PERMIT. IF NO SUCH ITEMS ARE BROUGHT UP BY THE CITY DURING INSPECTIONS (INCLUDING FINAL) CITY AWARDS THE C.O. FOR THE OWNER TO MOVE IN THEN THE ALLOWANCE SHALL BE CREDITED IN FULL TO THE OWNER.

3. GC/CONSTRUCTION MANAGER SHALL BE RESPONSIBLE TO CROSS COORDINATE THE MEP DRAWINGS WITH THE ARCHITECTURAL SPECIFICALLY, BUT NOT LIMTED TO, POWER AND DATA OUTLETS LIGHT FIXTURES, LIGHT FIXTURES SWITCHING, SUPPLY OF WATER FOR COFFEE, REFRIGERATOR, DRINKING WATER DEVICES ETC.

4. WHERE NEW LIGHTS OR RECEPTACLES ARE DESIGNED TO BE CONNECTED TO AN EXISTING CIRCUIT, ELECTRICIAN SHALL TRACE EXSTING CIRCUIT TO DETERMINE CIRCUIT LOADING. THE LOAD ON A 20 AMP CIRCUIT SHALL NOT EXCEED 16 AMPS WHERE THIS CANNOT ACHIEVED, CONTRACTOR SHALL CONTACT THE ENGINEER FOR ALTERNATIVE CIRCUITING INSTRUCTIONS.

ELECTRICAL SHEET LIST

Sheet Number	Sheet Name
E1.0	LEGEND
E1.1	DIAGRAM
E1.2	SCHEDULE
E1.3	ELECTRICAL DETAILS
E2.1	LIGHTING FLOOR PLAN

TRILOGY ENGINEERING
ELECTRICAL PLUMBING MECHANICAL
TBPE # F-14307
WWW.TRILOGYENG.COM

CP&Y, INC.
TEXAS REGISTERED ENGINEERING FIRM
TBPE F-1741

STATE OF TEXAS
BRIAN L. KROLL
110044
LICENSED
PROFESSIONAL ENGINEER
4-14-23

NO.	REVISION	BY	DATE

VERIFY SCALE
0 1"
BAR LENGTH EQUALS ONE INCH ON ORIGINAL DRAWING. VERIFY LENGTH ON THIS SHEET AND ADJUST SCALE ACCORDINGLY.

CITY OF WACO
4TH STREET PEDESTRIAN IMPROVEMENTS

DESIGN:	2318
DRAWN:	AH
REVIEW:	BK
CP&Y:	
CLIENT:	

SHEET
E1.0

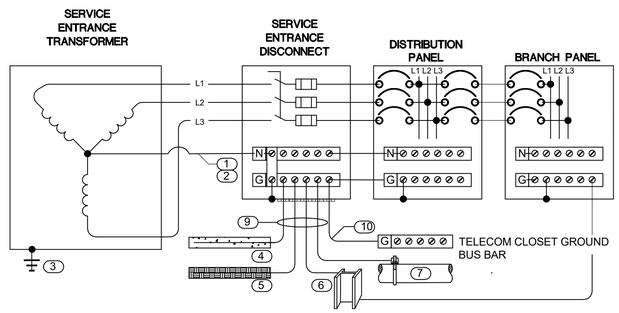

KEYED NOTES:

1. REFER TO ONE LINE AND PANEL SCHEDULES FOR CONDUCTOR SIZING NOT SHOWN ON GROUNDING SCHEMATIC.
2. UNO, ALL GROUNDING CONDUCTORS SHALL BE COPPER TYPE THHN/THWN.
3. TRANSFORMER GROUNDING PER UTILITY PROVIDER'S SPECIFICATION.
4. 20' OF MIN. 4AWG BARE COPPER CONDUCTOR ENCASED IN 2" MIN. OF CONCRETE FOUNDATION IN DIRECT CONTACT WITH EARTH.
5. 20' OF MIN. 4AWG BARE COPPER CONDUCTOR BURIED IN DIRECT CONTACT WITH EARTH AT 2' BELOW GRADE
6. CAD WELD CONNECTION TO BUILDING STEEL.
7. BONDING STRAP AT METAL COLD WATER AND GAS PIPING.
8. REFER TO I.T PROVIDER FOR GROUNDING SIZE
9. REFER TO RISER DIAGRAM FOR WIRE SIZE
10. TELECOM GROUND REFER TO IT CONTRACTOR FOR SIZE AND LOCATION

4 GROUNDING ONE-LINE DIAGRAM
N.T.S

PRIOR TO FINAL ORDERING OF PANELBOARDS, CIRCUIT BREAKERS AND ALL ASSOCIATED EQUIPMENT, THE CONTRACTOR SHALL ARRANGE FOR AND PROVIDE TO THE ELECTRICAL ENGINEER OF RECORD VIA ARCHITECT LETTER FROM THE LOCAL POWER COMPANY ON THEIR LETTERHEAD STATING THE SHORT CIRCUIT FAULT CURRENT AVAILABLE AT THE SECONDARY OF THE UTILITY COMPANY TRANSFORMER.

INFORMATION SHALL BE USED TO DETERMINE THE FINAL A.I.C. RATINGS OF PANELBOARDS, METER CENTERS, MAIN DISCONNECT SWITCH AND CIRCUIT BREAKERS.

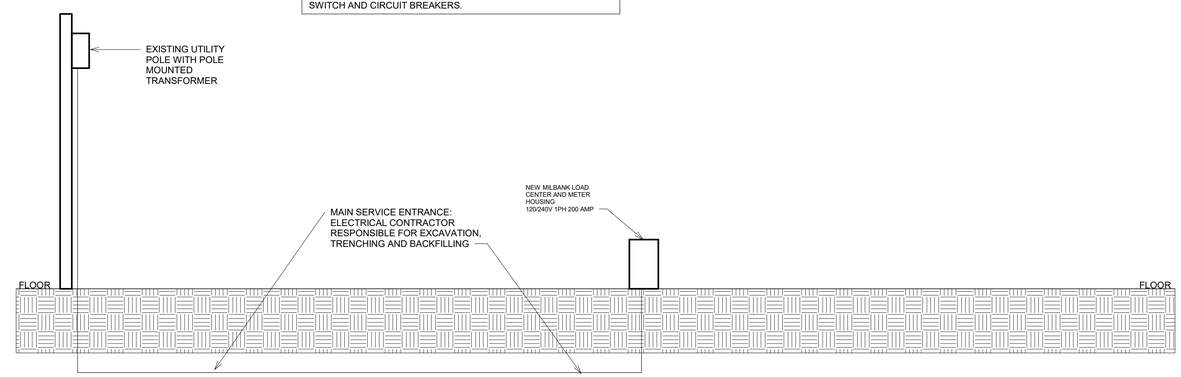

1 ELECTRICAL RISER DIAGRAM
1/2" = 1'-0"

WIRE SIZING SCHEDULE SINGLE PHASE	
CIRCUIT BREAKER	COPPER WIRE SIZE (INCLUDES NEUTRAL)
20 AMP	(3) 12, #12GR., 1/2"C.
25 AMP	(3) 10, #10GR., 1/2"C.
30 AMP	(3)10, #10GR., 3/4"C.
35 AMP	(3) 8, #10GR., 3/4"C.
40 AMP	(3) 8, #10GR., 3/4"C.
45 AMP	(3) 6, #10GR., 1"C.
50 AMP	(3) 6, #10GR., 1"C.
55 AMP	(3) 6, #10GR., 1"C.
60 AMP	(3) 4, #10GR., 1-1/4"C.
65 AMP	(3) 4, #8GR., 1-1/4"C.
70 AMP	(3) 4, #8GR., 1-1/4"C.
80 AMP	(3) 3, #8GR., 1-1/4"C.
90 AMP	(3) 2, #8GR., 1-1/4"C.
100 AMP	(2) 2, #8GR., 1-1/4"C.
125 AMP	(3) 1, #8GR., 1-1/2"C.
150 AMP	(3) 1/0, #6GR., 2"C.
200 AMP	(3) 3/0, #6GR., 2"C.
225 AMP	(3) 4/0, #4GR., 2-1/2"C.
250 AMP	(3) 250KCM, #4GR., 2-1/2"C.
400 AMP	(3) 600KCM, #3GR., 3-1/2"C.

WIRE SIZING SCHEDULE THREE PHASE	
CIRCUIT BREAKER	COPPER WIRE SIZE (INCLUDES NEUTRAL)
20 AMP	(4) 12, #12GR., 1/2"C.
25 AMP	(4) 10, #10GR., 1/2"C.
30 AMP	(4) 10, #10GR., 3/4"C.
35 AMP	(4) 8, #10GR., 3/4"C.
40 AMP	(4) 8, #10GR., 3/4"C.
45 AMP	(4) 6, #10GR., 1"C.
50 AMP	(4) 6, #10GR., 1"C.
55 AMP	(4) 6, #10GR., 1"C.
60 AMP	(4) 4, #10GR., 1-1/4"C.
65 AMP	(4) 4, #8GR., 1-1/4"C.
70 AMP	(4) 4, #8GR., 1-1/4"C.
80 AMP	(4) 3, #8GR., 1-1/4"C.
90 AMP	(4) 2, #8GR., 1-1/4"C.
100 AMP	(4) 2, #8GR., 1-1/4"C.
125 AMP	(4) 1, #8GR., 1-1/2"C.
150 AMP	(4) 1/0, #6GR., 2"C.
200 AMP	(4) 3/0, #6GR., 2"C.
225 AMP	(4) 4/0, #4GR., 2-1/2"C.
250 AMP	(4) 250KCM, #4GR., 2-1/2"C.
400 AMP	(4) 600KCM, #3GR., 3-1/2"C.

NOTES
CONTRACTOR TO INCREASE WIRE SIZING FOR LONG RUNS OF WIRING FOR VOLTAGE DROP ALLOWANCE. VOLTAGE DRAP SHALL NOT EXCEED 3 PERCENT

ELECTRICAL SPECIFICATIONS

1. THE WORK INCLUDES PROVIDING NEW MATERIALS, FIXTURES, DEVICES AND ACCESSORIES NECESSARY FOR A COMPLETE FUNCTIONING ELECTRICAL SYSTEM. ALL WORK SHALL BE IN ACCORDANCE WITH LOCAL CODES OR ORDINANCES AND SUBJECT TO INSPECTION.

2. COMPLY WITH ALL LAWS APPLYING TO ELECTRICAL INSTALLATIONS IN EFFECT, AND WITH THE MOST RECENT EDITION OF THE NATIONAL ELECTRICAL CODE, ADA, APPLICABLE SECTIONS OF OTHER NFPA, OSHA, LIFE SAFETY CODES AND RECOMMENDATIONS, AND THE INTERIM AMENDMENTS IN EFFECT AT THE TIME OF THE PROPOSAL. ALL MATERIALS USED SHALL BE NEW AND SHALL CONFORM TO THE STANDARDS ESTABLISHED BY THE UNDERWRITERS LABORATORIES INCORPORATED.

3. THE INTENT OF THE DRAWINGS IS TO INDICATE THE GENERAL EXTENT OF WORK REQUIRED FOR THE PROJECT. THE DRAWINGS FOR ELECTRICAL WORK ARE DIAGRAMMATIC, SHOWING THE LOCATION, TYPE, DEVICES AND EQUIPMENT REQUIRED. THE DRAWINGS SHALL NOT BE SCALED FOR EXACT MEASUREMENTS. PROVIDE ALL FIXTURES, DEVICES, ACCESSORIES, OFFSETS, AND MATERIALS NECESSARY TO FACILITATE THE SYSTEM'S FUNCTIONING AS INDICATED BY THE DESIGN AND THE EQUIPMENT FURNISHED BY OTHERS.

4. TEMPORARY SERVICES: ARRANGE FOR SOURCES OF TEMPORARY CONSTRUCTION SERVICES. SUCH SERVICES SHALL BE NOMINALLY 120/240 VOLT, SINGLE-PHASE, THREE-WIRE FROM WHICH A COMPLETE SYSTEM OF TEMPORARY POWER AND LIGHTING CAN BE PROVIDED FOR ALL CONSTRUCTION NEEDS.

5. ELECTRICAL DESIGN FOR THIS INSTALLATION IS BASED ON FIELD INSPECTIONS FOR THE EXISTING BUILDING. ELECTRICAL CONTRACTOR IS TO FIELD VERIFY EXISTING CONDITIONS PRIOR TO BIDDING. ALLOWANCES ARE TO BE INCLUDED FOR UNFORESEEN EXISTING CONDITIONS THAT MAY EFFECT THE CONTRACTOR'S SCOPE OF WORK. MINOR DEVIATIONS REQUIRED FOR ACCOMPLISHING THE INTENT OF THIS DESIGN IS TO BE INCLUDED IN THIS ALLOWANCE.

6. ELECTRICAL CONTRACTOR TO FIELD VERIFY ALL EXISTING UNDERGROUND UTILITIES. ANY ITEM DAMAGED BY THIS CONTRACTOR IS TO BE REPAIRED IMMEDIATELY AND AT NO COST TO THE OWNER.

7. ROOF PENETRATIONS SHALL COMPLY WITH "SMACNA" AND "NRCA" STANDARDS, AND WITH THE REQUIREMENTS OF THE EXISTING ROOFING WARRANTY, IF APPLICABLE. DO NOT PERFORM ROOFING PENETRATIONS IN A MANNER WHICH WOULD VOID OR OTHERWISE LIMIT THE EXISTING ROOFING WARRANTY.

8. ELECTRICAL CONTRACTOR TO FIELD VERIFY ALL EXISTING EQUIPMENT AS SHOWN ON DESIGN DRAWINGS AND ARE IN GOOD WORKING CONDITION PRIOR TO RE-USING. IF EXISTING CONDITIONS ARE NOT AS SHOWN OR ARE NOT IN GOOD WORKING CONDITION, CONTRACTOR SHALL PROVIDE EQUIPMENT, CONDUIT, AND/OR WIRE INDICATED TO PROVIDE A "LIKE-NEW" AND CODE COMPLIANT INSTALLATION. CONTRACTOR IS RESPONSIBLE FOR RELOCATING ANY EXISTING ITEMS BEING REUSED. ANY EXISTING EQUIPMENT, CONDUIT OR WIRE NOT BEING REUSED SHALL BE REMOVED BY THIS CONTRACTOR.

9. ELECTRICAL DESIGN HAS BEEN BASED ON THE INSTALLATION OF 75 DEGREES C CONDUCTORS CONNECTED TO TERMINAL LUGS AND EQUIPMENT, U.L. LISTED FOR A MINIMUM 75 DEGREES C. CONDUCTORS TERMINATED ON EQUIPMENT OR DEVICES WITH A LOWER RATING (60 DEGREES C) OR NO RATING SHOWN, SHALL HAVE CONDUCTOR SIZE INCREASED TO CONFORM TO NEC TABLE 310-16 AND U.L. NO. 489 REQUIREMENTS.

10. DISCONNECT SWITCHES SHALL BE HEAVY-DUTY, QUICK-MAKE, QUICK-BREAK TYPE, NEMA 1 ENCLOSURE FOR INDOOR LOCATIONS (NEMA 3R FOR OUTDOOR LOCATIONS). SWITCHES SHALL BE AS MANUFACTURED BY SQUARE D, GENERAL ELECTRIC, OR CUTLER-HAMMER. PROVIDE FUSES AS MANUFACTURED BY BUSSMAN, GOULD-SHAWMUT, OR LITTLE-FUSE. ALL CONDUCTOR TERMINALS TO BE U.L. LISTED FOR A MINIMUM OF 75 DEGREES C. SWITCHES USED AS SERVICE ENTRANCE EQUIPMENT TO BE U.L. LISTED AS "SER" RATED EQUIPMENT.

11. PANELBOARDS SHALL BE AS MANUFACTURED BY SQUARE D, GENERAL ELECTRIC, CUTLER-HAMMER OR EATON CORP. MEETING U.L. STANDARDS 50 AND 67, WITH U.L. LABEL. PANELS USED AS SERVICE ENTRANCE EQUIPMENT TO BE U.L. LISTED AS "SER" RATED EQUIPMENT. BUS BARS SHALL BE COPPER.

12. BREAKERS: THERMAL MAGNETIC TYPE, QUICK-MAKE, QUICK-BREAK, BOLT-IN TYPE OF SINGLE UNIT CONSTRUCTION. TWO AND THREE POLE BREAKERS SHALL BE SINGLE UNIT COMMON TRIP TYPE. BREAKERS USED AS SWITCHES FOR 120V LIGHTING CIRCUITS SHALL BE APPROVED FOR THAT USE AND MARKED "SWD". ALL BREAKERS FOR HVAC AND REFRIGERATION EQUIPMENT SHALL BE "HACR" RATED BREAKERS.

13. CABINETS SHALL BE ONE PIECE CODE GAUGE GALVANIZED STEEL WITH MOUNTING STUDS, WIRING GUTTERS OF AMPLE SIZE AND KNOCKOUT FOR CONDUIT CONNECTIONS AS REQUIRED. BUS BARS SHALL BE 98 PER CENT CONDUCTIVE COPPER, ALUMINUM, OR COPPER-CLAD ALUMINUM. FRONTS SHALL BE ONE PIECE CODE GAUGE FURNITURE STEEL WITH ADJUSTABLE FASTENERS. PROVIDE A PLASTIC COVERED TYPEWRITTEN SCHEDULE IDENTIFYING ALL BRANCH CIRCUITS INSIDE EACH CABINET. RECESSED CABINETS TO BE INSTALLED WITH A MINIMUM (2) 3/4" SPARE CONDUITS STUBBED UP TO ACCESSIBLE CEILING SPACE.

14. GROUNDING SYSTEM: PERMANENTLY AND EFFECTIVELY GROUND ALL METALLIC CONDUIT, SUPPORTS, CABINETS, PANELBOARDS AND SYSTEM NEUTRAL CONDUCTORS. MAINTAIN CONTINUITY OF EQUIPMENT GROUND THROUGHOUT THE SYSTEM. GROUND CLAMPS SHALL BE APPROVED TYPE, SPECIFICALLY DESIGNED FOR GROUNDING. WHERE GROUNDING CONDUCTOR IS ENCLOSED IN CONDUIT, GROUND CLAMP SHALL BE OF A TYPE WHICH GROUNDS BOTH CONDUCTOR AND CONDUIT. ALL CIRCUITS INFLEXIBLE METAL OR PLASTIC CONDUIT SHALL INCLUDE A GROUND WIRE SIZED IN ACCORDANCE WITH NATIONAL ELECTRICAL CODE.

15. CONDUIT SHALL BE SIZED TO COMPLY WITH NEC FOR NUMBER AND SIZE OF CONDUCTORS INSTALLED, MINIMUM 24" BELOW GRADE. PROVIDE SCHEDULE 40 PVC PLASTIC OR RIGID STEEL CONDUIT BELOW GRADE, MINIMUM 3/4". PROVIDE ELECTRICAL METAL TUBING (EMT) MEETING FS W-C563, OR FLEXIBLE CONDUIT (IN LENGTHS 6' OR LESS) FOR INTERIOR LOCATIONS. EMT CONNECTORS AND COUPLING SHALL BE SET-SCREW TYPE. CLAMP CONDUIT TO BOXES WITH BUSHING INSIDE AND LOCKNUT OUTSIDE. 'MC' CABLE ACCEPTABLE FOR CONCEALED INSTALLATIONS.

16. ALL CONDUIT AND RACEWAY SYSTEMS TO BE INSTALLED WITH SEPARATE GROUND CONDUCTOR. CONDUIT SYSTEM IS NOT TO BE USED AS THE SOLE GROUNDING MEANS.

17. ALL SWITCHBOARDS, PANELBOARDS, DISCONNECT SWITCHES, AND CONTACTORS, SHALL BE PROVIDED WITH LUGS LABELED AND RATED FOR A MINIMUM 75 DEGREES C. SWITCHBOARDS, PANELBOARDS, DISCONNECT SWITCHES, CONTACTORS, AND TRANSFORMERS ARE TO BE "LISTED" AND "IDENTIFIED" AS RATED FOR A MINIMUM OF 75 DEGREES C CONDUCTOR TERMINATION.

18. CONDUCTORS: INSULATED SOFT ANNEALED 98 PER CENT PURE COPPER WITH COLOR CODING, B AND S GAUGE, #10 AND SMALLER TO BE SOLID, #8 AND LARGER TO BE STRANDED, MINIMUM #12 UNLESS OTHERWISE INDICATED. ALUMINUM CONDUCTOR WILL NOT BE ALLOWED. THHN MAY NOT BE USED UNDERGROUND, AT SERVICE ENTRANCE, OUTSIDE, OR IN WET LOCATIONS. ALL INSULATION TO BE RATED FOR 600 V AND TYPES AS FOLLOWS:

#10 AND SMALLER: THWN OR THHN
#8 TO #4/0: THWN OR THHN
SERVICE ENTRANCE: USE-RHW
OVER #4/0 ORDINARY SERVICE: THHN OR XHHN
OVER #4/0 WET OR HOT SERVICE: XHHW
WIRE THRU FLUORESCENT FIXTURES OR WITHIN 3' OF HEATING EQUIPMENT: THHN

19. DEVICES SHALL BE MANUFACTURED BY LEVITON "COMMERCIAL SPECIFICATION GRADE" OR EQUAL. ALL DEVICES AND COVER PLATES SHALL BE WHITE. STANDARD DUPLEX RECEPTACLES SHALL BE GROUNDING TYPE, 20A, NEMA WD-2 STANDARD 5-20R, SIDE WIRED, LEVITON #5342. LIGHT SWITCHES SHALL BE 20 AMP, 120 VOLT, LEVITON #1221-2. WHERE SWITCHES ARE GROUPED, PROVIDE GANG PLATES.

20. LIGHT FIXTURES AND LAMPS ARE FURNISHED AND INSTALLED BY ELECTRICAL CONTRACTOR ACCORDING TO U.B.C. STANDARDS,

22. THE ELECTRICAL CONTRACTOR SHALL REVIEW MATERIALS AT THE TIME OF DELIVERY AND IMMEDIATELY REPORT ANY DAMAGE OR MISSING PIECES.

23. EMERGENCY LIGHTING SHALL HAVE A MINIMUM OF 90 MIN. BATTERY BACK-UP, OR AS REQUIRED BY LOCAL CODE AUTHORITY.

24. LAYOUT BRANCH CIRCUIT WIRING AND ARRANGEMENT OF HOME RUNS FOR MAXIMUM ECONOMY AND EFFICIENCY. INCREASE WIRE SIZE IF VOLTAGE DROP EXCEEDS 3 PER CENT OR 100 FEET OF LENGTH.

25. CONCEAL WIRING SYSTEM ABOVE SUSPENDED CEILINGS OR IN WALL OR FLOOR CONSTRUCTION WHERE POSSIBLE. INSTALL CONDUITS PARALLEL TO BUILDING LINES, AND TO CLEAR ALL OPENING, DEPRESSIONS, PIPES, DUCTS, STRUCTURE, ETC.

26. INSTALL CONDUIT CONTINUOUS BETWEEN BOXES AND CABINETS WITH NO MORE THAN FOUR (4) 90 DEGREE BENDS. SECURELY FASTEN IN PLACE WITH STRAPS, HANGERS AND STEEL SUPPORTS AS REQUIRED. DO NOT SUPPORT CONDUIT FROM SUSPENDED CEILING GRID OR SUSPENSION WIRES. REAM CONDUIT ENDS BEFORE INSTALLATION AND THOROUGHLY CLEAN BEFORE INSTALLATION. OPENINGS SHALL BE PLUGGED OR COVERED TO KEEP CONDUIT CLEAN. TERMINALS ON SWITCHES AND OUTLET SHALL NOT BE USED TO "FEED THRU" TO THE NEXT SWITCH OR OUTLET.

27. ADJUSTING AND TESTING: ALL ELECTRICAL EQUIPMENT SHALL BE ADJUSTED AND TESTED FOR PROPER OPERATION. COMPLETED WIRING SYSTEM SHALL BE FREE FROM SHORT CIRCUITS.

28. TOUCH-UP OR REFINISH DAMAGED SURFACES OF FIXTURES AND EQUIPMENT, EXPOSED TO VIEW.

29. TELEPHONE CABLE TO BE FURNISHED AND INSTALLED BY OTHERS. ALL CABLING TO BE PLENUM RATED. ELECTRICAL CONTRACTOR TO PROVIDE NEW PLYWOOD BACKBOARD FOR NEW TELEPHONE TERMINAL BOARD. COORDINATE EXACT REQUIREMENTS WITH LOCAL TELEPHONE UTILITY REPRESENTATIVE AND OWNER.

30. REFER TO ARCHITECTURAL REFLECTED CEILING PLAN FOR EXACT LOCATION OF LIGHTING FIXTURES AND OTHER CEILING MOUNTED EQUIPMENT.

31. FOR EQUIPMENT FURNISHED BY OWNER OR OTHER CONTRACTORS: ELECTRICAL CONTRACTOR TO VERIFY EXACT LOAD, TYPE OF CONNECTION AND MOUNTING HEIGHT FOR EACH BOX OR EQUIPMENT ITEM TO BE INSTALLED. ALL HARD-WIRED CONNECTIONS TO EQUIPMENT TO BE MADE WITH FLEXIBLE LIQUID-TITE METAL CONDUIT WITH GREEN GROUND CONDUCTOR INSTALLED INSIDE RACEWAY. GROUND CONDUCTOR TO BE BONDED AT BOTH ENDS.

32. CONTACTORS SHALL BE SQUARE D, CLASS 8903, AS SHOWN ON THE PLANS, ELECTRICALLY OR MECHANICALLY HELD, DESIGNED FOR TWO-WIRE CNTRL CIRCUIT, FULLY RATED FOR ALL CLASSES OF INDUCTIVE AND NON-INDUCTIVE LOADS, AND RATED FOR CONTINUOUS CAPACITY AND POWER CIRCUIT VOLTAGE NOT LESS THAN INDICATED ON DRAWINGS. PROVIDE WITH NUMBER OF POLES INDICATED OR SPECIFIED. CONTACTORS SHALL BE FURNISHED WITH NEMA 1, SURFACE MOUNTED ENCLOSURES UNLESS CALLED FOR OTHERWISE ON DRAWINGS. EACH CONTACTOR SHALL BE PROVIDED WITH ENGRAVED LAMINATED PLASTIC NAMEPLATE WITH BLACK BACKGROUND AND 1/4" WHITE LETTERS TO DESIGNATE USE OF CONTRACTOR.

33. FIRE ALARM SYSTEM SHALL BE AN ADDRESSABLE SYSTEM, MULTIPLXD SIGNAL TRANSMISSION, DEDICATED TO FIRE-ALARM SERVICE ONLY. INSTALLER SHALL BE NICET CERTIFIED. A UL LISTED SYSTEM FROM ONE OF THE FOLLOWING MANUFACTURER'S SHALL BE UTILIZED:

NOTIFIER; A HONEYWELL COMPANY
GAMEWELL; A HONEYWELL COMPANY
SILENT KNIGHT; A HONEYWELL COMPANY
SIMPLEX GRINNELL; A TYCO COMPANY
SIEMENS BUILDING TECHNOLOGIES, FIRE SAFETY DIVISION
FEDERAL SIGNAL CORPORATION

34. ALL GFCI PROTECTIVE DEVICES SHALL BE READILY ACCESSIBLE AS IDENTIFIED IN NEC 2020

ELECTRICAL PLUMBING MECHANICAL
TRILOGY ENGINEERING
TBPE # F-14307
WWW.TRILOGYENG.COM

CP&Y, INC.
TEXAS REGISTERED ENGINEERING FIRM
TBPE F-1741

STATE OF TEXAS
BRADLEY K. KROLL
110044
LICENSED
PROFESSIONAL ENGINEER
4-14-23

NO.	REVISION	BY	DATE

VERIFY SCALE
0 1"
BAR LENGTH EQUALS ONE INCH ON ORIGINAL DRAWING. VERIFY LENGTH ON THIS SHEET AND ADJUST SCALE ACCORDINGLY.

CITY OF WACO
4TH STREET PEDESTRIAN IMPROVEMENTS

DESIGN: 2318
DRAWN: AH
REVIEW: BK
CP&Y:
CLIENT:

SHEET
E1.1

single phase panel blank.xls

PANELBOARD NO: A

SECTION:	1 OF 1	VOLTAGE:	240/120	ENGINEER:	Brad Kroll P.E.
MOUNTING:	SURFACE	PHASE:	1	BUS:	200
POLES:	12	WIRE:	3	MAIN:	200 M.C.B
LOCATION:	ELECT. CLOSET	GROUND BUS:	YES	INTERRUPTING RATING:	
		200% NEUTRAL:	NO	ELECTRONIC GRADE PANEL:	NO
				ISOLATED GROUND BUS:	NO

CKT NO.	DESCRIPTION	LOAD (VA) LTS	REC	MECH	MISC	CIRCUIT BREAKER AMPS	POLES			CIRCUIT BREAKER AMPS	POLES	LOAD (VA) LTS	REC	MECH	MISC	DESCRIPTION	CKT NO
1	MAIN BREAKER					60	2	A		20	1						2
3									B	20	1						4
5	LIGHTING CONTROL	500				20	1	A		20	1						6
7	EQUIPMENT RECP.		180			20	1		B	20	1						8
9	LIGHTING	975				20	1	A		20	1						10
11	IRRIGATION		500			20	1		B	20	1						12

PANELBOARD NO: A

Note: * Indicates circuit breaker shall be GFCI

NOTE 1: PROVIDE 'LOCK ON' DEVICE FOR C.B.

	LTS	REC	MECH	MISC		LTS	REC	MECH	MISC	
SUBTOTAL CONNECTED KVA	1.5	0.7	0.0	0.0		0.0	0.0	0.0	0.0	SUBTOTAL CONNECTED KVA
						1.5	0.7	0.0	0.0	TOTAL CONNECTED KVA

PHASE BALANCE

	LTS	REC	MECH	MISC	TOTAL	% DIF
PHASE A CONNECTED KVA	1.5	0.0	0.0	0.0	1.5	105.3
PHASE B CONNECTED KVA	0.0	0.7	0.0	0.0	0.7	-5.3
AVERAGE PHASE CONNECTED KVA					0.7	

LOAD SUMMARY & FEEDER CALCULATION

LTS	REC	MECH	MISC	SUBTOT	SPARE	TOTAL	
1.5	0.7	0.0	0.0	2.2	0		CONNECTED KVA
1.0	#1	1.0	1.0		%		DEMAND FACTOR
1.5	0.7	0.0	0.0	2.2	0.0	2.2	DEMAND KVA
						9.0	DEMAND AMPS
1.25	1.0	1.0	1.0		1.0		CONTINUOUS / NON-CONTINUOUS FACTOR
						0.80	ADJUSTMENT FACTOR
						1.00	CORRECTION FACTOR (OTHER THAN 30 DEG C)
						10.5	MIN. OVERCURRENT DEVICE AMPS
						10.5	MIN. COND. AMPS PER TERMINATION RATING
						11.2	MIN. COND. AMPS PER INSULATION RATING

LIGHT FIXTURE TYPE "A"

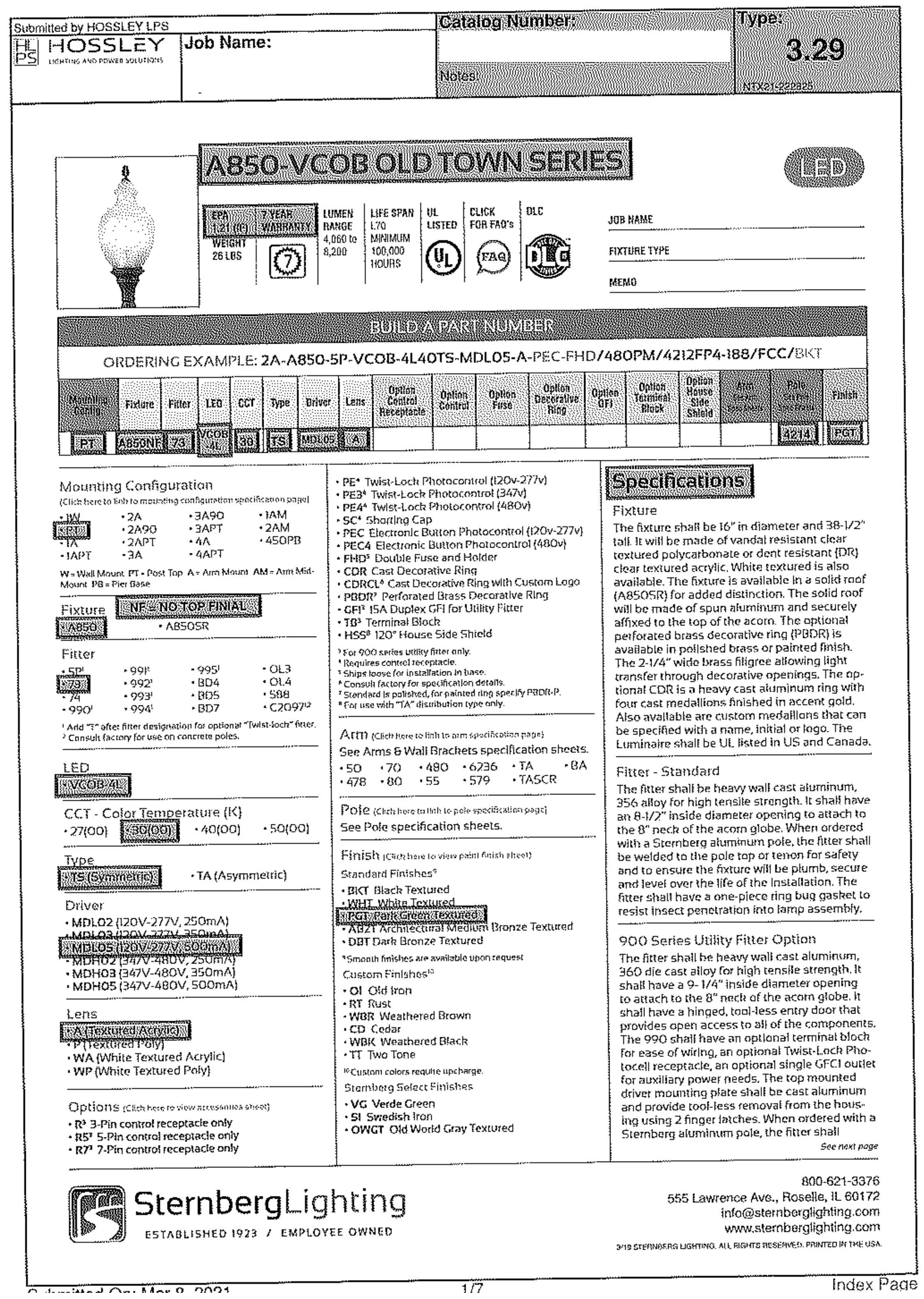

Submitted by HOSSLEY LPS

HOSSLEY LIGHTING AND POWER SOLUTIONS

Job Name:

Catalog Number:

Notes:

Type: 3.29

NTX21-222825

A850-VCOB OLD TOWN SERIES

LED

EPA 1.21 (ft²) · 7 YEAR WARRANTY · WEIGHT 26 LBS · LUMEN RANGE 4,060 to 8,200 · LIFE SPAN L70 MINIMUM 100,000 HOURS · UL LISTED · CLICK FOR FAQ's · DLC

JOB NAME

FIXTURE TYPE

MEMO

BUILD A PART NUMBER

ORDERING EXAMPLE: 2A-A850-5P-VCOB-4L40TS-MDL05-A-PEC-FHD/480PM/4212FP4-188/FCC/BKT

Mounting Config	Fixture	Fitter	LED	CCT	Type	Driver	Lens	Option Control Receptacle	Option Control	Option Fuse	Option Decorative Ring	Option GFI	Option Terminal Block	Option House Side Shield	Arm	Pole	Finish
PT	A850NF	73	VCOB 4L	30	TS	MDL05	A									4214	PGT

Mounting Configuration

Fixture: NF = NO TOP FINIAL

Specifications

Fixture

The fixture shall be 16" in diameter and 38-1/2" tall. It will be made of vandal resistant clear textured polycarbonate or dent resistant (DR) clear textured acrylic. White textured is also available. The fixture is available in a solid roof (A850SR) for added distinction. The solid roof will be made of spun aluminum and securely

SternbergLighting

ESTABLISHED 1923 / EMPLOYEE OWNED

800-621-3376
555 Lawrence Ave., Roselle, IL 60172
info@sternberglighting.com
www.sternberglighting.com

1/7 Index Page

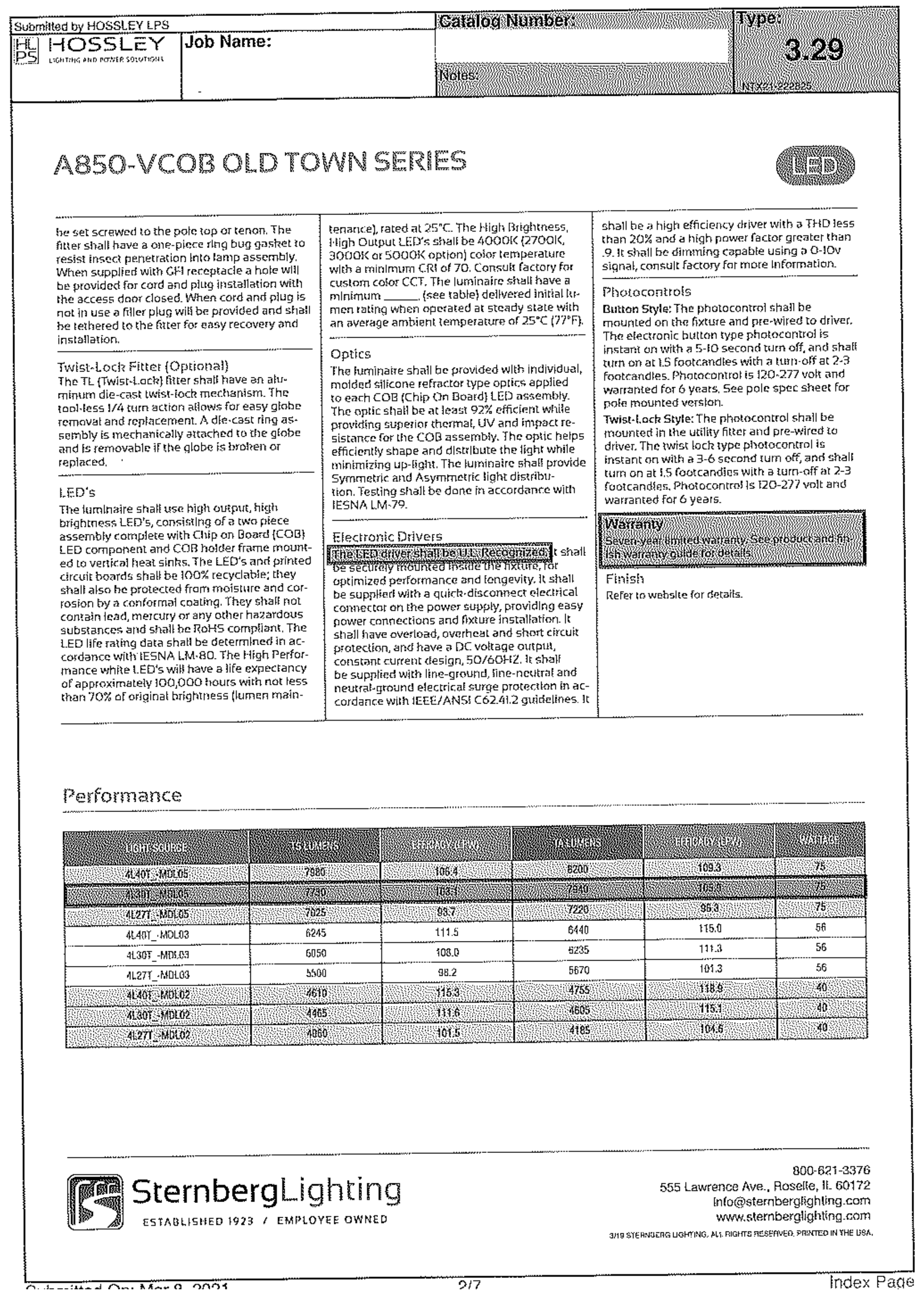

Submitted by HOSSLEY LPS

HOSSLEY

Job Name:

Catalog Number:

Notes:

Type: 3.29

A850-VCOB OLD TOWN SERIES

LED

Performance

SternbergLighting

ESTABLISHED 1923 / EMPLOYEE OWNED

800-621-3376
555 Lawrence Ave., Roselle, IL 60172
info@sternberglighting.com
www.sternberglighting.com

2/7 Index Page

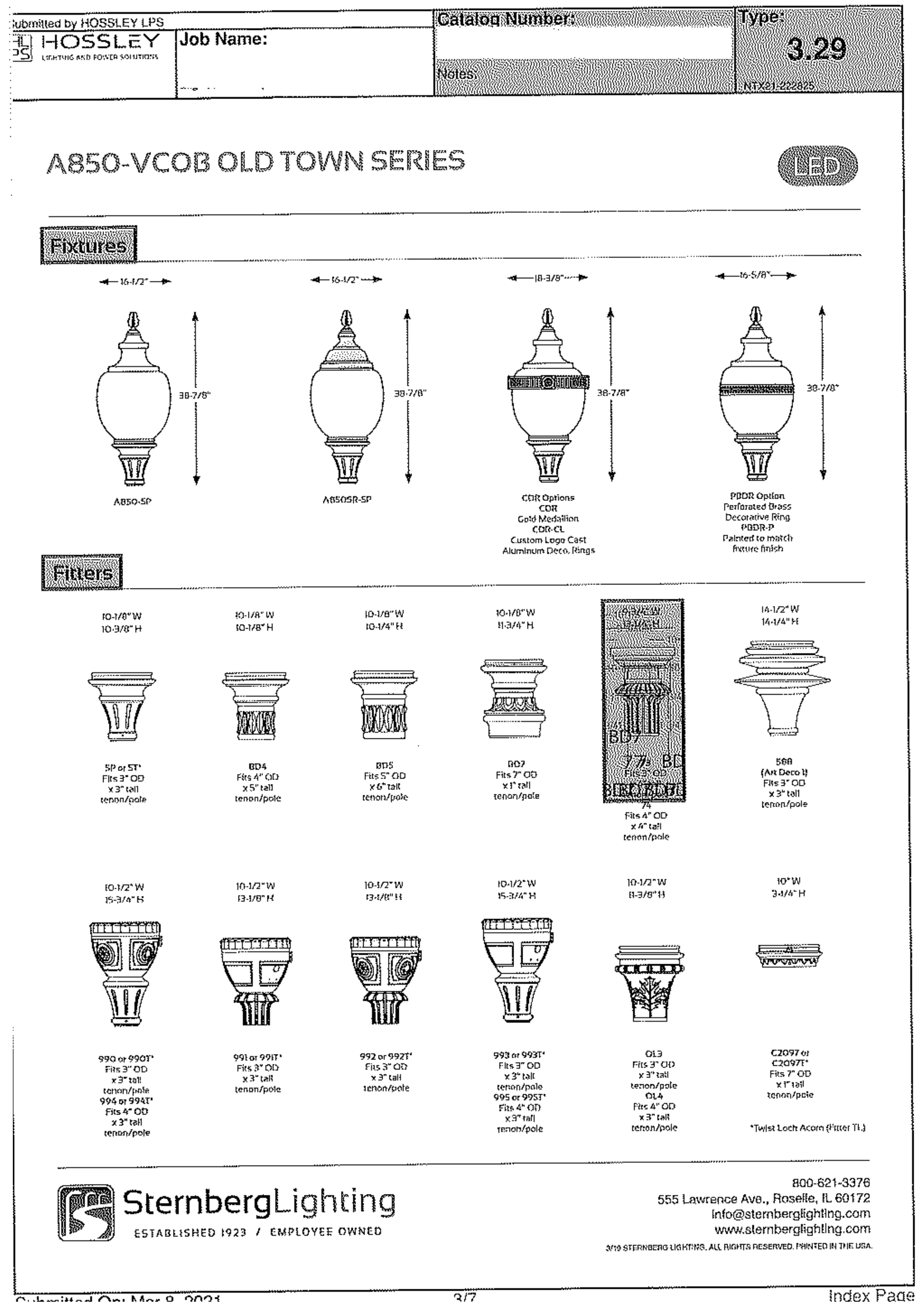

Submitted by HOSSLEY LPS

HOSSLEY

Job Name:

Catalog Number:

Notes:

Type: 3.29

A850-VCOB OLD TOWN SERIES

LED

Fixtures

Fitters

SternbergLighting

ESTABLISHED 1923 / EMPLOYEE OWNED

800-621-3376
555 Lawrence Ave., Roselle, IL 60172
info@sternberglighting.com
www.sternberglighting.com

3/7 Index Page

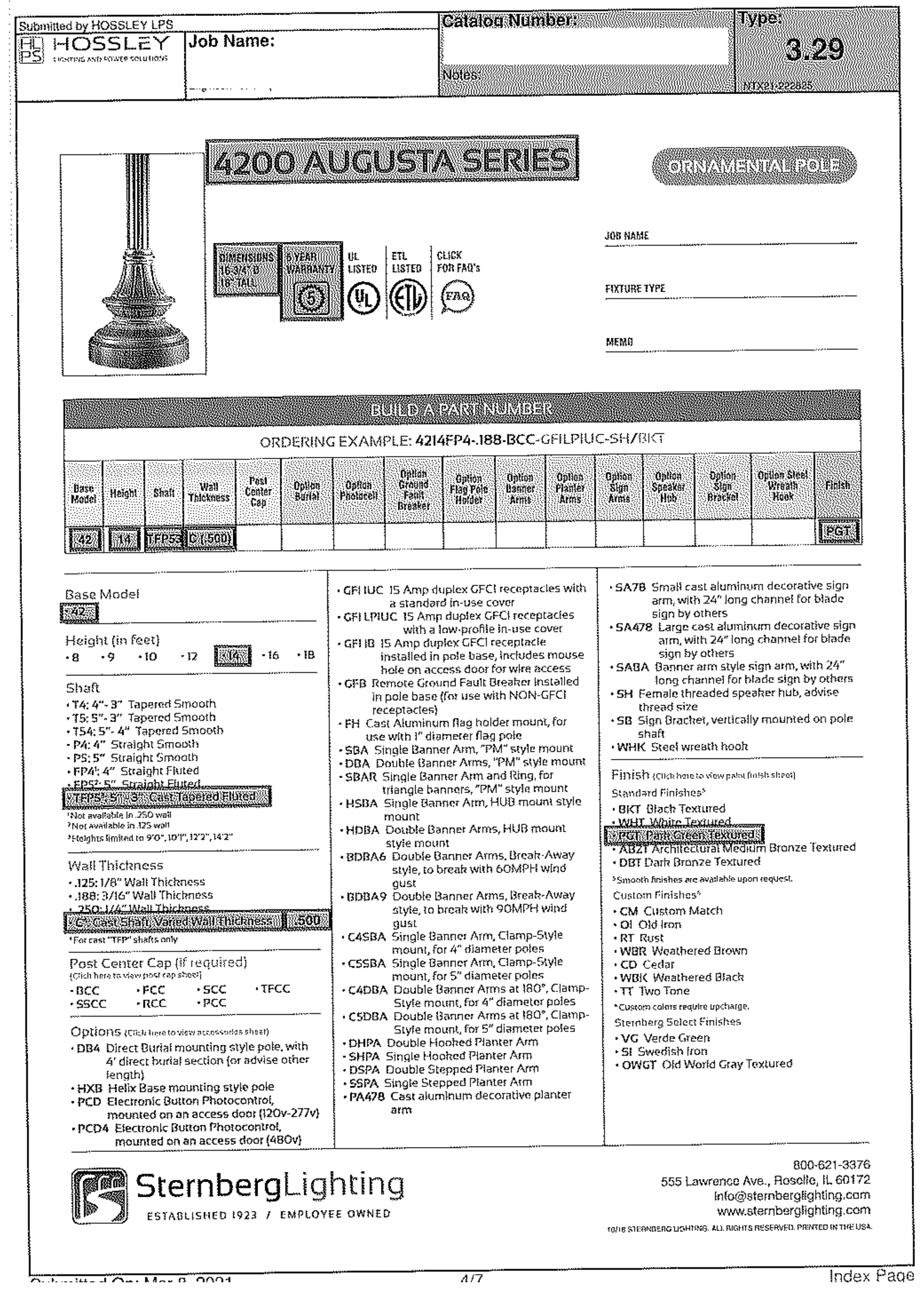

Submitted by HOSSLEY LPS

HOSSLEY LIGHTING AND POWER SOLUTIONS

Job Name:

Catalog Number:

Notes:

Type: 3.29

NTX21-222825

4200 AUGUSTA SERIES

ORNAMENTAL POLE

DIMENSIONS 16-3/4" D 18" TALL · 5 YEAR WARRANTY · UL LISTED · ETL LISTED · CLICK FOR FAQ's

JOB NAME

FIXTURE TYPE

MEMO

BUILD A PART NUMBER

ORDERING EXAMPLE: 4214FP4-.188-BCC-GFILPIUC-SH/BKT

Base Model	Height	Shaft	Wall Thickness	Post Center Cap	Option Burial	Option Photocell	Option Ground Fault Breaker	Option Flag Pole Holder	Option Banner Arms	Option Planter Arms	Option Sign Arms	Option Speaker Hub	Option Sign Bracket	Option Steel Wreath Hook	Finish
42	14	TFP53	C (.500)												PGT

Base Model
- 42

Height (in feet)
- 8 · 9 · 10 · 12 · 14 · 16 · 18

Shaft

- GFI IUC 15 Amp duplex GFCI receptacles with a standard in-use cover
- GFI LPIUC 15 Amp duplex GFCI receptacles with a low-profile in-use cover
- GFI IB 15 Amp duplex GFCI receptacle installed in pole base, includes mouse hole on access door for wire access
- GFB Remote Ground Fault Breaker installed in pole base

- SA78 Small cast aluminum decorative sign arm, with 24" long channel for blade sign by others
- SA478 Large cast aluminum decorative sign arm, with 24" long channel for blade sign by others
- SABA Banner arm style sign arm, with 24" long channel for blade sign by others
- SH Female threaded speaker hub, advise

SternbergLighting

ESTABLISHED 1923 / EMPLOYEE OWNED

800-621-3376
555 Lawrence Ave., Roselle, IL 60172
info@sternberglighting.com
www.sternberglighting.com

10/18 STERNBERG LIGHTING. ALL RIGHTS RESERVED. PRINTED IN THE USA.

4/7 Index Page

CP&Y, INC.
TEXAS REGISTERED ENGINEERING FIRM
TBPE F-1741

BRADLEY L. KROLL
110044
4-14-23

NO.	REVISION	BY	DATE

VERIFY SCALE 0 1"

BAR LENGTH EQUALS ONE INCH ON ORIGINAL DRAWING. VERIFY LENGTH ON THIS SHEET AND ADJUST SCALE ACCORDINGLY.

CITY OF WACO
4TH STREET PEDESTRIAN IMPROVEMENTS

DESIGN:	2318
DRAWN:	AH
REVIEW:	BK
CP&Y:	
CLIENT:	

TRILOGY ENGINEERING
ELECTRICAL · PLUMBING · MECHANICAL
TBPE # F-14307
WWW.TRILOGYENG.COM

SHEET
E1.2

ANTIQUE/SHOEBOX LIGHT & ASSOC. ITEMS SPECS. (LED)

1.0 LIGHTING POLES AND FIXTURES:
THE LIGHTING POLES FURNISHED FOR MOUNTING LUMINARIES SHALL BE FREE FROM IMPERFECTIONS AND PRESENT A PLEASING APPEARANCE WHEN PLUMBED AND SECURED TO THE FOUNDATION. THE FINISHED POLE SHALL HAVE A SMOOTH UNIFORM FINISH FREE FROM PITS, SCRATCHES, BLISTERS OR OTHER DEFECTS. EACH SHOE BOX STYLE POLE SHALL HAVE A REMOVABLE POLE CAP. THE MOUNTING HEIGHT SHALL BE AS SPECIFIED PER POLE TYPE. ALL FIXTURES SHALL NOT REQUIRE INDIVIDUAL PHOTOCELLS OR PHOTOCELL SOCKETS. ALL POLES SHALL NOT HAVE FACTORY INSTALLED FUSE HOLDERS, BUT SHALL HAVE EXTERNAL FUSE HOLDERS INSTALLED AT THE BASE OF EACH POLE. ALL ANTIQUE LIGHT POLES AND FIXTURES SHALL HAVE A POWDER COAT PAINT FINISH.

ANTIQUE DECORATIVE POLE AND FIXTURE
THE ANTIQUE LIGHT POLE AND FIXTURE MANUFACTURE AND PART NUMBER:

MANUFACTURE:	ANTIQUE STREET LIGHTING CO.
POLE PART NUMBER:	#PI C17 14A DGRH
FIXTURE PART NUMBER:	#A25 W INC MOG ACT 120 DGRH
COLOR CODE:	POWDER COAT PAINT COLOR DGRH = # RAL 6012 (BLACK GREEN)
LAMP:	PRUF 35W (#211-03) (120-277 V) DAY WHITE

SHOE BOX TYPE AREA LIGHTING POLE AND FIXTURE (PARKING LOTS ONLY)
THE SHOE BOX TYPE LIGHT POLE AND FIXTURE MANUFACTURE PART NUMBER:

COLOR CODE:	POWDER COAT PAINT COLOR # RAL 8019 (BLACK GREEN)
POLE MANUFACTURE:	KW POLE OR APPROVAL EQUAL
POLE PART NUMBER:	SINGLE FIXTURE #SSP30-6.0-7-BRZ DM10 WITH 2 IN. X 12 IN. HORIZONTAL PIPE TENON MOUNT
FIXTURE MANUFACTURE:	DURALIGHT OR APPROVED EQUAL*
FIXTURE PART NUMBER:	# JXM-ST110 - LED COBRA HEAD, 120-277 VOLT # JXM-ST110 - LED COBRA HEAD, 480 VOLT

* FIXTURES MUST HAVE BEEN OR BE SUBMITTED TO CITY OF WACO FOR INFIELD TESTING. TESTED AND APPROVED LIGHTS LISTED IN SECTION 1.1.
** ORIGINAL TESTED FIXTURES WERE LED ILLUMINATION 150W, 225W, CURRENT EQUIVALENT.

1.1 TESTED AND APPROVED LED FIXTURES:

250W EQUIVALENT:	400W EQUIVALENT:
EOI 150W (#ESL-02A011S15065A)	DURALIGHT 180W (#JXM-ST180)
PRUF 112W (#230-01)**	PRUF 168W (#240-01)**
LEOTEK 105W (#SL-250WLM3-FX)	LEOTEK 166W (#SL-400WLM3-FX)
	PHILLIPS HADCO EVOLAIRE 130W #WL130N)

2.0 ANCHOR BOLTS:
FOUR HIGH STRENGTH 1 IN. STEEL ANCHOR BOLTS SHALL BE FURNISHED WITH EACH POLE. ANCHOR BOLTS SHALL BE FABRICATED FROM A GOOD COMMERCIAL QUALITY HOT ROLLED CARBON STEEL BAR WITH MINIMUM YIELD STRENGTH OF 50,000 PSI. EACH ANCHOR BOLT SHALL BE THREADED AT THE TOP AND FITTED WITH DOUBLE NUTS AND WASHERS. THE OTHER END OF THE BOLT SHALL HAVE AN "L" BEND. THE ANCHOR BOLTS SHALL BE OF SUFFICIENT LENGTH AND DIAMETER TO DEVELOP THE FULL STRENGTH OF THE SHAFT. THE THREADED END OF THE BOLT SHALL BE GALVANIZED A MINIMUM LENGTH OF 8 IN. FROM THE THREADED END WITH A MINIMUM THREADED LENGTH OF 6 IN. ALL NECESSARY ANCHOR BOLTS AND TEMPLATES FOR SETTING ANCHOR BOLTS SHALL BE FURNISHED IMMEDIATELY AFTER AWARD OF THE CONTRACT, REGARDLESS OF DELIVERY SCHEDULES OF THE POLES. ADDITIONAL HARDWARE SHALL BE PROVIDED AND MAY BE DELIVERED WITH THE POLES.

WACO | ENGINEERING DIVISION | REVISIONS: NO. | COMMENTS | BY | DATE; ## | DESCRIPTION | FL | MM/DD/YYYY | DATE 07/01/2022 | T-2A

ANTIQUE/SHOEBOX LIGHT & ASSOC. ITEMS SPECS. (LED)

3.0 PHOTOELECTRIC CONTROL:
THE PHOTOELECTRIC CELLS SHALL BE TWIST PLUG IN TYPE PRECISION BRAND TO MATCH FIXTURE OR CONTACTOR VOLTAGE.

4.0 ELECTRICAL SERVICE EQUIPMENT:
ELECTRICAL SERVICE EQUIPMENT SHALL INCLUDE, BUT NOT BE LIMITED TO; METERED SERVICE/DISCONNECT OR CONTACTOR ENCLOSURE. ALL ENCLOSURES HOUSING ELECTRICAL EQUIPMENT SHALL BE RAIN-TIGHT, INCLUDE A PADLOCK HANDLE, AND DESIGNED FOR OUTDOOR INSTALLATION IN ACCORDANCE WITH NEMA STANDARDS. THE LIGHTING INSTALLATIONS SHALL COMPLY WITH THE APPLICABLE PROVISIONS OF THE NATIONAL ELECTRICAL SAFETY CODE AND NATIONAL ELECTRIC MANUFACTURERS ASSOCIATION SPECIFICATIONS. A STANDALONE, PEDESTAL TYPE COMBINATION METERED SERVICE/DISCONNECT/CONTACTOR CONTROL PANEL SHALL BE USED. THE PEDESTAL TYPE METER SERVICE MAY BE MOUNTED TO A CONCRETE PAD, ALTHOUGH A PRE CAST POLYMER PAD BASE IS RECOMMENDED. POWER REQUIREMENTS DESIRED SHOULD BE 120/240V OR 208/120V SINGLE PHASE. IF NOT AVAILABLE, AN OPTIONAL SERVICE VOLTAGE MAY BE ACCEPTABLE IF APPROVED BY CITY STAFF. EACH SERVICE POINT SHALL INCLUDE INDIVIDUAL CIRCUIT BREAKERS AND PHOTOCELL CONTROLLED CONTACTOR(S), AND A HOA SWITCH FOR CONTROL OF THE LIGHTING CIRCUIT(S). METER SERVICES SHALL REQUIRE A NO FEE ELECTRICAL PERMIT AND BE INSPECTED BY CITY OF WACO INSPECTION SERVICES. ELECTRIC METER APPLICATION FOR SERVICE WILL BE MADE BY CITY STAFF. THE COLOR OF THE ELECTRICAL SERVICE EQUIPMENT SHALL BE MANUFACTURES STANDARD LIGHT OR MINT GREEN.

RECOMMENDED, ONCOR APPROVED, SERVICE PEDESTALS ARE MILBANK BRAND.

5.0 WIRE:
ALL ELECTRICAL WIRE SHALL BE STRANDED COPPER CONDUCTOR. EARTH GROUND SHALL BE STRANDED COPPER CONDUCTOR WITH GREEN INSULATION. ALL WIRE SHALL BE OF ADEQUATE SIZE TO ACCOMMODATE LIGHTING LOAD. ALL SPLICES SHALL BE MADE INSIDE THE POLE. MINIMUM CONDUCTOR SIZE SHALL BE 10 AWG.

6.0 CONCRETE:
SEE STANDARD DETAIL G-7 GENERAL CONCRETE AND REINFORCEMENT NOTES.

7.0 FOUNDATION BASE
ALL FOUNDATION BASES SHALL BE (24) TWENTY-FOUR INCHES IN DIAMETER. TOP OF BASES SHALL EXTEND (6) SIX INCHES ABOVE GRADE. TOP OF FOUNDATION SHALL HAVE A 1 IN. CHAMFER. STEEL REBAR SHALL BE USED TO FOR CONCRETE REINFORCEMENT THROUGHOUT THE ENTIRE BASE. ALL FOUNDATIONS SHALL HAVE A MINIMUM OF TWO 2 IN. PVC CONDUITS INSTALLED. FOUNDATION SHALL BE POSITIONED WITH OUTSIDE EDGE A MINIMUM OF 2 FT. FROM BACK OF CURB.

- FOR AREA LIGHTING POLES IN EXCESS OF (18) EIGHTEEN FEET IN HEIGHT, BASES SHALL EXTEND A MINIMUM OF (6) SIX FEET BELOW GRADE.
- FOR DECORATIVE POLES NOT TO EXCEED (18) EIGHTEEN FEET, BASES SHALL EXTEND A MINIMUM OF (3) THREE FEET BELOW GRADE.

EXCEPTION: FOR PARKING LOT INSTALLATIONS, ALL BASES SHALL BE (30) THIRTY INCHES IN DIAMETER AND EXTEND A MINIMUM OF (36) THIRTY-SIX INCHES ABOVE GRADE. BELOW GRADE SPECIFICATIONS SHALL REMAIN AS STATED ABOVE.

DISCLAIMER: THE USE OF THIS STANDARD IS GOVERNED BY THE "TEXAS ENGINEERING PRACTICE ACT". NO WARRANTY OF ANY KIND IS MADE BY THE CITY OF WACO FOR ANY PURPOSE WHATSOEVER. THE CITY OF WACO ASSUMES NO RESPONSIBILITY FOR THE CONVERSION OF THIS STANDARD TO OTHER FORMATS OR FOR INCORRECT RESULTS OR DAMAGES RESULTING FROM ITS USE.

WACO | ENGINEERING DIVISION | REVISIONS: NO. | COMMENTS | BY | DATE; ## | DESCRIPTION | FL | MM/DD/YYYY | DATE 07/01/2022 | T-2B

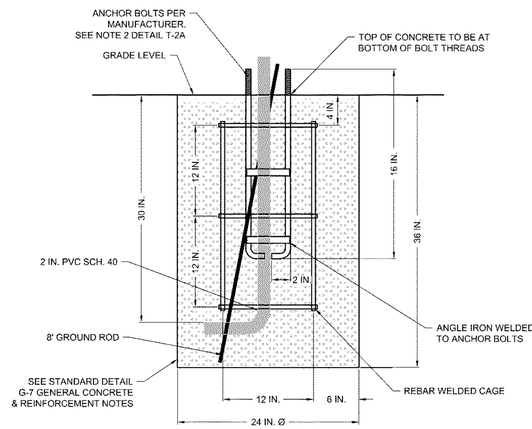

SECTION VIEW

ANTIQUE STREET LIGHT REINFORCED FOUNDATION
(NO SCALE)

DISCLAIMER: THE USE OF THIS STANDARD IS GOVERNED BY THE "TEXAS ENGINEERING PRACTICE ACT". NO WARRANTY OF ANY KIND IS MADE BY THE CITY OF WACO FOR ANY PURPOSE WHATSOEVER. THE CITY OF WACO ASSUMES NO RESPONSIBILITY FOR THE CONVERSION OF THIS STANDARD TO OTHER FORMATS OR FOR INCORRECT RESULTS OR DAMAGES RESULTING FROM ITS USE.

WACO | ENGINEERING DIVISION | REVISIONS: NO. | COMMENTS | BY | DATE; ## | DESCRIPTION | FL | MM/DD/YYYY | DATE 07/01/2022 | T-3

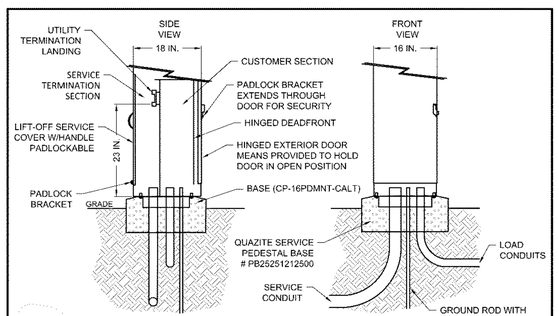

TYPICAL CONSTRUCTION & INSTALLATION DETAILS

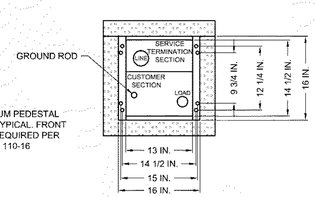

MOUNTING BASE DETAIL TOP VIEW

MILBANK SERVICE PEDESTAL
CP3B IN.ML IN. SERIES
(NO SCALE)

DISCLAIMER: THE USE OF THIS STANDARD IS GOVERNED BY THE "TEXAS ENGINEERING PRACTICE ACT". NO WARRANTY OF ANY KIND IS MADE BY THE CITY OF WACO FOR ANY PURPOSE WHATSOEVER. THE CITY OF WACO ASSUMES NO RESPONSIBILITY FOR THE CONVERSION OF THIS STANDARD TO OTHER FORMATS OR FOR INCORRECT RESULTS OR DAMAGES RESULTING FROM ITS USE.

WACO | ENGINEERING DIVISION | REVISIONS: NO. | COMMENTS | BY | DATE; ## | DESCRIPTION | FL | MM/DD/YYYY | DATE 07/01/2022 | T-5

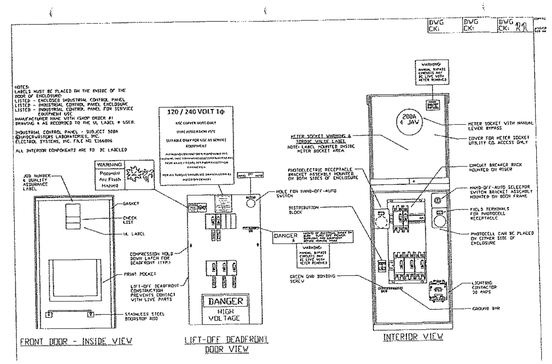

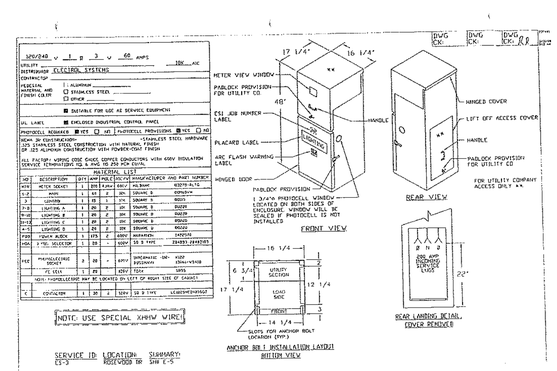

CP&Y, INC.
TEXAS REGISTERED ENGINEERING FIRM
TBPE F-1741

4-14-23

NO.	REVISION	BY	DATE
	BAR LENGTH EQUALS ONE INCH ON ORIGINAL DRAWING. VERIFY LENGTH ON THIS SHEET AND ADJUST SCALE ACCORDINGLY.		

VERIFY SCALE 0 1"

CITY OF WACO
4TH STREET PEDESTRIAN IMPROVEMENTS

DESIGN:	2318
DRAWN:	AH
REVIEW:	BK
CP&Y:	
CLIENT:	

TRILOGY ENGINEERING
ELECTRICAL · PLUMBING · MECHANICAL
TBPE # F-14307
WWW.TRILOGYENG.COM

SHEET
E1.3

ELECTRICAL NOTES BY SYMBOL	
E1	NEW ELECTIRCAL PULL BOX AND CONDUIT
E2	PROVIDE NEW ELECTRICAL MILBANK "CP3B"
E3	PROVIDE POWER TO NEW IRRIGATION CONTROL PANEL

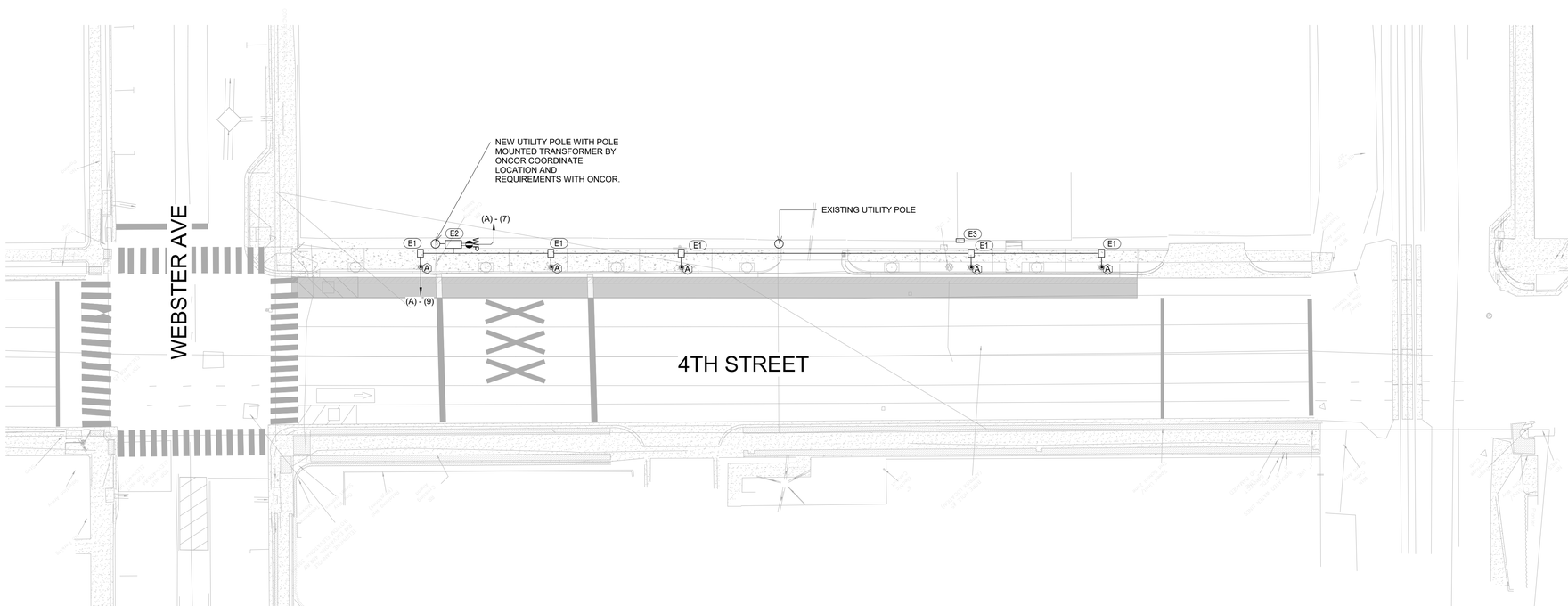

1 POWER FLOOR PLAN
N.T.S

CP&Y, INC.
TEXAS REGISTERED ENGINEERING FIRM
TBPE F-1741

STATE OF TEXAS
BRADLEY L. KROLL
110044
LICENSED
PROFESSIONAL ENGINEER
4-14-23

NO.	REVISION	BY	DATE

VERIFY SCALE 0 1"
BAR LENGTH EQUALS ONE INCH ON ORIGINAL DRAWING. VERIFY LENGTH ON THIS SHEET AND ADJUST SCALE ACCORDINGLY.

CITY OF WACO
4TH STREET PEDESTRIAN IMPROVEMENTS

DESIGN:	2318
DRAWN:	AH
REVIEW:	BK
CP&Y:	
CLIENT:	

TRILOGY ENGINEERING
ELECTRICAL PLUMBING MECHANICAL
TBPE # F-14307
WWW.TRILOGYENG.COM

SHEET
E2.1

CONSTRUCTION MATERIAL SAMPLING AND TESTING MATRIX - 1 OF 2

Construction Operation	Standard Specifications		Standard Details	Applicable Testing	Frequency of Testing
	Material Specs	Construction Specs			
(Fill) Embankment		Section 1.5, Part 2		Standard Proctor & field densities	Proctor for each material to be used. Densities to be project specific
Excavation & Backfill (Trenching Operations)	Section 4.2, Part 2	Section 4.2, Part 3			
Embedment	Section 4.2, Part 2.A.1, & Part 2.A.2	Section 4.2, Part 3.A.5	G-8 & G-7	Gradations, Atterberg Limits, Standard Proctor, Field Densities	Gradation, Atterberg Limits, and Proctor at beginning of project on material submitted for use and at anytime there is an apparent change in material. Densities to be project specific.
Trench Backfill	Section 4.2, Part 2.A.3	Section 4.2, Part 3.A.5	G-9 & G-7	Gradations, Atterberg Limits, Standard Proctor, Field Densities	Gradation, Atterberg Limits, and Proctor at beginning of project on material submitted for use and at anytime there is an apparent change in material. Densities: 4 in first 100 LF and 2 every additional 500 LF. Additional densities as required if compaction fails to meet specifications.
Flowable Fill (Controlled Low Strength Material)	Section 4.2, Part 2.A.3(f)	Section 4.2, Part 2.A.3(f)	G-9 Note 7 & G-7 Note 3	Consistency, Compressive strength ASTM D4832	Consistency and Compressive Strength every 300 LF of trench backfilled.
Subgrade	Testing - Section 2.6				
Stabilization Determination			ST-2 & ST-4	Atterberg Limits to determine if stabilization is necessary, pH to determine amount of lime needed to stabilize	City Projects: Preliminary determined during design. Every 600 LF maximum along CL of street after mass grading. Subdivisions: Every 600 LF maximum along CL of street after mass grading.
Lime Treatment	Section 2.4, Part 2	Section 2.4, Part 3	ST-2 & ST-4	Gradations, Standard Proctor, Moisture Bias Calculations, Field Densities	Initial gradations performed to determine mixing pattern. Standard Proctor performed on each material that is visibly different. Densities performed at a rate of one per 300 LF of paving for two lanes.
Portland Cement Treatment	Section 2.2.B, Part 2	Section 2.2.B, Part 3		Unconfined Compressive Strength	1 sample per day of operations
Reclamation	Section 2.3.D, Part 2	Section 2.3.D, Part 3		Refer to either Lime Treatment or Portland Cement Treatment	Refer to either Lime Treatment or Portland Cement Treatment
Existing Material		Section 2.2, Part 3		Standard Proctor, Field Densities	Standard Proctor performed on each visibly different material. Densities performed at a rate of one per 300 LF of paving for two lanes.
Base Course	Testing - Section 2.6				
Gravel Base Course	Section 2.3, Part 2	Section 2.3, Part 3		Gradations, Atterberg Limits, Standard Proctor, Field Densities	Gradation, Atterberg Limits, and Proctor at beginning of project on material submitted for use and at any time there is an apparent change in material. Densities to be project specific.
Flexible Base	Section 2.3.B, Part 2	Section 2.3.B, Part 3		Gradations, Atterberg Limits, Standard Proctor, Field Densities	Gradation, Atterberg Limits, and Proctor at beginning of project on material submitted for use and at any time there is an apparent change in material. Densities to be project specific.
Cement Treated Base (Pug Base)	Section 2.3.C, Part 2	Section 2.3.C, Part 3	ST-2	Unconfined Compressive Strength	1 sample per day of operations

WACO

ENGINEERING DIVISION

REVISIONS

NO.	COMMENTS	BY	DATE
1	REVISE STD DETAILS AND FREQ OF TESTING	MZ	02/01/2022
##	DESCRIPTION	FL	MM/DD/YYYY

DATE 01/31/2022

G-1A

CONSTRUCTION MATERIAL SAMPLING AND TESTING MATRIX - 2 OF 2

Construction Operation	Standard Specifications		Standard Details	Applicable Testing	Frequency of Testing
	Material Specs	Construction Specs			
Surface Course	Testing - Section 3.7				
Hot-Mix Asphaltic Concrete Pavement	Section 3.3, Part 2	Section 3.3, Part 3	ST-2, ST-3	Extraction, Gradation, Stability & Flow, Densities	1 sample per day of paving operations. Densities - one per 600 LF of paving.
Portland Cement Concrete Pavement	Section 3.6, Part 2	Section 3.6, Part 3	ST-1, ST-4, ST-6 thru ST-9, G-7	Air Content, Slump, Compressive Strength	1 set of 4 cylinders per 150 CY but no less than 2 sets per day
Concrete	Testing - Section 5.6				
Curb and Gutter	Section 5.1, Part 2 & 3	Section 5.3, Part 3	ST-1, ST-7,ST-15 thru ST-20, G-7	Slump, Compressive Strength	One set of 4 cylinders per placement for the first 5 placements then one set for every other placement thereafter. (max. of 2 sets per day) *Different trucks on the same site at different times of the day constitute different placements.
Drive Approach	Section 5.1, Part 2 & 3	Section 5.4, Part 3	ST-1, ST-23A thru ST-24B, ST-26, G-7	Slump, Compressive Strength	
Valley & Fillet	Section 5.1, Part 2 & 3		ST-1, ST-18, ST-19, G-7	Slump, Compressive Strength	
Sidewalk, Curb Ramps, & Architectural Retaining Walls	Section 5.1, Part 2 & 3	Section 5.4, Part 3	ST-1, SW-1 thru SW-19, SW-21, G-7	Slump, Compressive Strength	
Concrete Lined Channel	Section 5.1, Part 2 & 3		SD-1, SD-14, G-7	Slump, Compressive Strength	
Cast-In-Place Sanitary Sewer Manholes	Section 5.1, Part 2 & 3	Section 4.8, Part 3.A.3	S-5 Note 16, S-13, G-7	Air, Slump, Compressive Strength	
Storm Sewer Manholes	Section 5.1, Part 2 & 3		SD-1, SD-10 thru SD-13 G-7	Air, Slump, Compressive Strength	
Inlets	Section 5.1, Part 2 & 3		SD-1 thru SD-7, G-7	Air, Slump, Compressive Strength	
Concrete Medians	Section 5.1, Part 2 & 3	Section 5.1, Part 3	ST-5, G-7	Slump, Compressive Strength	
Reinforced Concrete Headers	Section 5.1, Part 2 & 3	Section 5.1, Part 3	G-7	Slump, Compressive Strength	
Concrete Steps	Section 5.1, Part 2 & 3	Section 5.1, Part 3	G-7	Slump, Compressive Strength	
Retaining Walls (Structural)	Section 5.1, Part 2 & 3	Section 5.1, Part 3	G-7	Air, Slump, Compressive Strength	One set per placement

WACO

ENGINEERING DIVISION

REVISIONS

NO.	COMMENTS	BY	DATE
1	REVISE STD DETAILS AND FREQ OF TESTING	MZ	02/01/2022
##	DESCRIPTION	FL	MM/DD/YYYY

DATE 01/31/2022

G-1B

CP&Y, INC.
TEXAS REGISTERED ENGINEERING FIRM
TBPE F-1741

STATE OF TEXAS
DAVID L. MAREK
#83327
REGISTERED PROFESSIONAL ENGINEER
4-14-2023

NO.	REVISION	BY	DATE

VERIFY SCALE 0 1"
BAR LENGTH EQUALS ONE INCH ON ORIGINAL DRAWING. VERIFY LENGTH ON THIS SHEET AND ADJUST SCALE ACCORDINGLY

CITY OF WACO
SOUTH 11TH STREET IMPROVEMENTS

CITY OF WACO
GENERAL DETAILS

DESIGN: DLM
DRAWN: CDG
REVIEW: DLM
CP&Y: CWAC2200923
CLIENT:

SHEET
C800

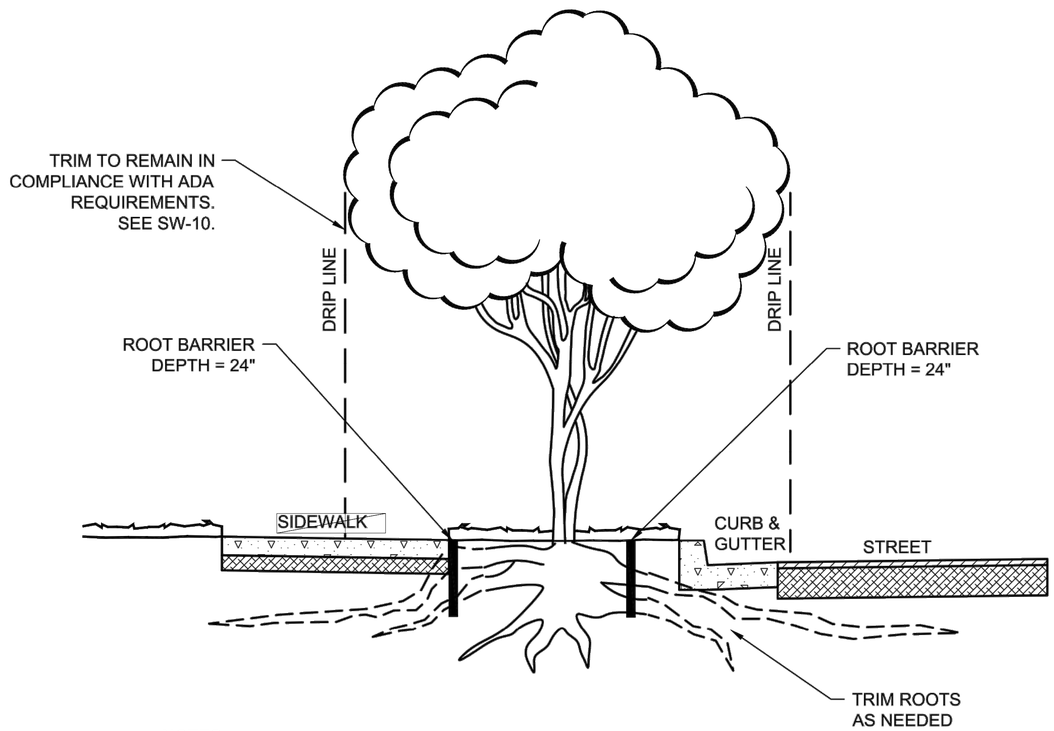

NOTES:

1. TREE ROOT BARRIER MATERIAL SHALL BE 45 MIL EPDM RUBBER LINING (OR PRE-APPROVED EQUAL) AND SHALL EXTEND 15 FEET PAST TREE TRUNK ON EACH SIDE.
2. TREE ROOT BARRIER MATERIAL SHALL BE PLACED 6 INCHES BEHIND BACK OF CURB AND AT THE EDGE OF THE SIDEWALK UNLESS NOTED OTHERWISE IN PLANS.
3. REFER TO PLANS FOR SPECIFIC LOCATIONS OF ROOT BARRIER INSTALLATION.

ROOT BARRIER

(NO SCALE)

WACO

ENGINEERING DIVISION

REVISIONS

NO.	COMMENTS	BY	DATE
##	DESCRIPTION	FL	MM/DD/YYYY

DATE 12/22/2021

G-3

GENERAL CONCRETE & REINFORCEMENT NOTES

GENERAL

1. ALL CONCRETE AND REINFORCEMENT MATERIALS AND PLACEMENT MUST COMPLY WITH SECTION 5.1 OF THE CITY OF WACO STANDARD SPECIFICATIONS FOR CONSTRUCTION.
2. CURING MEMBRANE SHALL BE APPLIED ACCORDING TO MANUFACTURER'S RECOMMENDATIONS.

MATERIALS

3. ALL CONCRETE SHALL BE 3000 PSI, 5 SACK, MIX WITH A MAXIMUM 15% FLY ASH CONTENT; PLACED AT SLUMP VALUES AS SPECIFIED IN SECTION 5.1 PART 3. PARAGRAPH B.
4. ALL REINFORCING STEEL SHALL BE ASTM A 615 GRADE 60, UNLESS OTHERWISE SPECIFIED.

SITE PREPARATION

5. GRADE AND SUBGRADE NEED TO BE ADEQUATELY WATERED, PRIOR TO THE PLACEMENT OF PUG AND PRIOR TO THE PLACEMENT OF CONCRETE.
6. GRADE AND/OR SUBGRADE SHALL BE COMPACTED TO 95% STANDARD PROCTOR DENSITY AT ±2% OPTIMAL MOISTURE CONTENT.

REINFORCING STEEL

7. CONSTRUCTION VEHICLES SHALL NOT DRIVE ON REINFORCEMENT.
8. REINFORCING STEEL SHALL BE PLACED IN ACCORDANCE WITH THE DESIGN SPECIFICATIONS AND THE ACI STANDARDS, WITH OVERLAPS OF 40 BAR DIAMETERS.
9. DOWEL BARS SHALL BE SMOOTH, LEVEL, AND PERPENDICULAR TO THE JOINT; ADEQUATELY SUPPORTED TO RETAIN PROPER ALIGNMENT; AND SHALL HAVE ONE END PROTECTED AGAINST BONDING TO THE CONCRETE IN ACCORDANCE WITH STANDARD CONSTRUCTIONS SPECIFICATIONS (SEE SECTION 5.1 PART 2 ITEM 6).
10. REBAR CHAIRS SHALL BE PLACED ON 4' MAXIMUM SPACING, EACH WAY.
11. REINFORCING STEEL COVER SHALL BE MINIMUM 2 IN. FORMED AND 3 IN. AGAINST EARTH IF UNFORMED FROM OUTSIDE LAYER OF STEEL TO FACE OF CONCRETE. THE MAXIMUM LATERAL COVER IS 3 INCHES.

CONCRETE

12. PLACEMENT OF CONCRETE NEEDS TO COMPLY WITH THE SPECIFICATIONS AND ACI STANDARDS, INCLUDING HOT AND COLD WEATHER PLACEMENT. SEE STANDARD SPECIFICATION SECTION 5.1 PART 3 ITEM E FOR MORE INFORMATION.
13. NO WATER SHALL BE ADDED AFTER INSPECTION AND TESTING.
14. CONCRETE SHALL BE VIBRATED WHERE POSSIBLE.
15. UNLESS OTHERWISE SPECIFIED, CONCRETE SHALL BE PLACED AT 4 IN. SLUMP, ± 1 INCH.

DIMENSIONAL TOLERANCES

16. LEVEL AND HORIZONTAL ALIGNMENT TOLERANCES FOR CURBS, GUTTERS, PAVEMENTS, SIDEWALKS, AND RAMPS, IN ALL DIRECTIONS, SHALL BE SUCH THAT THE GAP BELOW AN UNLEVELED 10' STRAIGHTEDGE RESTING ON THE HIGH SPOTS SHALL NOT EXCEED 1/8 INCH.
17. DIMENSIONAL TOLERANCES FOR OTHER CONCRETE PLACEMENTS SHALL COMPLY WITH ACI 117.

CONSTRUCTION AND CRACK CONTROL AND EXPANSION JOINTS

18. UNLESS OTHERWISE SPECIFIED CONSTRUCTION (FULL DEPTH) JOINTS SHALL BE PLACED AT MAXIMUM OF 50' AND CRACK CONTROL JOINTS (DUMMY JOINTS) AT A MAXIMUM OF 10'.
19. CRACK CONTROL JOINTS MAY BE TOOLED OR SAWED A MINIMUM OF 1/2 THE THICKNESS OF THE CONCRETE ON CURB AND GUTTER AND 1/2 INCH ON SIDEWALKS.
20. CONSTRUCTION JOINTS ARE FULL DEPTH JOINTS AND MAY BE CONSTRUCTED WITH DOWEL BARS, AS INDICATED IN THE DESIGN AND DETAILS.
21. EXPANSION BARS ARE FULL DEPTH JOINTS THAT MAY BE CONSTRUCTED WITH SMOOTH BARS AS INDICATED IN THE DESIGN AND DETAILS. EXPANSION MATERIAL MAY BE ½ IN. THICK REDWOOD OR ANY MATERIAL COMPLYING WITH ASTM D 1751. ALL MATERIALS MUST BE PLACED IN ACCORDANCE WITH THE MANUFACTURERS' RECOMMENDATIONS.

WACO

ENGINEERING DIVISION

REVISIONS

NO.	COMMENTS	BY	DATE
1	MODIFY NOTE 15	MZ	10/24/2022
##	DESCRIPTION	FL	MM/DD/YYYY

DATE 12/22/2021

G-7

CP&Y, INC.
TEXAS REGISTERED ENGINEERING FIRM
TBPE F-1741

STATE OF TEXAS
DAVID L. MAREK
#83327
REGISTERED
PROFESSIONAL ENGINEER
4-14-2023

NO.	REVISION	BY	DATE

VERIFY SCALE 0 1"
BAR LENGTH EQUALS ONE INCH ON ORIGINAL DRAWING. VERIFY LENGTH ON THIS SHEET AND ADJUST SCALE ACCORDINGLY

CITY OF WACO
SOUTH 11TH STREET IMPROVEMENTS

CITY OF WACO
GENERAL DETAILS

DESIGN: DLM
DRAWN: CDG
REVIEW: DLM
CP&Y: CWAC2200923
CLIENT:

SHEET
C801

PRINTED BY: emcdougald DATE: 4/12/2023
FILE PATH: G:\Projects\CWAC2200923-11th and Mary\08_Plans_Drawings\20_Sheets\2200923-C80-DETAILS.dwg, C801
G:\Projects\CWAC2200923-11th and Mary\08_Plans_Drawings\20_Sheets\2200923-C80-DETAILS.dwg, C801, 4/12/2023 1:11:54 PM, 1:1

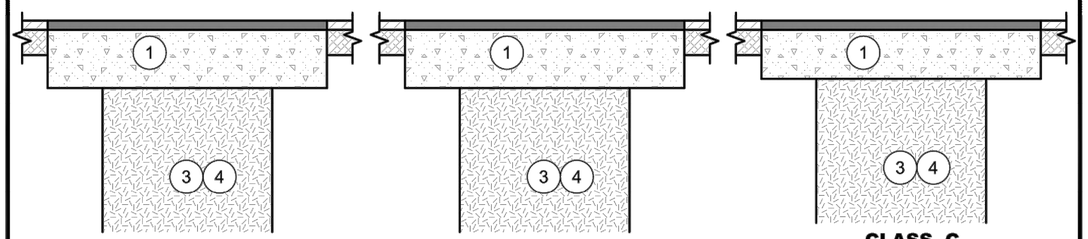

CLASS A
H.M.A.C.
INDUSTRIAL COLLECTOR &
ARTERIAL STREETS

CLASS B
H.M.A.C.
RESIDENTIAL COLLECTOR &
COMMERCIAL COLLECTOR STREETS

CLASS C
H.M.A.C.
LOCAL STREETS

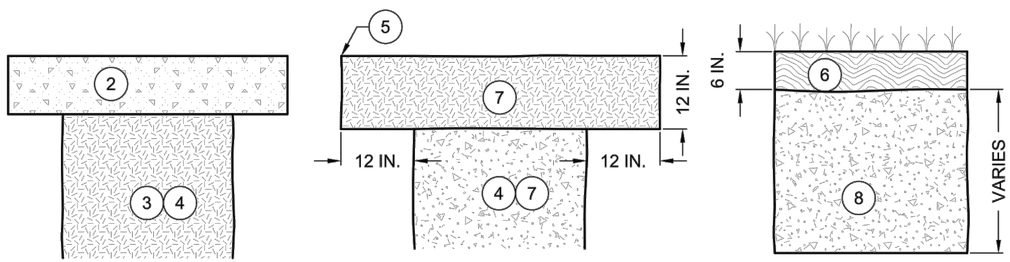

CLASS D
CONCRETE

CLASS E
FOR EXISTING NON-BONDED
AGGREGATE SURFACES ONLY

CLASS F
SEED OR SOD

PAVEMENT / SURFACE REPLACEMENT DETAILS

1. SEE ST-30 AND APPLICABLE ST-33 AND/OR ST-34 FOR SAW CUT AND PAVEMENT REPLACEMENT DETAILS.
2. SEE ST-37 AND APPLICABLE ST-35 AND/OR ST-36 FOR SAW CUT AND PAVEMENT REPLACEMENT DETAILS.
3. TYPE "A" MATERIAL PER STANDARD SPECIFICATIONS FOR CONSTRUCTION, SECTION 4.2 EXCAVATION AND BACKFILL, PART 2: PRODUCT, A. MATERIALS, 3. TRENCH BACKFILL, A. TYPE "A." MATERIAL MECHANICALLY COMPACTED TO 95% OF THE MAXIMUM DRY DENSITY (TEX-113-E) OR CONTROLLED LOW STRENGTH MATERIAL.
4. USE CONTROLLED LOW STRENGTH MATERIAL TO BACKFILL ALL TRENCHES 18 IN. OR NARROWER, IN THE RIGHT-OF-WAY AND PUBLIC EASEMENTS.
5. EDGE TO BE STRAIGHT, SQUARE AND PARALLEL TO SIDES OF TRENCH.
6. 6 IN. MIN. TOPSOIL AND SEED OR SOD - SUBSIDIARY.
7. TXDOT ITEM 247 FLEXIBLE BASE TYPE A GRADE 1-2 MINIMUM PLASTICITY INDEX 5.
8. SEE G-10 FOR BACKFILL MATERIAL REQUIREMENTS AND FOR INSTALLATION.

WACO

ENGINEERING DIVISION

REVISIONS

NO.	COMMENTS	BY	DATE
1	ADD NOTES	MZ	09/12/2022
##	DESCRIPTION	FL	MO/DY/YEAR

DATE
12/22/2021

G-9

CP&Y, INC.
TEXAS REGISTERED ENGINEERING FIRM
TBPE F-1741

STATE OF TEXAS
DAVID L. MAREK
#83327
REGISTERED
PROFESSIONAL ENGINEER
4-14-2023

NO.	REVISION	BY	DATE

VERIFY SCALE 0 1"
BAR LENGTH EQUALS ONE INCH ON ORIGINAL DRAWING. VERIFY LENGTH ON THIS SHEET AND ADJUST SCALE ACCORDINGLY.

CITY OF WACO
SOUTH 11TH STREET IMPROVEMENTS

CITY OF WACO
GENERAL DETAILS

DESIGN: DLM
DRAWN: CDG
REVIEW: DLM
CP&Y: CWAC2200923
CLIENT:

SHEET
C802

STREET - GENERAL NOTES

GENERAL

1. ALL CONCRETE, REINFORCEMENT, AND PLACEMENT MUST COMPLY WITH SECTION 5.1 OF THE CITY OF WACO STANDARD SPECIFICATIONS FOR CONSTRUCTION.
2. PLEASE REFER TO CITY OF WACO MANUAL OF STANDARD DETAILS, GENERAL DETAILS, GENERAL CONCRETE AND REINFORCEMENT NOTES.

STREETS

3. SAW JOINTS AS SOON AS IT IS POSSIBLE TO DO SO WITHOUT DAMAGING THE PAVEMENT AND LESS THAN 24 HOURS AFTER CONCRETE PLACEMENT. THE EXACT TIME IS SUBJECT TO APPROVAL BY THE CITY ENGINEER.

CURB AND GUTTER

4. NOTES UNDER THIS HEADING SHALL APPLY TO ALL THE TYPES OF CURBS AND GUTTERS.
5. CURB AND GUTTER FORMS SHALL BE "TAPPED" TO MINIMIZE VOIDS. WITHIN 24 HOURS OF REMOVAL OF THE FORMS, ANY VOIDS SHALL BE PATCHED WITH PORTLAND CEMENT MORTAR.
6. 2 INCH MINIMUM CLEAR DISTANCE SHALL BE USED FOR ALL REBAR.
7. EXPANSION JOINTS, PER STANDARD DETAILS, SHALL BE CONSTRUCTED AT EACH SIDE OF STRUCTURES, AT EACH SIDE OF DRIVEWAYS, CURB RETURNS, AND AT LOCATIONS NECESSARY TO LIMIT SPACING TO 50 FT. EXPANSION JOINTS SHALL BE CONSTRUCTED TO MATCH EXISTING EXPANSION JOINTS IN PAVEMENT OR CURB AND GUTTER ADJACENT TO JOINTED CONCRETE PAVEMENT
8. AT ALL EXPANSION JOINTS FOR CURBS AND GUTTERS, THE FOLLOWING SHALL APPLY:
   - 8.1. JOINTS SHALL BE 1/2 IN. WIDE
   - 8.2. MATERIALS USED SHALL BE IN ACCORDANCE WITH CITY STANDARD SPECIFICATIONS FOR EXPANSION JOINTS
   - 8.3. USE TWO 24 IN. LONG 3/4 IN. DIAMETER SMOOTH BARS FOR DOWELS
   - 8.4. USE 3/4 IN. P.V.C PIPE SLEEVE WITH CAPPED END PLACED LEVEL AND PERPENDICULAR TO THE FACE
9. CONTRACTION JOINTS SHALL BE PLACED ON 10' SPACING. JOINTS SHALL BE CUT OR TOOLED AT LEAST 2 INCHES THROUGH THE FACE, TOP, AND GUTTER.
10. CURB AND GUTTER SHALL CURE A MINIMUM OF 7 DAYS PRIOR TO INSTALLATION OF STREET BASE COURSE. IF CYLINDER BREAK SHOW A COMPRESSIVE STRENGTH OF 3000 PSI, THE CITY ENGINEER MAY APPROVE INSTALLATION OF BASE COURSE PRIOR TO 7 DAYS.
11. CURB AND GUTTER SHALL BE PLACED USING A MULE AND GOOSENECK OR APPROVED EQUIVALENT MEANS TO PRODUCE A UNIFORM PRODUCT WITH THE PRIOR APPROVAL OF THE CITY ENGINEER.
12. 1/2 IN. EXPANSION JOINTS ARE REQUIRED WHERE BACK OF CURBS OR CURB CUTS ARE ADJACENT TO CONCRETE FLATWORK (I.E. SIDEWALKS OR RIPRAP).
13. ALL EXISTING CURBS AND GUTTERS SHALL BE REMOVED BY FULL DEPTH SAWCUT PERPENDICULAR AND PARRELLEL TO THE STREET.
14. IF PORTLAND CEMENT MORTAR TOPPING IS USED, IT SHALL BE 1/2 INCH THICK.
15. THE LIP OF GUTTER SHALL BE THE SAME ELEVATION AS TOP OF SURFACE COURSE.

METAL BEAM GUARD FENCE

16. METAL BEAM GUARD FENCE SHALL BE INSTALLED IN ACCORDANCE WITH THE LATEST TEXAS DEPARTMENT OF TRANSPORTATION ROADWAY STANDARDS AND STANDARD SPECIFICATIONS.

WACO

ENGINEERING DIVISION

REVISIONS			
NO.	COMMENTS	BY	DATE
##	DESCRIPTION	FL	MM/DD/YYYY

DATE 11/29/2021

ST-1

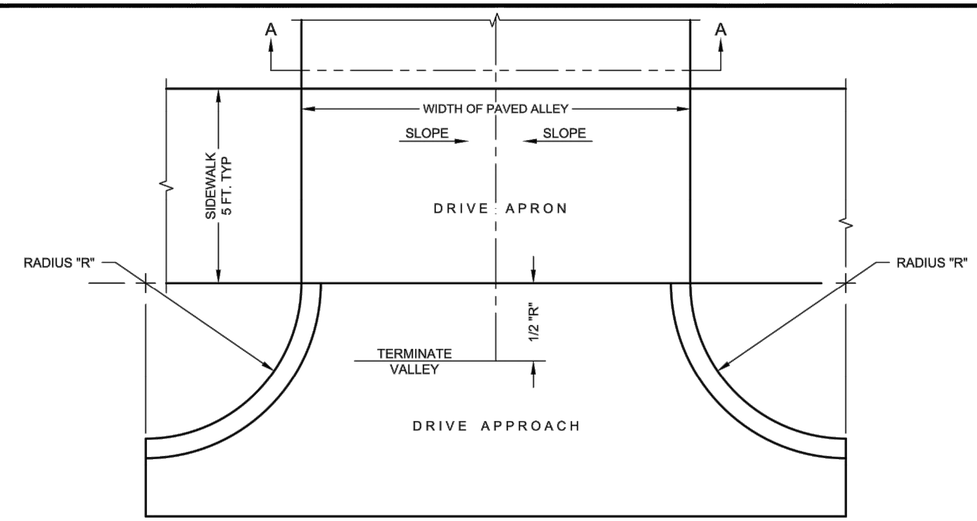

PLAN VIEW

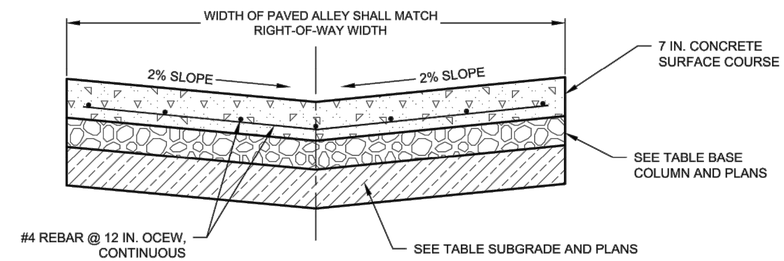

SECTION VIEW

NOTES:

1. ALLEYS IN RESIDENTIAL BLOCKS SHALL HAVE A MINIMUM RIGHT-OF-WAY WIDTH OF 20 FEET.
2. ALLEYS IN COMMERCIAL AREAS SHALL HAVE A MINIMUM RIGHT-OF-WAY WIDTH OF 30 FEET.
3. ALLEY INVERT SHALL BE CARRIED THROUGH DRIVEWAY APRON. TRANSITION SHALL TERMINATE PER DETAIL ABOVE.
4. SEE DRIVE APPROACH DETAILS FOR ADDITIONAL REQUIREMENTS.

	RIGID PAVEMENT SECTION (P.C. CONCRETE)		
P.I. OF SUBGRADE	P.C. CONCRETE	BASE	SUBGRADE
P.I. ≤ 20	7 IN.	4 IN. CTB[1,2]	COMPACTED[3]
20< P.I. < 40	7 IN.	-	6 IN. LSS
P.I. ≥ 40	7 IN.	-	8 IN. LSS

1. SUBSTITUTE: 4 IN. RECYCLED CRUSHED (TxDOT STANDARD SPECIFICATIONS FOR CONSTRUCTION ITEM 247 FLEXIBLE BASE TYPE D GRADE 1-2 WITH MINIMUM P.I. OF FOUR).
2. BOND BREAKER CONSISTING OF 10 MIL POLYETHYLENE BETWEEN CTB AND P.C. CONCRETE PAVEMENT.
3. COMPACTED TO 95% DENSITY OF MAXIMUM DENSITY PER TEST PROCEDURE TEX-114-E.

STANDARD ALLEY DETAILS

(NO SCALE)

DISCLAIMER: THE USE OF THIS STANDARD IS GOVERNED BY THE "TEXAS ENGINEERING PRACTICE ACT". NO WARRANTY OF ANY KIND IS MADE BY THE CITY OF WACO FOR ANY PURPOSE WHATSOEVER. THE CITY OF WACO ASSUMES NO RESPONSIBILITY FOR THE CONVERSION OF THIS STANDARD TO OTHER FORMATS OR FOR INCORRECT RESULTS OR DAMAGES RESULTING FROM ITS USE.

WACO

ENGINEERING DIVISION

REVISIONS			
NO.	COMMENTS	BY	DATE
##	DESCRIPTION	FL	MM/DD/YYYY

DATE 02/15/2022

ST-4

CP&Y, INC.
TEXAS REGISTERED ENGINEERING FIRM
TBPE F-1741

STATE OF TEXAS
DAVID L. MAREK
#83327
REGISTERED
PROFESSIONAL ENGINEER
4-14-2023

NO.	REVISION	BY	DATE

VERIFY SCALE 0 1"
BAR LENGTH EQUALS ONE INCH ON ORIGINAL DRAWING. VERIFY LENGTH ON THIS SHEET AND ADJUST SCALE ACCORDINGLY

CITY OF WACO
SOUTH 11TH STREET IMPROVEMENTS

CITY OF WACO
STREET DETAILS

DESIGN: DLM
DRAWN: CDG
REVIEW: DLM
CP&Y: CWAC2200923
CLIENT:

SHEET
C803

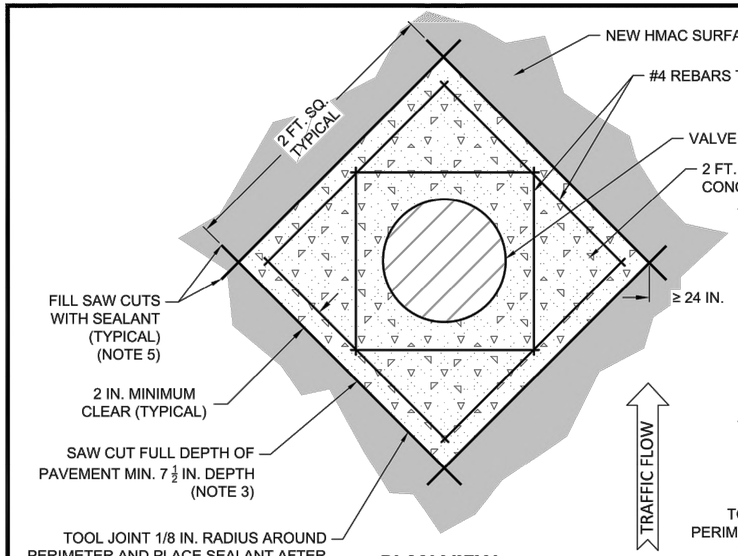

PLAN VIEW

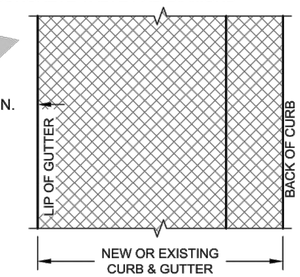

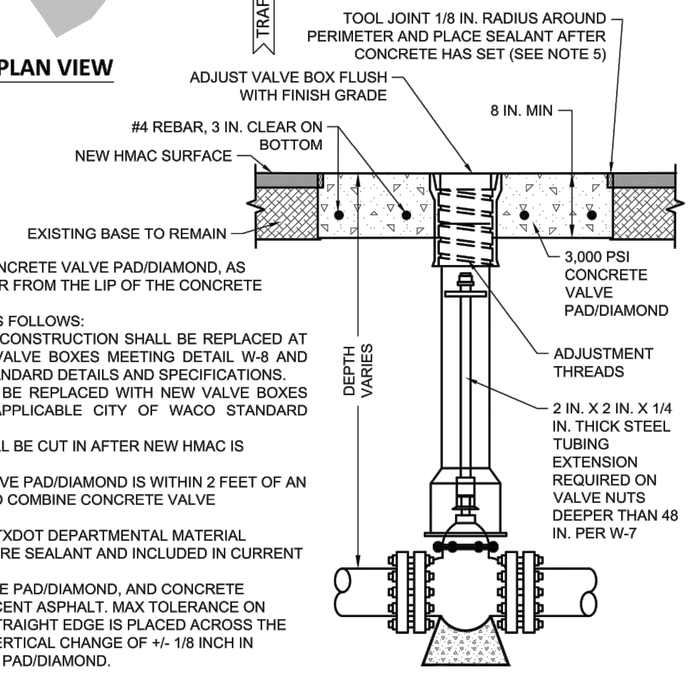

ELEVATION

NOTES:

1. THIS DETAIL SHALL BE USED WHEN THE CONCRETE VALVE PAD/DIAMOND, AS DETAILED ABOVE, IS 24 INCHES OR GREATER FROM THE LIP OF THE CONCRETE GUTTER.
2. RE-USE EXISTING VALVE BOXES, EXCEPT AS FOLLOWS:
   A. EXISTING VALVE BOXES DAMAGED BY CONSTRUCTION SHALL BE REPLACED AT THE CONTRACTOR'S EXPENSE WITH VALVE BOXES MEETING DETAIL W-8 AND OTHER APPLICABLE CITY OF WACO STANDARD DETAILS AND SPECIFICATIONS.
   B. ANY OLD-STYLE VALVE BOXES SHALL BE REPLACED WITH NEW VALVE BOXES MEETING DETAIL W-8 AND OTHER APPLICABLE CITY OF WACO STANDARD DETAILS AND SPECIFICATIONS.
3. NEW CONCRETE VALVE PAD/DIAMOND SHALL BE CUT IN AFTER NEW HMAC IS PLACED.
4. IF POINT ON PERIMETER OF CONCRETE VALVE PAD/DIAMOND IS WITHIN 2 FEET OF AN ADJACENT CONCRETE VALVE PAD/DIAMOND COMBINE CONCRETE VALVE PADS/CONCRETE DIAMONDS.
5. SEALANT SHALL BE IN ACCORDANCE WITH TXDOT DEPARTMENTAL MATERIAL SPECIFICATION DMS-6340 VEHICLE LOOP WIRE SEALANT AND INCLUDED IN CURRENT TXDOT MATERIAL PRODUCER LIST.
6. VALVE LID SHALL BE FLUSH WITH CONCRETE PAD/DIAMOND, AND CONCRETE PAD/DIAMOND SHALL BE FLUSH WITH ADJACENT ASPHALT. MAX TOLERANCE ON BOTH IS +/-1/8 INCH IN ADDITION, WHEN A STRAIGHT EDGE IS PLACED ACROSS THE FINISHED DIAMOND, THERE SHALL BE NO VERTICAL CHANGE OF +/- 1/8 INCH IN ASPHALT WITHIN 1 FT OF ALL SIDES OF THE PAD/DIAMOND.

VALVE BOX HEIGHT ADJUSTMENT A

(FOR ASPHALT STREET REHABILITATION PROJECTS ONLY)

(NO SCALE)

WACO ENGINEERING DIVISION

REVISIONS

NO.	COMMENTS	BY	DATE
##	DESCRIPTION	FL	MM/DD/YYYY

DATE 11/29/2021

ST-13

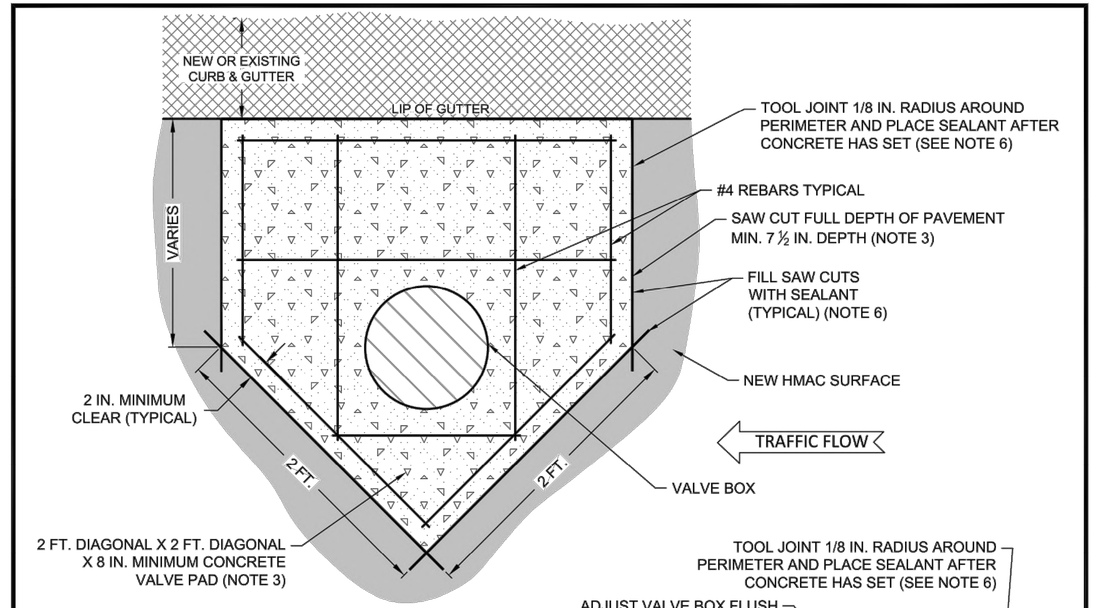

PLAN VIEW

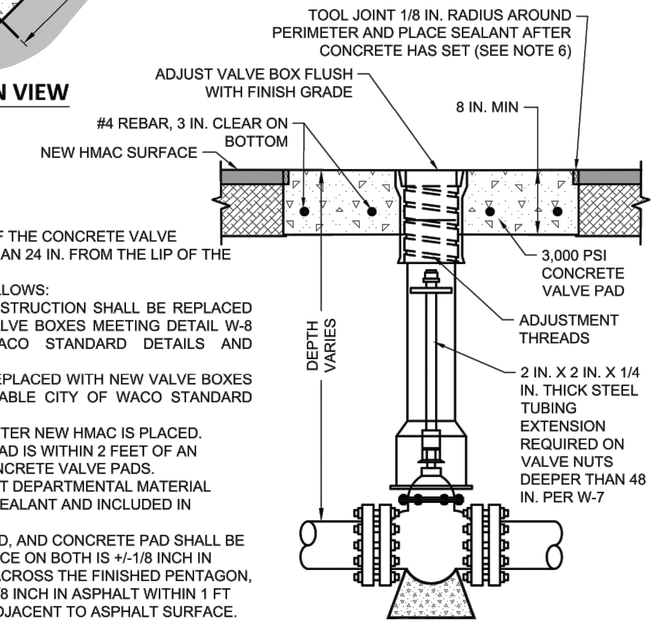

ELEVATION

NOTES:

1. THIS DETAIL SHALL BE USED WHEN ANY PART OF THE CONCRETE VALVE PAD/DIAMOND AS DETAILED ON ST-13 IS LESS THAN 24 IN. FROM THE LIP OF THE CONCRETE GUTTER.
2. RE-USE EXISTING VALVE BOXES, EXCEPT AS FOLLOWS:
   A. EXISTING VALVE BOXES DAMAGED BY CONSTRUCTION SHALL BE REPLACED AT THE CONTRACTOR'S EXPENSE WITH VALVE BOXES MEETING DETAIL W-8 AND OTHER APPLICABLE CITY OF WACO STANDARD DETAILS AND SPECIFICATIONS.
   B. ANY OLD-STYLE VALVE BOXES SHALL BE REPLACED WITH NEW VALVE BOXES MEETING DETAIL W-8 AND OTHER APPLICABLE CITY OF WACO STANDARD DETAILS AND SPECIFICATIONS.
4. NEW CONCRETE VALVE PAD SHALL BE CUT IN AFTER NEW HMAC IS PLACED.
5. IF POINT ON PERIMETER OF CONCRETE VALVE PAD IS WITHIN 2 FEET OF AN ADJACENT CONCRETE VALVE PAD COMBINE CONCRETE VALVE PADS.
6. SEALANT SHALL BE IN ACCORDANCE WITH TXDOT DEPARTMENTAL MATERIAL SPECIFICATION DMS-6340 VEHICLE LOOP WIRE SEALANT AND INCLUDED IN CURRENT TXDOT MATERIAL PRODUCER LIST.
7. VALVE LID SHALL BE FLUSH WITH CONCRETE PAD, AND CONCRETE PAD SHALL BE FLUSH WITH ADJACENT ASPHALT. MAX TOLERANCE ON BOTH IS +/-1/8 INCH IN ADDITION, WHEN A STRAIGHT EDGE IS PLACED ACROSS THE FINISHED PENTAGON, THERE SHALL BE NO VERTICAL CHANGE OF +/- 1/8 INCH IN ASPHALT WITHIN 1 FT OF THE 4 SIDES OF THE PENTAGON THAT ARE ADJACENT TO ASPHALT SURFACE.

VALVE BOX HEIGHT ADJUSTMENT DETAIL B

(FOR ASPHALT STREET REHABILITATION PROJECTS ONLY)

(NO SCALE)

WACO ENGINEERING DIVISION

REVISIONS

NO.	COMMENTS	BY	DATE
##	DESCRIPTION	FL	MM/DD/YYYY

DATE 11/29/2021

ST-14

CP&Y, INC.
TEXAS REGISTERED ENGINEERING FIRM
TBPE F-1741

STATE OF TEXAS
DAVID L. MAREK
#83327
REGISTERED PROFESSIONAL ENGINEER
4-14-2023

NO.	REVISION	BY	DATE

VERIFY SCALE 0 1"
BAR LENGTH EQUALS ONE INCH ON ORIGINAL DRAWING. VERIFY LENGTH ON THIS SHEET AND ADJUST SCALE ACCORDINGLY

CITY OF WACO
SOUTH 11TH STREET IMPROVEMENTS

CITY OF WACO
STREET DETAILS

DESIGN: DLM
DRAWN: CDG
REVIEW: DLM
CP&Y: CWAC2200923
CLIENT:

SHEET
C804

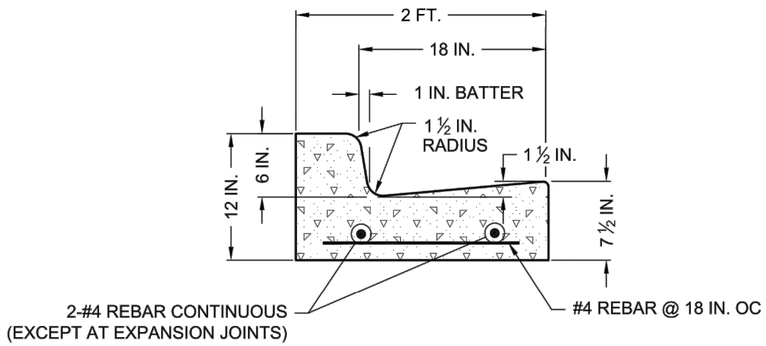

DIRECT FLOW

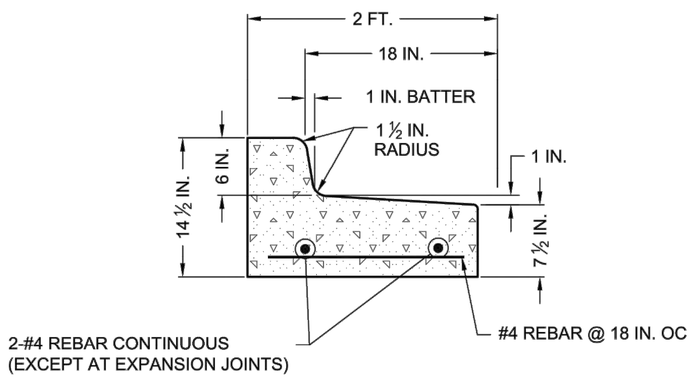

INDIRECT FLOW

STANDARD CURB AND GUTTER DETAILS

(NO SCALE)

DISCLAIMER: THE USE OF THIS STANDARD IS GOVERNED BY THE "TEXAS ENGINEERING PRACTICE ACT". NO WARRANTY OF ANY KIND IS MADE BY THE CITY OF WACO FOR ANY PURPOSE WHATSOEVER. THE CITY OF WACO ASSUMES NO RESPONSIBILITY FOR THE CONVERSION OF THIS STANDARD TO OTHER FORMATS OR FOR INCORRECT RESULTS OR DAMAGES RESULTING FROM ITS USE.

WACO

ENGINEERING DIVISION

REVISIONS			
NO.	COMMENTS	BY	DATE
##	DESCRIPTION	FL	MM/DD/YYYY

DATE 11/29/2021

ST-15

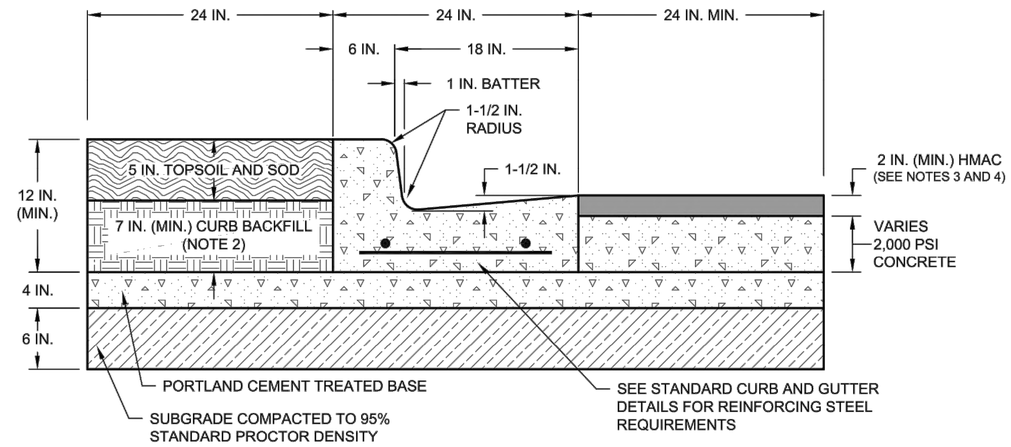

DIRECT FLOW

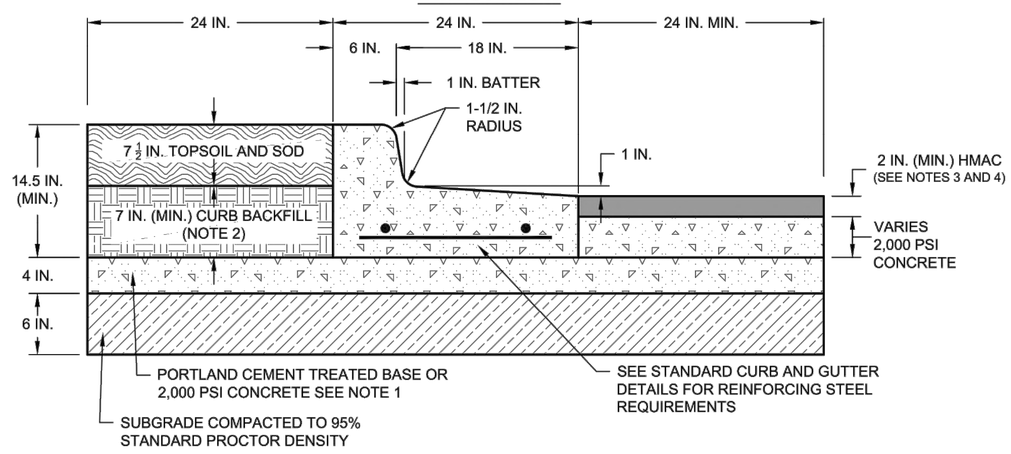

INDIRECT FLOW

NOTES:

1. CURB AND GUTTER SHALL BE PLACED SEPARATELY AFTER BASE OR 2,000 PSI CONCRETE HAS CURED.
2. TYPE "A" MATERIAL PER STANDARD SPECIFICATIONS FOR CONSTRUCTION SECTION 4.2 EXCAVATION AND BACKFILL PART 2: PRODUCT A. MATERIALS 3. TRENCH BACKFILL A. TYPE "A" MATERIAL MECHANICALLY COMPACTED TO 95% OF THE MAXIMUM DRY DENSITY (TEX-113-E).
3. HMAC SHALL BE TYPE D FOR STREET CLASSIFICATION LOCAL AND RESIDENTIAL COLLECTOR.
4. HMAC SHALL BE TYPE C OR TYPE D FOR STREET CLASSIFICATION OF COMMERCIAL COLLECTOR AND INDUSTRIAL COLLECTOR. FOR INDUSTRIAL COLLECTOR DEPTH OF HMAC SHALL BE 3 INCHES.

STANDARD CURB & GUTTER REPLACEMENT DETAILS

(USE FOR EXISTING STREETS ONLY)

(NO SCALE)

DISCLAIMER: THE USE OF THIS STANDARD IS GOVERNED BY THE "TEXAS ENGINEERING PRACTICE ACT". NO WARRANTY OF ANY KIND IS MADE BY THE CITY OF WACO FOR ANY PURPOSE WHATSOEVER. THE CITY OF WACO ASSUMES NO RESPONSIBILITY FOR THE CONVERSION OF THIS STANDARD TO OTHER FORMATS OR FOR INCORRECT RESULTS OR DAMAGES RESULTING FROM ITS USE.

WACO

ENGINEERING DIVISION

REVISIONS			
NO.	COMMENTS	BY	DATE
##	DESCRIPTION	FL	MM/DD/YYYY

DATE 11/29/2021

ST-20

CP&Y, INC.
TEXAS REGISTERED ENGINEERING FIRM TBPE F-1741

STATE OF TEXAS
DAVID L. MAREK #83327
REGISTERED PROFESSIONAL ENGINEER
4-14-2023

NO.	REVISION	BY	DATE

VERIFY SCALE 0 1"
BAR LENGTH EQUALS ONE INCH ON ORIGINAL DRAWING. VERIFY LENGTH ON THIS SHEET AND ADJUST SCALE ACCORDINGLY

CITY OF WACO
SOUTH 11TH STREET IMPROVEMENTS

CITY OF WACO
STREET DETAILS

DESIGN: DLM
DRAWN: CDG
REVIEW: DLM
CP&Y: CWAC2200923
CLIENT:

SHEET
C805

PRINTED BY: emcdougald DATE: 4/12/2023
FILE PATH: G:\Projects\CWAC2200923-11th and Mary\08_Plans_Drawings\20_Sheets\2200923-C80-DETAILS.dwg, C805

G:\Projects\CWAC2200923-11th and Mary\08_Plans_Drawings\20_Sheets\2200923-C80-DETAILS.dwg, C805, 4/12/2023 11:12:02 PM, 1:1

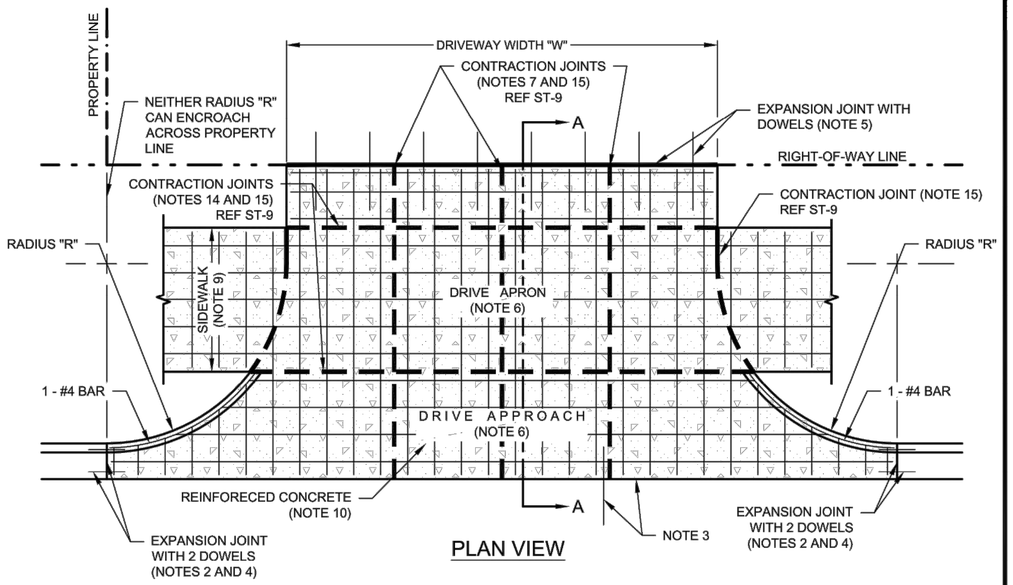

PLAN VIEW

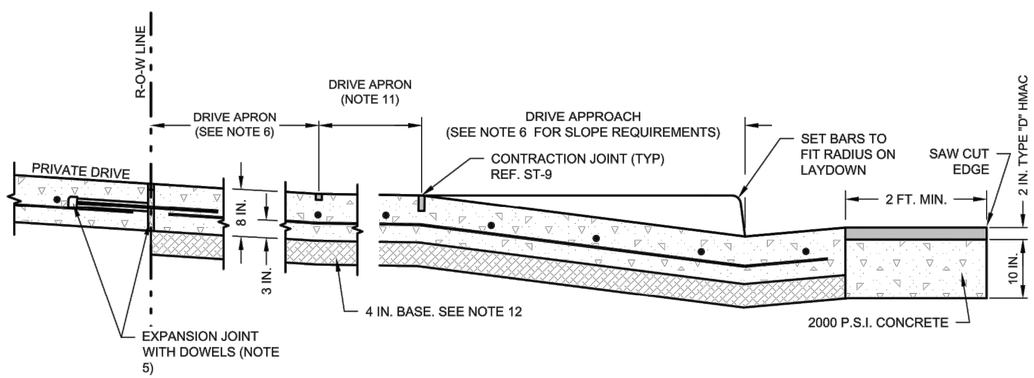

SECTION A - NEW APPROACH ON EXISTING ASPHALT STREET

(NO SCALE)

STANDARD COMMERCIAL DRIVE APPROACH

(NO SCALE)

SEE ST-24B FOR ADDITIONAL DETAILS

WACO

ENGINEERING DIVISION

REVISIONS

NO.	COMMENTS	BY	DATE
2	ADD NOTES	MZ	09/12/2022
1	ADD NOTE	MZ	01/31/2022
##	DESCRIPTION	FL	MM/DD/YYYY

DATE 01/31/2022

ST-24A

COMMERCIAL DRIVE APPROACH GENERAL NOTES

NOTES:

1. COMMERCIAL TYPE DRIVE APPROACHES AND TURN-OUTS (I.E. FOR BUSINESS PROPERTY) REQUIRE CITY TRAFFIC APPROVAL.
2. WHEN CONSTRUCTING DRIVE AT EXISTING CURB, CURB MUST BE SAWED. IF THE RADIUS RETURN IS WITHIN 3 FT. OF AN EXISTING JOINT, THE EXISTING CURB AND GUTTER SHALL BE REMOVED AND REPLACED TO THE NEXT EXISTING JOINT.
3. ON CONCRETE STREETS: EXPANSION JOINT WITH DOWELS 3/4 IN. Ø X 24 IN. LONG SMOOTH DOWEL BARS WITH 3/4 IN. Ø PVC PIPE SLEEVE WITH CAPPED END. (REF ST-9)
4. EXPANSION JOINT: 2 EACH 3/4 IN. Ø X 24 IN. LONG SMOOTH DOWEL BARS WITH 3/4 IN. Ø PVC PIPE SLEEVE WITH CAPPED END. WHEN ADDING TO EXISTING DRIVE APPROACH, JOINT MUST BE SAW-CUT. REF. ST-9 FOR ADDITIONAL REQUIREMENTS.
5. EXPANSION JOINT WITH 3/4 IN. Ø X 24 IN. LONG SMOOTH DOWEL BARS WITH 3/4 IN. Ø PVC PIPE SLEEVE WITH CAPPED END AT 36 IN. OC. (REF ST-9)
6. THE DRIVEWAY SLOPE IN THE FIRST 10 FEET FROM THE GUTTER LINE SHALL BE A MAXIMUM OF 5%. THE SLOPE MAY RISE AN ADDITIONAL 5% OR FALL A MAXIMUM OF 6% IN THE SECOND 10 FEET. THROUGH DRIVE APRON AT EXISTING OR FUTURE SIDEWALKS, MAX SLOPE SHALL BE 1.5%
7. A LONGITUDINAL CONTRACTION JOINT SHALL BE PLACED AT CENTERLINE OF ALL DRIVEWAYS AND ADDITIONAL LONGITUDINAL CONTRACTION JOINTS SHALL BE PLACED, EXCEPT FOR ALLEY OF 20 FT. OR NARROWER, SPACED EQUALLY AT 10 FT. MAXIMUM SPACING.
8. SEE ST-4 STANDARD ALLEY SECTION FOR ADDITIONAL INFORMATION WHEN CONNECTING TO A COMMERCIAL ALLEY.
9. SIDEWALK: SEE CODE OF ORDINANCES FOR REQUIREMENTS OF SIDEWALK.
   LOCATIONS WITHIN THE CODE OF ORDINANCES OF MINIMUM REQUIRED WIDTHS OF SIDEWALK AND RELATED BUFFER PRESENTLY INCLUDE THE FOLLOWING
   - SEC. 22-37. - CHANGING OF GRADE OF STREETS, ETC.
   - SEC. 22-63. - SAME-LOCATION AND WIDTH OF SIDEWALKS.
   - SEC. 28-880.11. - PUBLIC SPACES.
   - SEC. 28-839. - SIDEWALKS.
   - SUBDIVISION ORDINANCE SEC. 5.2. - PERMANENT IMPROVEMENTS.5.207. SIDEWALKS
10. MINIMUM 8 IN REINFORCED CONCRETE WITH #4 BARS AT 18 IN. OCEW (CONCRETE CHAIRS REQUIRED). CONTINUOUS THROUGH DRIVE APPROACH, DRIVE APRON, AND SIDEWALK.
11. DRIVE APRON AT EXISTING AND FUTURE SIDEWALKS. MAX SLOPE OF 1.5% FORMED. ANY SLOPE EXCEEDING 2% SHALL NOT BE ACCEPTED.
12. 4 IN. TYPE "A" MATERIAL PER STANDARD SPECIFICATIONS FOR CONSTRUCTION SECTION 4.2 EXCAVATION AND BACKFILL PART 2: PRODUCT A. MATERIALS 3. TRENCH BACKFILL A. TYPE "A" OR 4 IN. RECYCLED CRUSHED CONCRETE (TXDOT STANDARD SPECIFICATIONS FOR CONSTRUCTION ITEM 247 FLEXIBLE BASE TYPE D, GRADE 1-2 EXCLUDING TYPE A MATERIALS, WITH A MINIMUM P.I. OF FOUR) OR 4 IN. PORTLAND CEMENT TREATED BASE (AFTER COMPACTION COVERED BY 10 MIL POLYETHELENE BOND BREAKER) MECHANICALLY COMPACTED TO 95% OF THE MAXIMUM DRY DENSITY.
13. UPON REQUEST, CONTRACTOR SHALL SHOW INSPECTOR SIDEWALK COMPLIANCE.
14. IF DISTANCE BETWEEN INITIALLY REQUIRED TRANSVERSE JOINTS EXCEEDS 10 FT. THEN ADDITIONAL CONTRACTION JOINT(S) SHALL BE PLACED TO ENSURE DISTANCE BETWEEN TRANSVERSE JOINTS DOES NOT EXCEED 10 FEET. THESE ADDITIONALLY REQUIRED CONTRACTION JOINTS SHALL BE PLACED TO PROVIDE EQUAL SPACING BETWEEN TRANSVERSE JOINTS TO THE EXTENT PRACTICAL.
15. CONTRACTION JOINT MAY BE TOOLED. SEE ST-9 FOR DETAILS.

COMMERCIAL DRIVEWAY STANDARDS		
DRIVEWAY TYPE	"W" DRIVEWAY WIDTH	"R" BACK OF CURB RADIUS
ARTERIAL	30 FT MIN ~ 42 FT MAX	10 FT MIN
COLLECTOR/LOCAL/CBD	24 FT MIN ~ 42 FT MAX	10 FT MIN
ALLEY (NOTE 8)	MATCH ALLEY R.O.W.	10 FT MIN ~ 25 FT MAX
INDUSTRIAL DRIVEWAY AND INTERNAL CIRCULATION STANDARDS		
DRIVEWAY TYPE	"W" DRIVEWAY WIDTH	"R" BACK OF CURB RADIUS
ARTERIAL	30 FT MIN ~ 50 FT MAX	15 FT MIN ~ 25 FT MAX
COLLECTOR/LOCAL/CBD	30 FT MIN ~ 50 FT MAX	10 FT MIN ~ 25 FT MAX
ALLEY (NOTE 8)	MATCH ALLEY R.O.W.	10 FT MIN ~ 25 FT MAX
SEE CITY OF WACO DEVELOPMENT GUIDE FOR MORE DETAILS		

SEE ST-24A FOR ADDITIONAL DETAILS

WACO

ENGINEERING DIVISION

REVISIONS

NO.	COMMENTS	BY	DATE
6	REVISE NOTE 12	MZ	01/27/2023
5	REVISE NOTE 12	MZ	01/05/2023
4	REVISE INDUSTRIAL COLLECTOR "R"	MZ	10/24/2022
3	ADD NOTES	MZ	09/12/2022
2	ADD NOTES 12 AND 13	MZ	01/31/2022
##	DESCRIPTION	FL	MM/DD/YYYY

DATE 01/31/2022

ST-24B

CP&Y, INC.
TEXAS REGISTERED ENGINEERING FIRM TBPE F-1741

STATE OF TEXAS — DAVID L. MAREK #83327 — REGISTERED PROFESSIONAL ENGINEER — 4-14-2023

NO.	REVISION	BY	DATE

VERIFY SCALE 0 1"
BAR LENGTH EQUALS ONE INCH ON ORIGINAL DRAWING. VERIFY LENGTH ON THIS SHEET AND ADJUST SCALE ACCORDINGLY

CITY OF WACO
SOUTH 11TH STREET IMPROVEMENTS

CITY OF WACO
STREET DETAILS

DESIGN: DLM
DRAWN: CDG
REVIEW: DLM
CP&Y: CWAC2200923
CLIENT:

SHEET C806

PRINTED BY: emcdougald DATE: 4/12/2023
FILE PATH: G:\Projects\CWAC2200923-11th and Mary\08_Plans_Drawings\20_Sheets\2200923-C80-DETAILS.dwg, C806

G:\Projects\CWAC2200923-11th and Mary\08_Plans_Drawings\20_Sheets\2200923-C80-DETAILS.dwg, C806, 4/12/2023 11:20:04 PM, 1:1

SIDEWALK GENERAL NOTES

GENERAL

1. ALL CONCRETE AND REINFORCEMENT MATERIALS AND PLACEMENT MUST COMPLY WITH SECTION 5.1 OF THE CITY OF WACO STANDARD SPECIFICATIONS FOR CONSTRUCTION AND WITH ALL NOTES ON SHEET G-7 OF THE CITY OF WACO MANUAL OF STANDARD DETAILS.
2. PROPOSED SIDEWALKS MUST COMPLY WITH THE CITY OF WACO CODES AND ORDINANCES, CHAPTER 22, ARTICLE III, SIDEWALKS.
3. PEDESTRIAN ROUTES AND ELEMENTS WITHIN THE CITY RIGHT-OF-WAY AND PUBLIC EASEMENTS SHALL COMPLY WITH THE UNITED STATES ACCESS BOARD'S CURRENT PUBLIC RIGHTS-OF-WAY ACCESSIBILITY GUIDELINES (PROWAG).
4. RETAINING WALLS IN THE RIGHT-OF-WAY AND PUBLIC EASEMENT SHALL BE CAST-IN-PLACE CONCRETE.
5. TRUNCATED DOME BRICK PAVERS ARE REQUIRED FOR DETECTABLE WARNING STRIPS. SAKRETE® PAVER SET POLYMERIC SAND™ OR PRE-APPROVED EQUAL SHALL BE USED.
6. SW-5, SW-6, SW-7, SW-8 SHOW SOME TYPICAL RAMPS, ILLUSTRATING REQUIRED SLOPES AND DIMENSIONS AS THEY MIGHT BE APPLIED IN SEVERAL PARTICULAR CIRCUMSTANCES. IF ADEQUATE RIGHT-OF-WAY IS NOT AVAILABLE FOR THESE TYPICAL RAMPS, ALTERNATE DESIGNS MUST BE CREATED TO FIT WITHIN AVAILABLE RIGHT-OF-WAY AND STILL SATISFY THE GENERAL SLOPE AND DIMENSIONAL REQUIREMENTS ILLUSTRATED.

CONFIGURATION

7. SIDEWALKS AND LANDINGS SHALL BE FORMED AT A MAXIMUM CROSS-SLOPE OF 1.5%. FINISHED CROSS-SLOPES EXCEEDING 2% WILL NOT BE ACCEPTED.
8. NEW SIDEWALK SHALL BE CONNECTED TO ALL EXISTING ADJACENT WALKS AND STEPS.
9. LANDINGS SHALL BE 5 FT. X 5 FT. MINIMUM WITH A MAXIMUM 2% SLOPE IN ANY DIRECTION, GRADED FOR POSITIVE DRAINAGE TO STREET.
10. IF AN EXISTING GUTTER AT THE ENTRANCE TO A NEW RAMP OR LANDING HAS A CROSS SLOPE GREATER THAN 2%, THE EXISTING GUTTER MUST BE REMOVED AND REPLACED WITH GUTTER TIED TO THE 2% CROSS SLOPE ON ONE SIDE AND THE EXISTING STREET ON THE OTHER. THE SLOPE OF THE NEW GUTTER TOWARD THE STREET MAY NOT EXCEED 1:12.
11. SLOPE OF RAMPS SHALL NOT EXCEED 1:12 UNLESS OTHERWISE NOTED.
12. MINIMUM RAMP WIDTH IS 5 FEET EXCLUSIVE OF FLARED SIDES.

CONSTRUCTION

13. PLACE CONSTRUCTION JOINTS WITH EXPANSION MATERIAL AT MINIMUM 50 FT. INTERVALS. EXPANSION JOINTS SHALL EXTEND THROUGH ANY ADJACENT RETAINING WALL OR TRANSITION CURB.
14. REBAR CHAIRS SHALL BE PLACED ON 4 FT. MAX SPACING EACH WAY.
15. PLACE TOOLED, CRACK CONTROL JOINTS AT A SPACING EQUAL TO THE WIDTH OF THE WALK.
16. VERTICAL CHANGES IN LEVEL GREATER THAN 1/4 INCH ARE NOT PERMITTED ALONG SIDEWALKS.
17. WHERE SIDEWALK OR CURB RAMP IS ADJACENT TO BACK OF CURB, DRIVEWAY RADIUS, INLET, OR ANY CONCRETE STRUCTURE, INSTALL CONSTRUCTION JOINT. SEE DETAIL SW-3.
18. WHERE SIDEWALK OR CURB RAMP CONTACTS A POLE OR POLE FOUNDATION, PLACE ½ IN.EXPANSION JOINT MATERIAL BETWEEN POLE OR POLE FOUNDATION AND SIDEWALK/RAMP.
19. CURING OF CONCRETE SHALL BE DONE IN ACCORDANCE WITH SECTION 5.1 OF THE CITY OF WACO STANDARD SPECIFICATIONS FOR CONSTRUCTION.
20. POOR WORKMANSHIP OR APPEARANCE SHALL BE GROUNDS FOR REMOVAL OR REJECTION.

LOCATIONS WITHIN THE CODE OF ORDINANCES OF MINIMUM REQUIRED WIDTHS OF SIDEWALK AND RELATED BUFFER PRESENTLY INCLUDE THE FOLLOWING

- SEC. 22-37. - CHANGING OF GRADE OF STREETS, ETC.
- SEC. 22-63. - SAME-LOCATION AND WIDTH OF SIDEWALKS.
- SEC. 28-880.11. - PUBLIC SPACES.
- SEC. 28-839. - SIDEWALKS.
- SUBDIVISION ORDINANCE SEC. 5.2. - PERMANENT IMPROVEMENTS.5.207. SIDEWALKS

WACO

ENGINEERING DIVISION

REVISIONS

NO.	COMMENTS	BY	DATE
2	REVISE NOTE 17	MZ	12/21/2022
1	ADD CODE OF ORDINANCES LOCATIONS	MZ	03/28/2022
##	DESCRIPTION	FL	MM/DD/YYYY

DATE 01/10/2022

SW-1

SIDEWALK DETAILS LEGEND

1. 5 IN. 3000 PSI CONCRETE WITH REBAR CHAIRS AT 48 IN. OCEW MAX. SIDEWALK SHALL BE 8 IN. THICK WHEN ADJACENT TO RETAINING WALLS. UNLESS OTHERWISE NOTED, SIDEWALK REINFORCEMENT SHALL BE #4 BARS @ 18 IN. OCEW.
2. 4 INCH BASE. TYPE "A" MATERIAL PER STANDARD SPECIFICATIONS FOR CONSTRUCTION SECTION 4.2 EXCAVATION AND BACKFILL PART 2: PRODUCT A. MATERIALS 3. TRENCH BACKFILL A. TYPE "A." MATERIAL OR RECYCLED CRUSHED CONCRETE (TxDOT STANDARD SPECIFICATIONS FOR CONSTRUCTION ITEM 247 FLEXIBLE BASE TYPE D GRADE 1-2, EXCLUDING TYPE A MATERIAL, WITH MINIMUM P.I. OF FOUR), OR PORTLAND CEMENT TREATED BASE (AFTER COMPACTION) COVERED BY 10 MIL. POLYETHYLENE BOND BREAKER) MECHANICALLY COMPACTED TO 95% OF THE MAXIMUM DRY DENSITY. DEFINED AS "CURB BACKFILL" IN SELECT DETAILS.
3. CROSS-SLOPE OF SIDEWALK SHALL BE 1.5% DESIGNED AND FORMED. ANY CROSS-SLOPE CONSTRUCTED LESS THAN 1% OR EXCEEDING 2% SHALL NOT BE ACCEPTED.
4. TOOLED EDGE. MATCH EXISTING GRADE IF EXISTING GRADE IS HIGHER THAN TOP OF CURB. OTHERWISE, AREA BETWEEN CURB AND NEW SIDEWALK MUST BE FILLED AS REQUIRED & GRADED TO DRAIN. FILL SHALL BE COMPACTED TO 85% STANDARD PROCTOR DENSITY, AT OR ABOVE OPTIMUM MOISTURE CONTENT.
5. GRADE/SLOPE SHALL BE WITHIN THE RANGE OF 1/4 IN. PER 1 FT. TO 1/2 IN. PER 1 FT.
6. SLOPE OF BUFFER/LANDSCAPE AREAS WITHIN THE RIGHT-OF-WAY SHALL NOT EXCEED 4%.
7. RESTORE VEGETATION IN KIND TO PRE-PROJECT CONDITIONS. FOR NEW SUBDIVISIONS, COMPLY WITH VEGETATION REQUIREMENTS
8. CURB AND GUTTER PER PLANS AND CITY OF WACO DETAILS.
9. IF EXISTING GRADE IS LOWER THAN NEW BACK OF SIDEWALK, FILL SHALL BE PLACED PER ORDINANCE, SEC. 22-73. - DIMENSIONS-PARKWAY. OUTSIDE OF RIGHT-OF-WAY FILL SHALL BE PLACED WITH MAXIMUM SLOPE OF 25% DOWN TO EXISTING GRADE. FILL SHALL BE COMPACTED TO 85% STANDARD PROCTOR DENSITY AT OR ABOVE OPTIMUM MOISTURE CONTENT.
10. MATCH EXISTING GRADE.
11. CUT TO GRADE.
12. ¾ INCH CHAMFER BOTH SIDES.
13. CONTRACTION JOINTS WITH ¾ IN. CHAMFER ON EACH SIDE SHALL BE PLACED ALONG ENTIRE HEIGHT OF RETAINING WALL AT EQUAL SPACING OF ADJOINING SIDEWALK.
14. FRONT OF RETAINING WALL SHALL BE BROOM FINISHED PER ORDINANCE.
15. WHERE SIDEWALK WITH RETAINING WALL IS SPECIFIED, RETAINING WALL WILL BE SUBSIDIARY TO THE ITEM, "CONCRETE SIDEWALK (SPECIAL) (RETAINING WALL)", WITH LIMITS OF PAY AS SHOWN HEREON.
16. 2 IN. SCH. 40 PVC WEEP HOLES @ 10 FT. OC (TYP) SLOPED ¼ INCH PER FOOT TO DRAIN TOWARD FRONT OF SIDEWALK.
17. 1 CUBIC FOOT WASHED ROCK WRAPPED IN FILTER FABRIC.
18. 1 IN. DIA X 3 FT. SMOOTH DOWELS AT 1 FT OC.
19. 1 IN. PVC PIPE WITH CAPPED END.
20. 1/2 IN. PERMANENT EXPANSION JOINT MATERIAL.

DISCLAIMER: THE USE OF THIS STANDARD IS GOVERNED BY THE "TEXAS ENGINEERING PRACTICE ACT". NO WARRANTY OF ANY KIND IS MADE BY THE CITY OF WACO FOR ANY PURPOSE WHATSOEVER. THE CITY OF WACO ASSUMES NO RESPONSIBILITY FOR THE CONVERSION OF THIS STANDARD TO OTHER FORMATS OR FOR INCORRECT RESULTS OR DAMAGES RESULTING FROM ITS USE.

WACO

ENGINEERING DIVISION

REVISIONS

NO.	COMMENTS	BY	DATE
2	REVISE NOTE 2	MZ	01/27/2023
1	REVISE NOTE 3	MZ	05/16/2022
##	DESCRIPTION	FL	MM/DD/YYYY

DATE 01/10/2022

SW-2

CP&Y, INC.
TEXAS REGISTERED ENGINEERING FIRM
TBPE F-1741

STATE OF TEXAS
DAVID L. MAREK
#83327
REGISTERED
PROFESSIONAL ENGINEER
4-14-2023

NO.	REVISION	BY	DATE

VERIFY SCALE 0 1"
BAR LENGTH EQUALS ONE INCH ON ORIGINAL DRAWING. VERIFY LENGTH ON THIS SHEET AND ADJUST SCALE ACCORDINGLY

CITY OF WACO
SOUTH 11TH STREET IMPROVEMENTS

CITY OF WACO
SIDEWALK DETAILS

DESIGN: DLM
DRAWN: CDG
REVIEW: DLM
CP&Y: CWAC2200923
CLIENT:

SHEET
C807

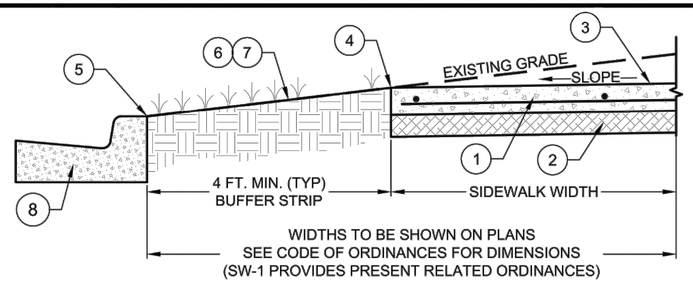

TYPICAL DETAILS OF FRONT OF SIDEWALKS

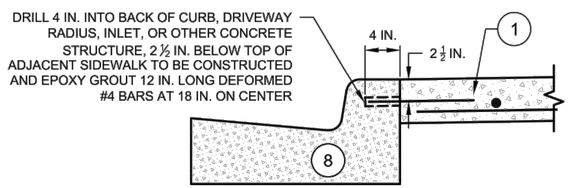

CONSTRUCTION JOINT OF SIDEWALK ADJACENT TO BACK OF CURB, DRIVEWAY RADIUS, INLET, OR OTHER CONCRETE STRUCTURE

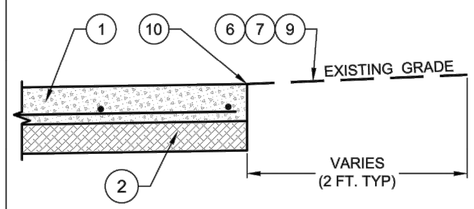

SIDEWALK TO MATCH EXISTING GRADE

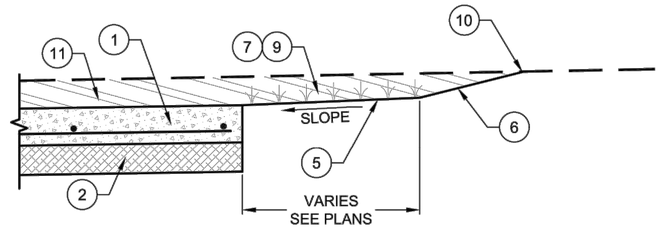

CUT BEHIND SIDEWALK TO MATCH EXISTING GRADE

FOR GENERAL NOTES SEE SHEET SW-1
FOR LEGEND DESCRIPTIONS SEE SHEET SW-2

SIDEWALK DETAILS - 1 OF 2

(NO SCALE)

WACO ENGINEERING DIVISION

REVISIONS

NO.	COMMENTS	BY	DATE
2	ADD CONSTRUCTION JOINT DETAIL	MZ	12/21/2022
1	ADD CODE OF ORDINANCES NOTE	MZ	03/28/2022
##	DESCRIPTION	FL	MM/DD/YYYY

DATE 01/10/2022

SW-3

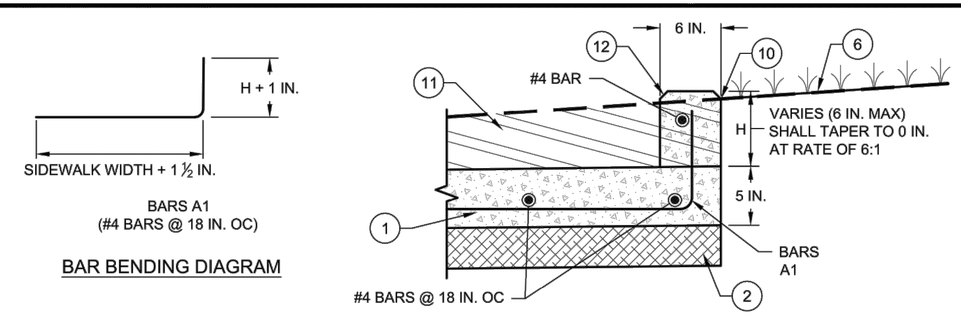

CURB TO MATCH EXISTING GRADE

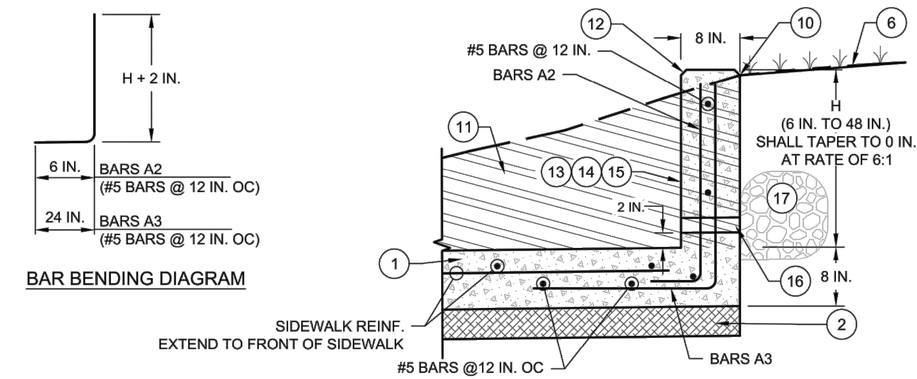

RETAINING WALL MATCH TO EXISTING GRADE

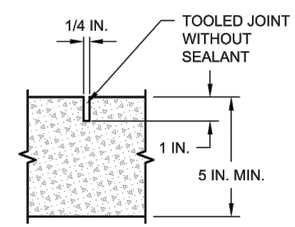

CONTRACTION JOINT

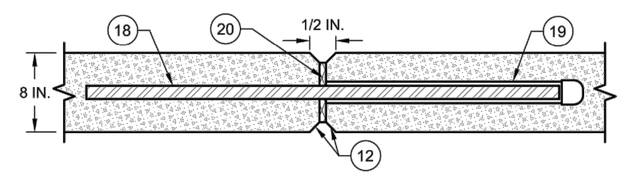

RETAINING WALL EXPANSION JOINT

FOR GENERAL NOTES SEE SHEET SW-1
FOR LEGEND DESCRIPTIONS SEE SHEET SW-2

SIDEWALK DETAILS - 2 OF 2

(NO SCALE)

WACO ENGINEERING DIVISION

REVISIONS

NO.	COMMENTS	BY	DATE
##	DESCRIPTION	FL	MM/DD/YYYY

DATE 01/10/2022

SW-4

CP&Y, INC.
TEXAS REGISTERED ENGINEERING FIRM
TBPE F-1741

STATE OF TEXAS
DAVID L. MAREK
#83327
REGISTERED
PROFESSIONAL ENGINEER
4-14-2023

NO.	REVISION	BY	DATE

VERIFY SCALE 0 1"
BAR LENGTH EQUALS ONE INCH ON ORIGINAL DRAWING. VERIFY LENGTH ON THIS SHEET AND ADJUST SCALE ACCORDINGLY

CITY OF WACO
SOUTH 11TH STREET IMPROVEMENTS

CITY OF WACO
SIDEWALK DETAILS

DESIGN: DLM
DRAWN: CDG
REVIEW: DLM
CP&Y: CWAC2200923
CLIENT:

SHEET
C808

PRINTED BY: emcdougald DATE: 4/12/2023
FILE PATH: G:\Projects\CWAC2200923-11th and Mary\08_Plans_Drawings\20_Sheets\2200923-C80-DETAILS.dwg, C808

G:\Projects\CWAC2200923-11th and Mary\08_Plans_Drawings\20_Sheets\2200923-C80\DETAILS.dwg, C808, 4/12/2023 1:12:07 PM, 1:1

TRAFFIC CONTROL PLANS

GENERAL REQUIREMENTS

- MUST CONFORM WITH CURRENT TEXAS MUTCD STANDARD
- MULTIPLE PHASES OF CONSTRUCTION WILL REQUIRE A SEPARATE TCP FOR EACH PHASE. ALL MAY BE SUBMITTED AT ONE TIME FOR ACCEPTANCE.
- MUST BE DEVELOPED TO ADDRESS THE SPECIFIC CONDITIONS OF THE PLANNED CONSTRUCTION WORK ZONE LOCATION.
- MUST BE COMPILED BY TEXAS LICENSED PROFESSIONAL ENGINEER

TCP SUBMITTAL PROCESS:

- THE TCP SHALL BE SUBMITTED TO THE CITY OF WACO TRAFFIC ENGINEERING OFFICE 15 CALENDAR DAYS PRIOR TO THE ANTICIPATED START DATE, WITH COPY OF CURRENT CERTIFICATION.
- ALL SUBMITTALS SHALL BE IN PORTABLE DOCUMENT FORMAT (.pdf) AND SENT VIA EMAIL TO TCP_SUBMITTAL@WACOTX.GOV, EXCEPT THAT CITY OF WACO PROJECTS IN PROJECTMATES SHALL BE SUBMITTED THROUGH THE PORTAL AT: HTTPS://CITYOFWACO.PROJECTMATES.COM.

LOCAL ROADS

- TCP REQUIRED FOR ANY LANE OR ROAD CLOSURES EXCEEDING 4 HOURS
- MAY UTILIZE TX MUTCD TYPICAL DETAILS INSTEAD OF A SITE-SPECIFIC TCP

COLLECTORS & ARTERIALS

- TCP REQUIRED FOR ANY LANE OR ROAD CLOSURES REGARDLESS OF DURATION
- TCP MUST BE SITE-SPECIFIC TO ADDRESS THE SPECIFIC CONDITIONS OF THE CORRIDOR AND ACCESS TO ADJACENT PROPERTIES
- LANE CLOSURES WILL REQUIRE ARROW BOARDS
- ROAD CLOSURES MAY REQUIRE DYNAMIC MESSAGE BOARDS TO PROVIDE PRIOR WARNING AHEAD OF START DATE
- NO INTERFERENCE WITH TRAFFIC FLOW SHALL BE PERMITTED DURING THE HOURS OF 6:30 A.M. TO 9:30 A.M. AND 3:30 P.M. TO 6:30 P.M., MONDAYS THROUGH FRIDAYS, UNLESS DIRECTED OTHERWISE BY THE DIRECTOR OF PUBLIC WORKS. EMERGENCY CLOSURES DURING THESE HOURS SHALL BE WITH THE APPROVAL OF THE DIRECTOR OF PUBLIC WORKS.

OTHER INFORMATION

- LANE OR ROAD CLOSURES ALONG STATE FACILITIES REQUIRE TXDOT APPROVAL
- REFERENCE CITY ORDINANCE: SEC. 23-25 TRAFFIC CONTROL

TCP IMPLEMENTATION

- CONTRACTOR SHALL PROVIDE A DESIGNATED CONTRACTOR'S RESPONSIBLE PERSON (CRP) FOR IMPLEMENTATION AND MAINTENANCE OF IMPLEMENTED TRAFFIC CONTROL PLAN.
- CONTRACTOR WILL HAVE TXDOT APPROVED TRAINING UNDER THE MATERIAL PRODUCER LIST HTTPS://WWW.TXDOT.GOV/BUSINESS/RESOURCES/PRODUCER-LIST.HTML

WACO

ENGINEERING DIVISION

REVISIONS			
NO.	COMMENTS	BY	DATE
##	DESCRIPTION	FL	MM/DD/YYYY

DATE 07/01/2022

T-1

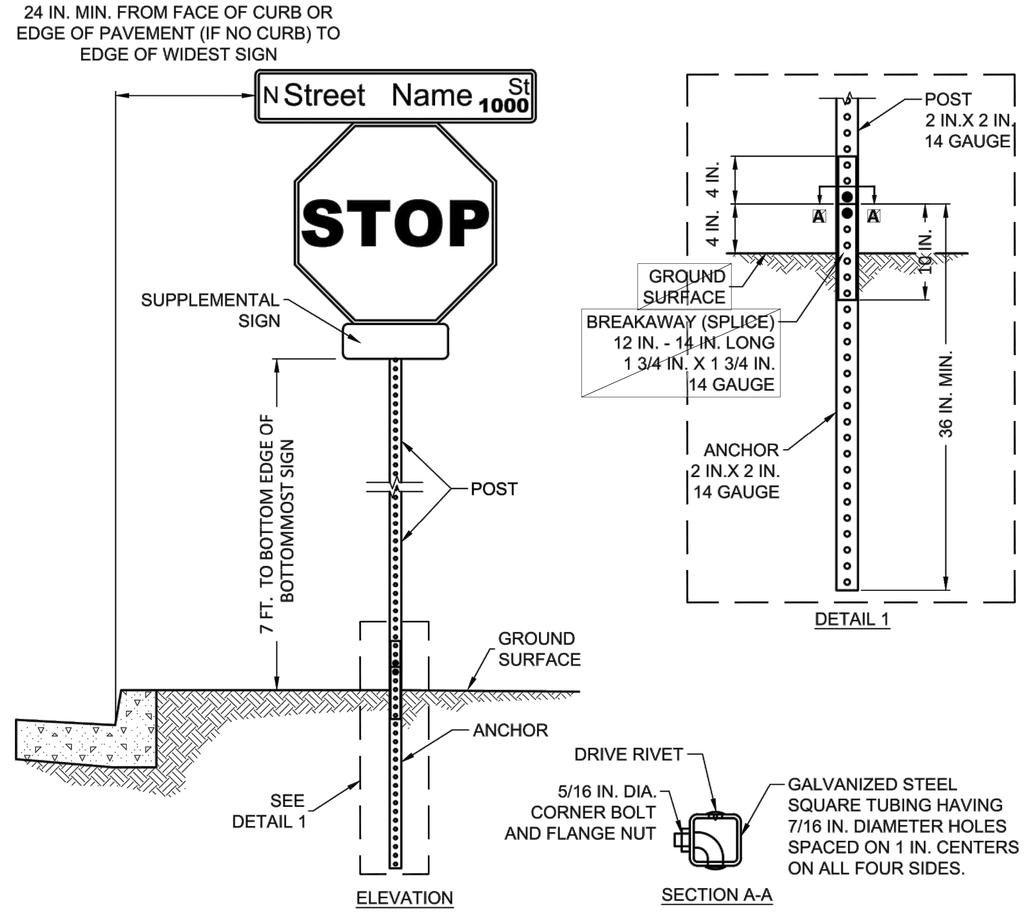

NOTES:

1. SIGN AND SIGN POST SHALL BE TWO SEPARATE PAY ITEMS.
2. SIGN POST SHALL BE PLUMB (TRUE VERTICAL) IN ALL DIRECTIONS, AND SIGNS SHALL BE BE PERPENDICULAR TO POST.
3. SIGN SHALL BE FASTENED TO POST USING JUMBO HEAD DRIVE RIVETS.
4. IF TRAFFIC CONTROL SIGN (E.G., STOP, YIELD) IS REQUIRED, IT SHALL BE LOCATED BELOW THE STREET NAME SIGN.
5. SUPPLEMENTAL SIGN(S) SHALL BE LOCATED BELOW THE TRAFFIC CONTROL SIGN.
6. DRIVE RIVETS SHALL BE JUMBO HEAD, SHALL HAVE 3/8 INCH DIAMETER SHANK, AND SHALL HAVE A 1 INCH DIAMETER HEAD.
7. ANCHOR POST SHALL BE DRIVEN INTO THE GROUND OR SET IN 3000 PSI CONCRETE HAVING 1 FOOT DIAMETER AND A 26 INCH DEPTH. ANCHOR POST SHALL BE WRAPPED IF IT IS SET IN CONCRETE.

SIGN POST INSTALLATION

(NO SCALE)

DISCLAIMER: THE USE OF THIS STANDARD IS GOVERNED BY THE "TEXAS ENGINEERING PRACTICE ACT". NO WARRANTY OF ANY KIND IS MADE BY THE CITY OF WACO FOR ANY PURPOSE WHATSOEVER. THE CITY OF WACO ASSUMES NO RESPONSIBILITY FOR THE CONVERSION OF THIS STANDARD TO OTHER FORMATS OR FOR INCORRECT RESULTS OR DAMAGES RESULTING FROM ITS USE.

WACO

ENGINEERING DIVISION

REVISIONS			
NO.	COMMENTS	BY	DATE
##	DESCRIPTION	FL	MM/DD/YYYY

DATE 07/01/2022

T-6

CP&Y, INC.
TEXAS REGISTERED ENGINEERING FIRM TBPE F-1741

STATE OF TEXAS — DAVID L. MAREK #83327 — REGISTERED PROFESSIONAL ENGINEER — 4-14-2023

NO.	REVISION	BY	DATE

VERIFY SCALE 0 1"
BAR LENGTH EQUALS ONE INCH ON ORIGINAL DRAWING. VERIFY LENGTH ON THIS SHEET AND ADJUST SCALE ACCORDINGLY

CITY OF WACO
SOUTH 11TH STREET IMPROVEMENTS

CITY OF WACO
SIDEWALK DETAILS

DESIGN: DLM
DRAWN: CDG
REVIEW: DLM
CP&Y: CWAC2200923
CLIENT:

SHEET
C809

WATER GENERAL NOTES

1. PVC WATER MAIN COLOR SHALL BE BLUE.
2. ALL WATER LINES SHALL BE COMPLETE IN PLACE INCLUDING ALL BENDS, BLOCKS, FITTINGS, SERVICES AND APPURTENANCES BEFORE PRESSURE TESTING.
3. SURFACE REPLACEMENT SHALL BE INCLUDED IN THE UNIT PRICE FOR WATER SERVICES.
4. PLACE METALLIC TRACER WIRE ON TOP OF EMBEDMENT PRIOR TO PLACEMENT OF WATER LINE AND CONNECT TO EACH SERVICE, VALVE AND FIRE HYDRANT. SEE DETAIL W-34
5. METALLIC TRACER WIRE SHALL BE #12 AWG SOLID WIRE WITH A BLUE COATING. LOCATOR WIRE MUST TERMINATE IN AN APPROVED TRACER WIRE BOX. SEE DETAIL W-34
6. ALL DUCTILE IRON WATER PIPE AND FITTINGS MUST BE POLY-WRAPPED PER CITY SPECIFICATIONS.
7. A STAMPED "W" OF 4 IN. IN HEIGHT AND 3/8 IN. IN DEPTH SHALL BE PLACED IN THE CENTER OF FACE OF CURB AT EACH NEW SERVICE LOCATION AND IN ANY NEW CURB AT EXISTING SERVICES.
8. ALL COPPER SERVICE PIPE MUST BE TYPE K-SOFT.
9. ALL POLYETHELINE SERVICE PIPE SHALL BE SDR-9 WITH EXTERIOR BLUE COLOR. CONTRACTOR SHALL USE 1 IN. OR 2 IN. CTS TUBING WITH STAINLESS STEEL INSERTS. ALL PIPE MUST MEET NSF 61, AWWA C901, ASTM D3350 AND ASTM D2737 STANDARD SPECIFICATIONS.
10. 3/4 IN. WASHED ROCK SHALL MEET THE REQUIREMENTS OF STANDARD SPECIFICATIONS FOR CONSTRUCTION ITEM A.2.a, CRUSHED STONE EMBEDMENT, OF SECTION 4.2 PART 2, EXCEPT THE GRADATION SHALL BE:

3/4 IN. WASHED ROCK	
SIEVE	PERCENTAGE RETAINED
1 1/2 IN.	0%
3/4 IN.	100%

11. ALL SUBSTITUTIONS FOR USE AS A PRE-APPROVED EQUAL MUST BE SUBMITTED IN WRITING, AND APPROVED BY CITY ENGINEER, IN ADVANCE, IN ACCORDANCE WITH THE CURRENT VERSION OF THE CITY OF WACO STANDARD SPECIFICATIONS FOR CONSTRUCTION.
12. ANY DEVIATION FROM STANDARD DETAILS MUST BE SIGNED AND SEALED BY A PROFESSIONAL ENGINEER AND APPROVED IN WRITING BY CITY ENGINEER.

WATER SERVICE TAP NOTES

13. WHERE NEW WATER SERVICES ARE INSTALLED UNDER EXISTING CURB AND GUTTER, THE CONTRACTOR WILL HAVE THE FOLLOWING OPTIONS:
    A. REMOVE AND REPLACE CURB AND GUTTER SECTION FROM JOINT TO JOINT, TYPICALLY 10 FT.
    B. CONSTRUCT MINIMUM SIZE TUNNEL NECESSARY TO INSTALL NEW WATER SERVICE AND THEN PLACE CONTROLLED LOW STRENGTH MATERIAL BENEATH THE EXISTING CURB AND GUTTER.
    C. INSTALL SERVICE THROUGH A HOLE AT THE SAME LOCATION AS THE EXISTING PIPE, AND APPROXIMATELY THE SAME DIAMETER AS THE EXISTING PIPE.
14. ALL SERVICE TAPS MUST BE MADE UNDER PRESSURE AND FLUSHED, OR TAPPED DRY AND THEN HAVE A SWAB PULLED THROUGH THE PIPE BEFORE CONNECTING THE TAPPED PIPE TO THE MAIN.
15. 1-1/2 IN. AND 2 IN. METERS MUST BE BROUGHT TO THE WATER OFFICE TO BE TESTED. 3 IN. AND LARGER ARE TESTED IN THE FIELD BEFORE SERVICE IS APPROVED.
16. ALL 1-1/2 IN. AND LARGER METERS SHALL BE SENSUS OMNI METERS WITH ITRON CONNECTORS.
17. ALL EXTERNAL NUTS, BOLTS AND WASHERS SHALL BE STAINLESS STEEL.
18. ALL SERVICE TAPS MUST BE APPROVED IN ADVANCE BY THE CITY OF WACO AND MUST BE PERFORMED UNDER THE DIRECT SUPERVISION OF A DESIGNATED CITY OF WACO UTILITY INSPECTOR. A MINIMUM OF 24 HOURS NOTICE MUST BE GIVEN.

WACO

ENGINEERING DIVISION

REVISIONS			
NO.	COMMENTS	BY	DATE
##	DESCRIPTION	FL	MO/DY/YEAR

DATE 8/25/2021

W-1

GENERAL NOTES:

1. SEE W-1 AND W-4 FOR ADDITIONAL GENERAL NOTES.
2. ALL CALCULATIONS ARE BASED ON INTERNAL PRESSURE OF 200 PSI FOR 24 IN. I.D. PIPE AND SMALLER AND 150 PSI ON 30 IN. AND LARGER.
3. VOLUMES OF VERTICAL BEND THRUST BLOCKS ARE NET VOLUMES OF CONCRETE TO BE FURNISHED. THE CORRESPONDING WEIGHT OF THE CONCRETE (4000 LB/C.Y.) IS EQUAL TO OR GREATER THAN THE VERTICAL COMPONENT OF THRUST ON THE VERTICAL BEND.
4. CONCRETE FOR ALL BEARING SURFACES OF THRUST BLOCKS SHALL BE PLACED AGAINST UNDISTURBED EARTH OR ROCK.
5. WALL THICKNESS (T) ASSUMED HERE FOR ESTIMATING PURPOSES ONLY.
6. CONCRETE FOR BLOCKING SHALL BE 2000 PSI CONCRETE.
7. DIMENSIONS MAY BE VARIED AS REQUIRED BY FIELD CONDITIONS WHERE AND AS DIRECTED BY THE ENGINEER. THE VOLUME OF CONCRETE BLOCKING SHALL NOT BE LESS THAN SHOWN HERE.
8. PRIOR TO CONSTRUCTION, CONTRACTOR SHALL SUBMIT TO THE PUBLIC WORKS DEPARTMENT A LISTING OF ALL MATERIALS TO BE USED. NO WORK SHALL BE UNDERTAKEN PRIOR TO WRITTEN APPROVAL OF THE MATERIAL LIST BY THE CITY PUBLIC WORKS DEPARTMENT.
9. CONCRETE SHALL NOT EXTEND BEYOND JOINTS.
10. USE 6 MIL POLYETHYLENE WRAP OR EQUAL BETWEEN CONCRETE AND BENDS TO PREVENT CONCRETE FROM STICKING TO BENDS.
11. PRE-PACKAGED CONCRETE MIX OR EQUIVALENT WILL ONLY BE APPROVED ON LINES 12 IN. AND SMALLER DIAMETER WITH JOINT RESTRAINTS.
    - VOLUMETRIC CONCRETE MIXER TRUCK CONCRETE WILL BE PERMITTED FOR THRUST BLOCKS.
    - SUBMITTALS OF MIX OR PRODUCT MUST BE PROVIDED.
    - FOR NON-PLANT BATCHED CONCRETE FOR THRUST BLOCK LOCATIONS OF 2 CY OR LESS, MATERIAL SAMPLING AND TESTING FOR COMPRESSIVE STRENGTH WILL BE REQUIRED AT COST OF DEVELOPER'S CONTRACTOR. A MINIMUM OF ONCE PER FIRST USE ON PROJECT AND AS REQUIRED BY THE ENGINEERING INSPECTOR.
    - LOCATIONS WITH QUANTITIES GREATER THAN 2 CY SHALL BE PLACED WITH EITHER PLANT BATCHED CONCRETE DELIVERED BY CONCRETE MIXING TRUCK(S) OR VOLUMETRIC CONCRETE MIXER TRUCK CONCRETE.

GENERAL NOTES: THRUST BLOCKS

WACO

ENGINEERING DIVISION

REVISIONS			
NO.	COMMENTS	BY	DATE
##	DESCRIPTION	FL	MO/DY/YEAR

DATE 8/25/2021

W-3A

CP&Y, INC.
TEXAS REGISTERED ENGINEERING FIRM
TBPE F-1741

STATE OF TEXAS
DAVID L. MAREK
#83327
REGISTERED
PROFESSIONAL ENGINEER
4-14-2023

NO.	REVISION	BY	DATE

VERIFY SCALE 0 1"
BAR LENGTH EQUALS ONE INCH ON ORIGINAL DRAWING. VERIFY LENGTH ON THIS SHEET AND ADJUST SCALE ACCORDINGLY.

CITY OF WACO
SOUTH 11TH STREET IMPROVEMENTS

CITY OF WACO
SIDEWALK DETAILS

DESIGN: DLM
DRAWN: CDG
REVIEW: DLM
CP&Y: CWAC2200923
CLIENT:

SHEET
C810

PRINTED BY: emcdougald DATE: 4/12/2023
FILE PATH: G:\Projects\CWAC2200923-11th and Mary\08_Plans_Drawings\20_Sheets\2200923-C80-DETAILS.dwg, C810

G:\Projects\CWAC2200923-11th and Mary\08_Plans_Drawings\20_Sheets\2200923-C80-DETAILS.dwg, C810, 4/12/2023 11:21:11 PM, 1:1

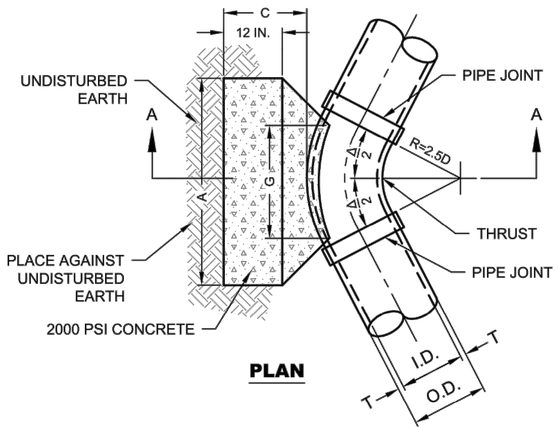

PLAN

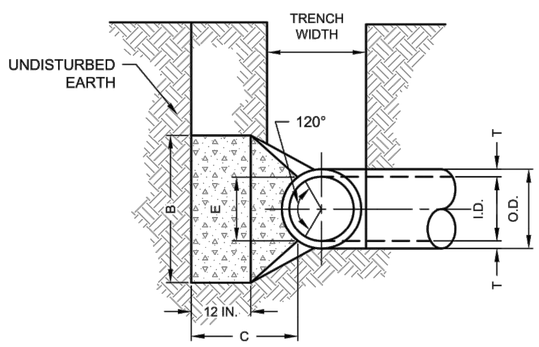

SECTION A-A

I.D. (IN.)	T (IN.)	C 11.25º FT	C 22.50º+ FT	E FT.	I.D. (IN.)
4,6,8	0.4	1.5	1.5	0.9	4,6,8
10,12	0.5	1.5	1.5	1.2	10,12
16,18	0.6	1.5	1.5	1.6	16,18
20	0.4	1.5	1.5	1.8	20
24	0.9	1.5	1.5	2.1	24
30	2.9	1.5	1.9	2.6	30
36	4.5	1.5	2.3	3.3	36
42	5.0	1.8	2.6	3.8	42
48	5.5	2.0	3.0	4.3	48
54	6.0	2.3	3.4	0.8	54
60	6.5	2.5	3.8	5.3	60
66	6.8	2.8	4.1	5.7	66
72	7.5	3.0	4.5	6.3	72
78	7.5	3.3	4.9	6.7	78
84	8.0	3.5	5.3	7.2	84
90	8.5	3.8	5.6	7.7	90
96	9.0	4.0	6.0	8.2	96

SEE W-3A FOR GENERAL NOTES

TYPICAL HORIZONTAL THRUST BLOCK

(NO SCALE)

SEE W-3C FOR ADDITIONAL DETAILS

WACO

ENGINEERING DIVISION

REVISIONS

NO.	COMMENTS	BY	DATE

##	DESCRIPTION	FL	MO/DY/YEAR

DATE 8/25/2021

W-3B

I.D. (IN.)	Δ = 11.25º G FT.	THRUST TONS	EARTH A FT.	EARTH B FT.	EARTH VOLUME C.Y.	ROCK A FT.	ROCK B FT.	ROCK VOLUME C.Y.	I.D. (IN.)
4,6,8	0.4	1.0	1.0	1.5	0.1	1.0	1.0	0.1	4,6,8
10,12	0.6	2.2	1.5	1.5	0.1	1.0	1.5	0.1	10,12
16,18	0.8	5.0	2.0	2.5	0.3	1.5	2.0	0.2	16,18
20	0.9	6.2	2.0	3.5	0.4	1.5	3.0	0.3	20
24	1.1	8.9	3.0	3.0	0.5	1.5	3.0	0.3	24
30	1.4	10.4	3.0	4.5	0.6	2.0	3.5	0.4	30
36	1.7	15.0	3.5	5.0	0.9	2.0	4.0	0.5	36
42	1.9	20.4	4.5	6.0	1.5	2.5	5.0	0.8	42
48	2.2	26.6	4.5	6.0	2.0	2.5	6.0	1.1	48
54	2.5	33.7	6.0	7.0	3.0	3.0	6.0	1.4	54
60	2.7	41.6	6.0	8.0	3.8	3.0	7.0	1.8	60
66	3.0	50.3	6.5	8.0	5.1	3.5	8.0	2.7	66
72	3.3	59.9	7.5	9.0	6.3	4.0	8.0	3.3	72
78	3.6	40.2	8.0	10.0	8.1	4.0	9.0	3.9	78
84	3.9	81.5	8.5	10.0	10.3	4.5	10.0	5.3	84
90	4.1	93.5	9.5	10.0	12.2	5.0	10.0	6.3	90
96	4.4	106.4	10.0	11.0	15.0	5.0	11.0	7.4	96

I.D. (IN.)	Δ = 22.50º G FT.	THRUST TONS	EARTH A FT.	EARTH B FT.	EARTH VOLUME C.Y.	ROCK A FT.	ROCK B FT.	ROCK VOLUME C.Y.	I.D. (IN.)
4,6,8	0.8	2.0	1.5	1.5	0.1	1.0	1.0	0.1	4,6,8
10,12	1.1	4.4	2.0	2.5	0.3	1.5	1.5	0.1	10,12
16,18	1.6	9.9	2.0	3.5	0.6	2.0	2.5	0.3	16,18
20	1.8	12.6	3.5	3.5	0.7	2.0	3.5	0.4	20
24	2.2	17.7	4.0	4.5	1.0	3.0	3.0	0.5	24
30	2.7	20.7	5.0	4.5	1.5	3.0	4.0	0.8	30
36	3.3	29.8	5.5	5.5	2.3	4.0	4.0	1.3	36
42	3.8	40.5	7.0	6.0	3.9	4.5	5.0	2.1	42
48	4.4	52.9	8.0	7.0	5.7	4.5	6.0	2.8	48
54	4.9	67.0	9.0	8.0	8.0	6.0	6.0	4.1	54
60	5.5	82.7	9.5	9.0	10.6	6.0	7.0	5.3	60
66	6.0	100.1	10.5	10.0	14.1	6.5	8.0	7.2	66
72	6.6	119.1	11.0	11.0	17.6	7.5	8.0	9.1	72
78	7.1	139.8	12.0	12.0	22.5	8.0	9.0	11.7	78
84	7.6	162.1	13.0	12.5	27.2	8.5	10.0	14.8	84
90	8.2	186.1	14.0	13.5	33.7	9.5	10.0	17.7	90
96	8.7	211.7	15.0	14.5	41.2	10.0	11.0	21.8	96

I.D. (IN.)	Δ = 30º G FT.	THRUST TONS	EARTH A FT.	EARTH B FT.	EARTH VOLUME C.Y.	ROCK A FT.	ROCK B FT.	ROCK VOLUME C.Y.	I.D. (IN.)
4,6,8	1.0	2.6	2.0	1.5	0.2	1.0	1.5	0.1	4,6,8
10,12	1.5	5.9	2.5	2.5	0.3	2.0	1.5	0.2	10,12
16,18	2.2	13.2	3.5	4.0	0.8	2.5	3.0	0.4	16,18
20	2.4	16.3	4.5	4.0	1.0	3.0	3.0	0.5	20
24	2.9	23.4	6.0	4.0	1.4	3.5	3.5	0.7	24
30	3.6	27.5	5.5	5.0	1.9	3.5	4.0	0.9	30
36	4.4	39.5	7.0	6.0	3.4	4.5	4.5	1.6	36
42	51.0	53.8	8.0	7.0	5.1	5.5	5.0	2.5	42
48	5.8	70.3	9.0	8.0	7.4	6.0	6.0	3.7	48
54	6.5	89.0	10.0	9.0	10.3	7.0	6.5	5.3	54
60	7.3	110.0	11.0	10.0	13.9	7.5	7.5	7.3	60
66	8.0	132.9	12.5	11.0	18.9	8.5	8.0	9.6	66
72	8.7	158.2	13.5	12.0	24.0	9.0	9.0	12.3	72
78	9.4	185.6	14.5	13.0	30.0	10.0	9.5	15.6	78
84	10.1	215.3	15.5	14.0	37.1	10.5	10.5	19.5	84
90	10.9	247.1	16.5	15.0	45.0	11.5	11.0	23.9	90
96	11.6	281.2	18.0	16.0	55.0	12.5	11.5	28.9	96

I.D. (IN.)	Δ = 45º G FT.	THRUST TONS	EARTH A FT.	EARTH B FT.	EARTH VOLUME C.Y.	ROCK A FT.	ROCK B FT.	ROCK VOLUME C.Y.	I.D. (IN.)
4,6,8	1.5	3.9	2.0	2.0	0.2	1.5	1.5	0.1	4,6,8
10,12	2.2	8.7	3.5	2.5	0.5	2.0	2.5	0.3	10,12
16,18	3.2	19.5	4.5	4.5	1.2	3.0	3.5	0.6	16,18
20	3.6	24.1	5.5	4.5	1.5	3.5	3.5	0.7	20
24	4.3	34.6	8.0	4.5	2.3	4.5	4.0	1.1	24
30	5.4	40.6	8.5	5.0	3.2	5.5	4.0	1.6	30
36	6.5	58.5	10.0	6.0	5.3	6.5	4.5	2.6	36
42	7.5	79.6	11.5	7.0	8.1	8.0	5.0	4.2	42
48	8.6	104.0	13.0	8.0	11.9	9.0	6.0	6.3	48
54	9.7	131.5	15.0	9.0	17.1	10.5	6.5	8.9	54
60	10.7	162.4	16.5	10.0	23.1	11.0	7.5	12.0	60
66	11.8	196.5	18.0	11.0	30.1	12.0	8.5	16.2	66
72	12.9	233.9	19.5	12.0	38.6	14.0	8.5	20.7	72
78	13.9	274.5	21.5	13.0	49.8	14.5	9.5	25.9	78
84	15.0	318.4	23.0	14.0	61.2	15.5	10.5	32.6	84
90	16.1	365.5	24.5	15.0	74.5	17.5	10.5	39.6	90
96	17.1	415.6	26.0	16.0	89.5	18.5	11.5	48.5	96

I.D. (IN.)	Δ = 67.5º G FT.	THRUST TONS	EARTH A FT.	EARTH B FT.	EARTH VOLUME C.Y.	ROCK A FT.	ROCK B FT.	ROCK VOLUME C.Y.	I.D. (IN.)
4,6,8	2.1	5.6	3.0	2.0	0.3	2.0	1.5	0.2	4,6,8
10,12	3.1	12.6	5.5	2.5	0.8	3.5	2.0	0.4	10,12
16,18	4.7	28.3	7.5	4.0	1.9	5.0	3.0	0.9	16,18
20	5.2	34.9	9.0	4.0	2.3	5.5	3.5	1.2	20
24	6.2	50.3	11.5	4.5	3.2	6.5	4.0	1.6	24
30	7.8	58.9	12.0	5.0	4.8	7.5	4.0	2.2	30
36	9.4	84.9	14.5	6.0	5.2	9.5	4.5	3.8	36
42	10.9	115.5	17.0	7.0	12.8	11.0	5.5	6.3	42
48	12.5	150.9	19.0	8.0	18.4	13.0	6.0	9.2	48
54	14.0	191.0	21.5	9.0	26.0	15.0	6.5	12.9	54
60	15.6	235.8	24.0	10.0	35.6	16.0	7.5	17.6	60
66	17.1	285.3	26.0	11.0	46.0	18.0	8.0	23.0	66
72	18.7	339.5	28.5	12.0	57.8	19.0	9.0	28.4	72
78	20.2	398.5	31.0	13.0	75.7	21.0	9.5	37.4	78
84	21.8	462.1	33.5	14.0	94.7	22.0	10.5	46.5	84
90	23.3	530.5	35.5	15.0	114.4	24.5	11.0	58.2	90
96	24.9	603.5	38.0	16.0	138.9	25.5	12.0	71.0	96

I.D. (IN.)	Δ = 90º G FT.	THRUST TONS	EARTH A FT.	EARTH B FT.	EARTH VOLUME C.Y.	ROCK A FT.	ROCK B FT.	ROCK VOLUME C.Y.	I.D. (IN.)
4,6,8	2.7	7.1	5.0	1.5	0.4	2.0	2.0	0.2	4,6,8
10,12	4.0	16.0	6.5	2.5	1.0	3.5	2.5	0.5	10,12
16,18	6.0	36.0	9.0	4.0	2.4	4.5	4.0	1.0	16,18
20	6.6	44.4	10.0	4.5	3.1	6.0	4.0	1.5	20
24	7.9	64.0	14.5	4.5	5.0	8.0	4.0	2.1	24
30	9.9	75.0	15.0	5.0	6.7	10.0	4.0	3.3	30
36	11.9	108.0	18.0	6.0	11.4	12.0	4.5	5.3	36
42	13.9	147.0	21.0	7.0	17.8	17.0	5.5	8.7	42
48	15.9	192.0	24.0	8.0	23.2	16.0	6.0	12.4	48
54	17.9	243.0	27.0	9.0	36.9	18.0	7.0	18.1	54
60	19.9	299.8	30.0	10.0	50.3	20.0	7.5	21.0	60
66	21.8	362.8	33.0	11.0	66.2	22.0	8.5	32.5	66
72	23.8	431.8	36.0	12.0	85.6	24.0	9.0	41.0	72
78	25.7	506.7	39.0	13.0	128.2	26.0	10.0	53.2	78
84	28.8	587.7	42.0	14.0	134.4	28.0	10.5	64.8	84
90	29.0	674.6	45.0	15.0	164.9	30.0	11.5	81.2	90
96	31.6	707.5	48.0	16.0	199.0	32.0	12.0	95.1	96

TYPICAL HORIZONTAL THRUST BLOCK

SEE W-3A FOR GENERAL NOTES

(NO SCALE)

SEE W-3B FOR ADDITIONAL DETAILS

WACO

ENGINEERING DIVISION

REVISIONS

NO.	COMMENTS	BY	DATE

##	DESCRIPTION	FL	MO/DY/YEAR

DATE 8/25/2021

W-3C

CP&Y, INC.
TEXAS REGISTERED ENGINEERING FIRM
TBPE F-1741

STATE OF TEXAS
DAVID L. MAREK
#83327
REGISTERED
PROFESSIONAL ENGINEER
4-14-2023

NO.	REVISION	BY	DATE

VERIFY SCALE 0 1"
BAR LENGTH EQUALS ONE INCH ON ORIGINAL DRAWING; VERIFY LENGTH ON THIS SHEET AND ADJUST SCALE ACCORDINGLY

CITY OF WACO
SOUTH 11TH STREET IMPROVEMENTS

CITY OF WACO
SIDEWALK DETAILS

DESIGN: DLM
DRAWN: CDG
REVIEW: DLM
CP&Y: CWAC2200923
CLIENT:

SHEET
C811

PRINTED BY: emcdougald DATE: 4/12/2023
FILE PATH: G:\Projects\CWAC2200923-11th and Mary\08_Plans_Drawings\20_Sheets\2200923-C80-DETAILS.dwg, C811

G:\Projects\CWAC2200923-11th and Mary\08_Plans_Drawings\20_Sheets\2200923-C80-DETAILS.dwg, C811, 4/12/2023 1:12:12 PM, 1:1

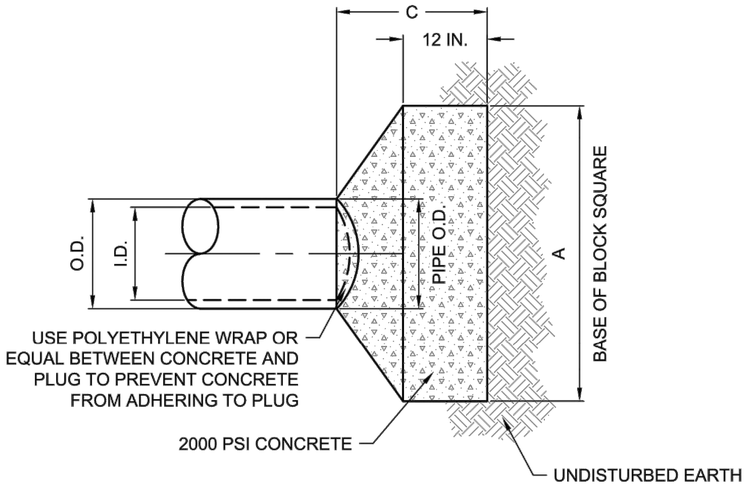

PLAN OF PLUG THRUST BLOCK

(NO SCALE)

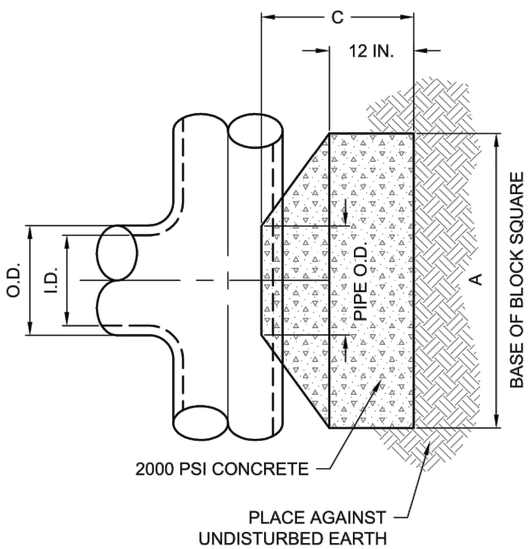

PLAN OF TEE THRUST BLOCK

(NO SCALE)

I.D. (IN.)	TEES & PLUGS THRUST TONS	C FT.	EARTH A FT.	EARTH VOLUME C.Y.	ROCK A FT.	ROCK VOLUME C.Y.	I.D. (IN.)
4,6,8	5.1	1.5	2.5	0.3	2.0	0.2	4,6,8
10,12	11.3	1.5	3.5	0.6	2.5	0.3	10,12
16,18	25.5	2.0	5.5	1.9	4.0	0.9	16,18
20	31.5	2.0	6.0	1.9	4.0	0.9	20
24	45.2	2.5	7.0	3.1	5.0	1.7	24
30	53.0	3.0	7.5	4.1	5.5	2.4	30
36	46.3	4.0	9.0	7.3	6.5	4.2	36
42	104.0	4.5	10.5	11.0	7.5	6.2	42
48	136.0	5.0	12.0	15.6	8.5	8.7	48
54	172.0	5.5	13.5	21.4	9.5	11.9	54
60	212.0	6.0	15.0	28.4	10.5	15.7	60
66	257.0	6.5	16.6	36.8	11.5	20.5	66
72	305.0	7.5	17.5	47.2	12.5	27.2	72
78	358.0	8.0	19.0	58.9	13.5	33.7	78
84	416.0	8.5	20.5	72.3	14.5	41.2	84
90	477.0	9.0	22.0	87.7	15.5	49.7	90
96	543.0	9.5	23.5	104.8	16.5	61.0	96

SEE W-3A FOR GENERAL NOTES

TEE AND PLUG THRUST BLOCKS

WACO ENGINEERING DIVISION

REVISIONS

NO.	COMMENTS	BY	DATE
##	DESCRIPTION	FL	MO/DY/YEAR

DATE 8/25/2021

W-3D

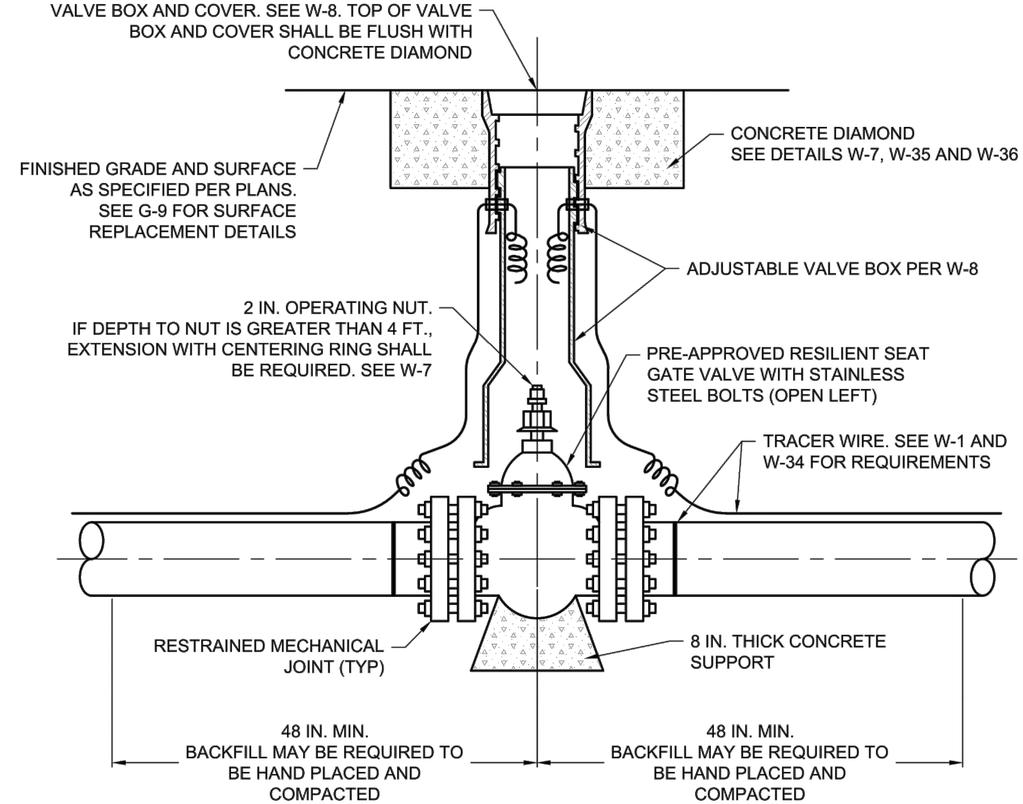

NOTES:

1. GATE VALVES SHALL BE DUCTILE IRON BODY, RESILIENT SEAT TYPE, WITH NON-RISING STEM, OPEN LEFT, 200 PSI WORKING PRESSURE AND CONFORM TO AWWA STANDARD C509 FOR RESILIENT SEATED GATE VALVES. T-HEAD BOLTS SHALL BE COR-BLUE, OTHER NUTS AND BOLTS SHALL BE STAINLESS STEEL.
2. ACCEPTABLE MANUFACTURERS ARE MUELLER, CLOW OR AFC.
3. CARE SHALL BE TAKEN WHEN INSTALLING VALVES TO ASSURE PROPER SUPPORT WHERE REQUIRED.
4. VALVES SHALL NOT BE PLACED IN CONCRETE VALLEY OR GUTTERS.
5. VALVE AND FITTING SHALL BE POLY-WRAPPED PER SPECIFICATIONS.
6. VALVE BOXES SHALL BE ADJUSTED TO FINAL FINISHED GRADE BY CONTRACTOR.
7. ALL VALVES SHALL BE OPEN LEFT (COUNTER-CLOCKWISE)
8. VALVE BOX SHALL NOT BE SUPPORTED BY THE WATER LINE.
9. VALVE BOX TO BE PLUMB AND CENTERED OVER OPERATING NUT.
10. VALVE BOX DETAILS SHALL APPLY TO BOTH NEW INSTALLATIONS AND ADJUSTMENT OF EXISTING VALVES.
11. WHEN ADJUSTING EXISTING VALVE BOXES, RECONNECT EXISTING TRACER WIRE IF PRESENT.

GATE VALVE AND VALVE BOX

(NO SCALE)

WACO ENGINEERING DIVISION

REVISIONS

NO.	COMMENTS	BY	DATE
1	UPDATE REF TO STD DETAIL AND REPLACE NOTE	MZ	01/25/2023
##	DESCRIPTION	FL	MM/DD/YYYY

DATE 8/25/2021

W-6

CP&Y, INC.
TEXAS REGISTERED ENGINEERING FIRM
TBPE F-1741

STATE OF TEXAS
DAVID L. MAREK
#83327
REGISTERED PROFESSIONAL ENGINEER
4-14-2023

NO.	REVISION	BY	DATE

VERIFY SCALE 0 1"
BAR LENGTH EQUALS ONE INCH ON ORIGINAL DRAWING. VERIFY LENGTH ON THIS SHEET AND ADJUST SCALE ACCORDINGLY

CITY OF WACO
SOUTH 11TH STREET IMPROVEMENTS

CITY OF WACO
WATER DETAILS

DESIGN: DLM
DRAWN: CDG
REVIEW: DLM
CP&Y: CWAC2200923
CLIENT:

SHEET
C812

PRINTED BY: emcdougald DATE: 4/12/2023
FILE PATH: G:\Projects\CWAC2200923-11th and Mary\08_Plans_Drawings\20_Sheets\2200923-C80-DETAILS.dwg, C812

G:\Projects\CWAC2200923-11th and Mary\08_Plans_Drawings\20_Sheets\2200923-C80-DETAILS.dwg, C812, 4/12/2023 2:35:13 PM, 1:1

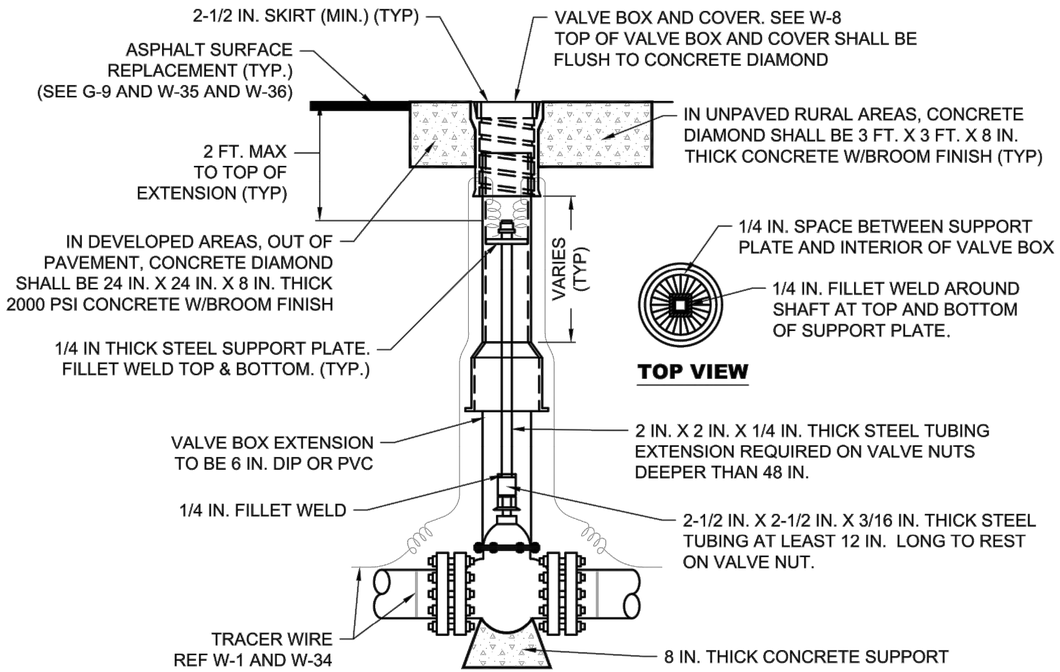

VALVE BOX EXTENSION DETAIL

NOTES:

1. STEM EXTENSION SHALL BE REQUIRED WHEN VALVE NUT BURY DEPTH EXCEEDS 48 IN.
2. ALL STEM EXTENSIONS SHALL BE CLIPPED TO THE VALVE NUT.
3. SUBGRADE WILL BE PLACED AND COMPACTED IN ACCORDANCE WITH SPECIFICATIONS.
4. STABILIZED BASE WILL BE PLACED TO GRADE IN ACCORDANCE WITH SPECIFICATIONS.
5. SOIL, SUBGRADE, AND STABILIZED BASE OVER VALVE BOX SHALL BE REMOVED AND THE VALVE BOX INSTALLED TO PROPER FINAL ELEVATION.
6. ANY EXCAVATED AREA BELOW THE SURFACE REPLACEMENT SHALL BE FILLED WITH 2000 PSI CONCRETE OR CONTROLLED LOW STRENGTH MATERIAL (CLSM). CARE SHALL BE EXERCISED IN THE CONCRETE OR CLSM PLACEMENT TO PREVENT ANY VOIDS BELOW OR AROUND THE VALVE BOX.
7. PLEASE REFER TO STANDARD DETAIL G-9 FOR ASPHALT SURFACE REPLACEMENT.
8. IN UNPAVED RURAL AREAS WITHIN THE RIGHT-OF-WAY, A 3 FT. X 3 FT. X 8 IN. THICK REINFORCED (4 - #4 EACH WAY, 3 IN. CLEAR SIDES AND BOTTOM) CONCRETE DIAMOND SHALL REPLACE THE ASPHALT SURFACE REPLACEMENT NOTED ABOVE. THE CONCRETE DIAMOND SHALL BE CENTERED ON THE VALVE BOX, HAVE A BROOM FINISH AND SHALL BE PLACED TO GRADE (NOTES: 3 - 7 AND NOTE 9 DO NOT APPLY). PLEASE REFER TO STANDARD DETAIL G-9 FOR CLASS E SURFACE REPLACEMENT.
9. IN DEVELOPED AREAS OUTSIDE OF THE PAVEMENT, AN 24 IN. X 24 IN. X 8 IN. THICK REINFORCED (2 - #4 EACH WAY, 3 IN. CLEAR SIDES AND BOTTOM) CONCRETE DIAMOND WILL REPLACE THE CLASS B SURFACE REPLACEMENT NOTED ABOVE. THE CONCRETE DIAMOND SHALL BE CENTERED ON THE VALVE BOX, HAVE A BROOM FINISH AND SHALL BE PLACED TO GRADE (NOTES: 4 - 8 DO NOT APPLY). PLEASE REFER TO STANDARD DETAILS G-9 FOR CLASS E SURFACE REPLACEMENT.
10. PRE-PACKAGED CONCRETE MIX NOT PERMITTED FOR USE IN CONCRETE DIAMOND.

WATER VALVE BOX EXTENSION INSTALLATION

(NO SCALE)

WACO ENGINEERING DIVISION

REVISIONS

NO.	COMMENTS	BY	DATE
2	REPLACE REF TO STD DETAIL WITH NOTE	MZ	01/25/2023
1	REVISE "SEE W-8A AND W-AB" TO "SEE W-8"	MZ	03/10/2022
##	DESCRIPTION	FL	MM/DD/YYYY

DATE 02/08/2022

W-7

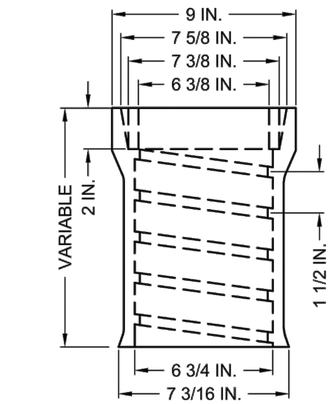

TOP SECTION

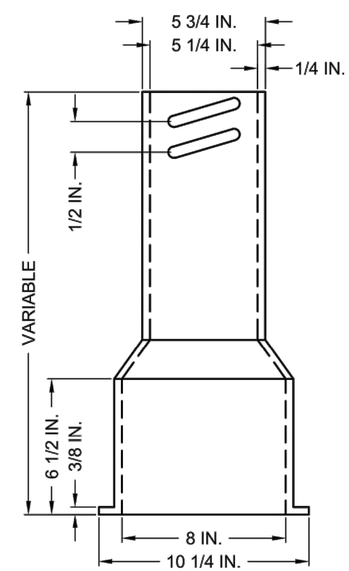

BOTTOM SECTION

NOTE:
TYLER/UNION 6850 SERIES 462-S OR 562-S CAST IRON TWO-PIECE VALVE BOX OR PRE-APPROVED EQUAL.

WATER VALVE BOX

(NO SCALE)

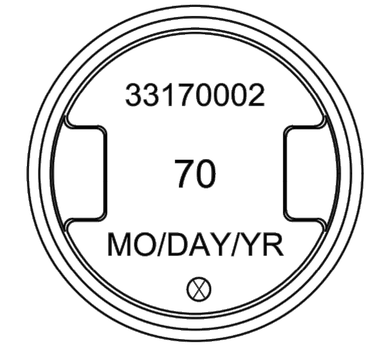

COVER BACK VIEW

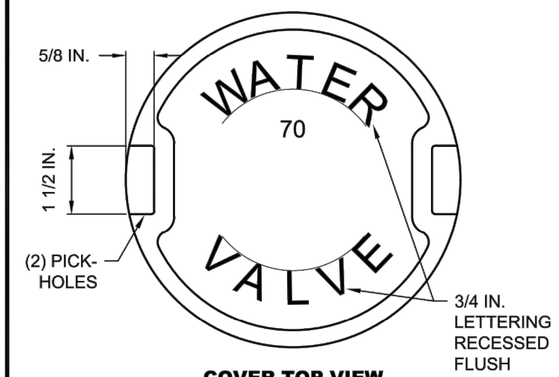

COVER TOP VIEW

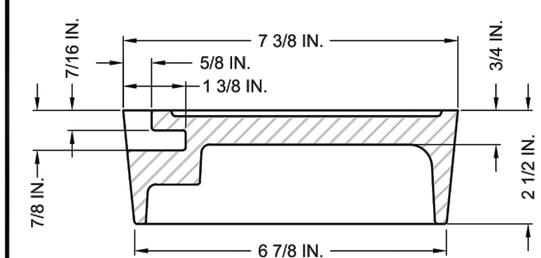

COVER SECTION

NOTE:
EAST JORDAN IRON WORKS, INC. PRODUCT #33170002 OR PRE-APPROVED EQUAL

WATER VALVE BOX COVER

(NO SCALE)

WACO ENGINEERING DIVISION

REVISIONS

NO.	COMMENTS	BY	DATE
##	DESCRIPTION	FL	MO/DY/YEAR

DATE 8/25/2021

W-8

CP&Y, INC.
TEXAS REGISTERED ENGINEERING FIRM TBPE F-1741

STATE OF TEXAS — DAVID L. MAREK #83327 — REGISTERED PROFESSIONAL ENGINEER — 4-14-2023

NO.	REVISION	BY	DATE

VERIFY SCALE 0 1"
BAR LENGTH EQUALS ONE INCH ON ORIGINAL DRAWING. VERIFY LENGTH ON THIS SHEET AND ADJUST SCALE ACCORDINGLY.

CITY OF WACO
SOUTH 11TH STREET IMPROVEMENTS

CITY OF WACO
WATER DETAILS

DESIGN: DLM
DRAWN: CDG
REVIEW: DLM
CP&Y: CWAC2200923
CLIENT:

SHEET C813

NOTES:

1. THE STANDARD METER BOX FOR 1-1/2 IN. METERS IS AN OLDCASTLE CHRISTY B65 SERIES METER BOX WITH DFW65C POLYMER LID WITH AMI HOLE OR PRE-APPROVED EQUAL.
2. METERS 2 IN. AND LARGER SHALL BE INSTALLED IN A CONCRETE VAULT.
3. SERVICE LINES SHALL BE ONE CONTINUOUS PIECE OF PIPE. JOINTS ARE ONLY ALLOWED AT THE CORPORATION STOP AND THE CURB STOP.
4. SWEATED, GALVANIZED, OR PVC JOINTS SHALL NOT BE ACCEPTED. NON-LEADED BRASS, COPPER TUBING WITH THREADED OR COMPRESSION COUPLINGS, OR POLY PIPE WITH STAINLESS STEEL INSERTS WILL BE ACCEPTED.
5. THE METER IS TO BE LOCATED IN A NON-TRAFFIC GREEN SPACE IN THE RIGHT OF WAY. ALL OTHER LOCATIONS MUST BE APPROVED BY THE CITY ENGINEER. WITH PRIOR APPROVAL FROM THE CITY, A METER MAY BE LOCATED IN AN AREA EXPOSED TO TRAFFIC. IN THIS CASE THE STANDARD BOX FOR METERS OF THESE SIZES IS AN OLDCASTLE CHRISTY N30 SERIES METER BOX WITH DFW1324C POLYMER LID WITH AMI HOLE OR PRE-APPROVED EQUAL.
6. ALL 1-1/2 IN. AND LARGER METERS SHALL BE SENSUS OMNI METERS WITH ITRON CONNECTORS.
7. CITY'S RESPONSIBILITY FOR LEAK REPAIR ENDS AT CONNECTION ON DOWNSTREAM SIDE OF THE METER UP TO AND INCLUDING THE METER BRASS.
8. MINIMUM COMMERCIAL SERVICE SIZE SHALL BE 2 IN.

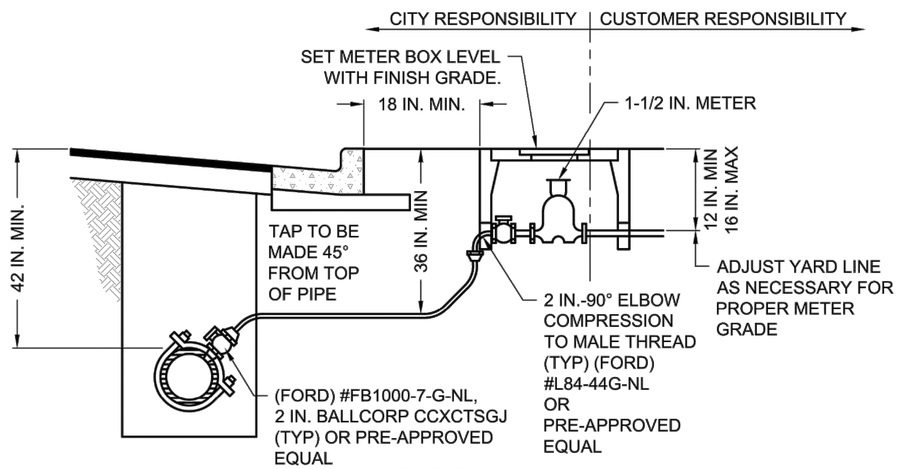

SECTION

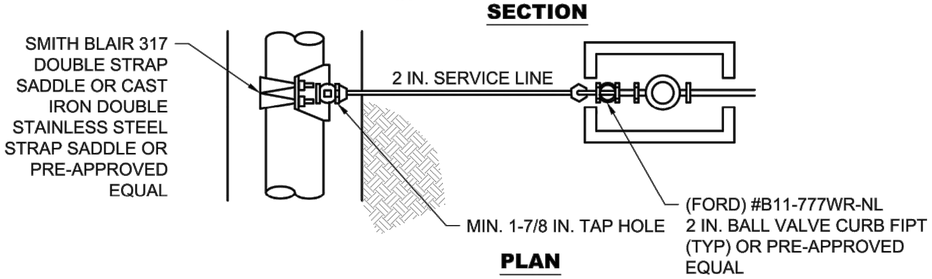

PLAN

TYPICAL COMMERCIAL OR LARGE RESIDENTIAL WATER METER SERVICE CONNECTION

(NO SCALE)

DISCLAIMER: THE USE OF THIS STANDARD IS GOVERNED BY THE "TEXAS ENGINEERING PRACTICE ACT". NO WARRANTY OF ANY KIND IS MADE BY THE CITY OF WACO FOR ANY PURPOSE WHATSOEVER. THE CITY OF WACO ASSUMES NO RESPONSIBILITY FOR THE CONVERSION OF THIS STANDARD TO OTHER FORMATS OR FOR INCORRECT RESULTS OR DAMAGES RESULTING FROM ITS USE.

WACO

ENGINEERING DIVISION

REVISIONS

NO.	COMMENTS	BY	DATE
1	REMOVE NOTE AND RENUMBER	MZ	01/25/2023
##	DESCRIPTION	FL	MM/DD/YYYY

DATE 8/25/2021

W-12

LID KEY	
AF	ANTI-FLOAT MATERIAL
1	BLACK COLOR
T	TOUCH READ HOLE
SMALL	BADGER/ITRON HOLE
<>	NO LID HOOK

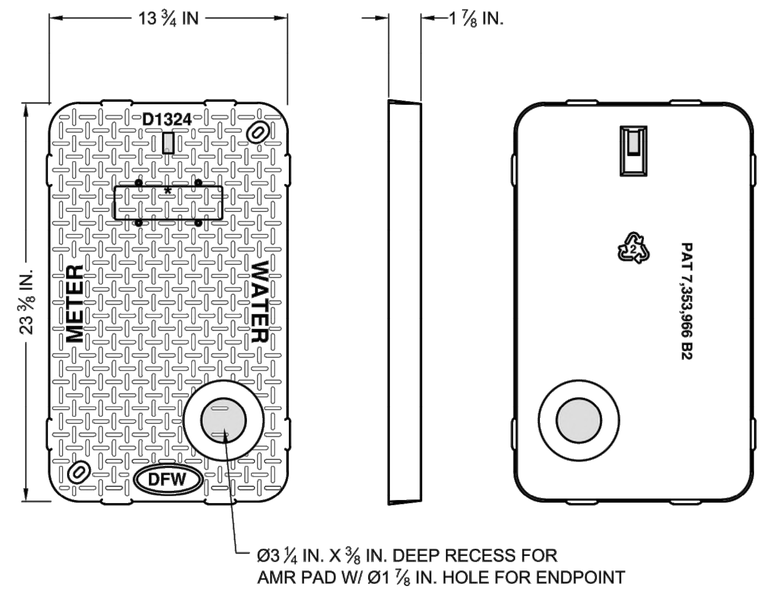

NOTES:

1. REFERENCE DFW PLASTICS, INC. DETAIL "DFW1324C".
2. DIMENSIONS ARE ±1/8 IN. UNLESS NOTED OTHERWISE.
3. LID MATERIAL IS ANTI-FLOAT.
4. LID TO BE USED FOR CONCRETE METER BOXES IN TRAFFIC AREAS.

CONCRETE WATER METER BOX LID DETAILS (DFW1324C)

(NO SCALE)

DISCLAIMER: THE USE OF THIS STANDARD IS GOVERNED BY THE "TEXAS ENGINEERING PRACTICE ACT". NO WARRANTY OF ANY KIND IS MADE BY THE CITY OF WACO FOR ANY PURPOSE WHATSOEVER. THE CITY OF WACO ASSUMES NO RESPONSIBILITY FOR THE CONVERSION OF THIS STANDARD TO OTHER FORMATS OR FOR INCORRECT RESULTS OR DAMAGES RESULTING FROM ITS USE.

WACO

ENGINEERING DIVISION

REVISIONS

NO.	COMMENTS	BY	DATE
##	DESCRIPTION	FL	MO/DY/YEAR

DATE 8/25/2021

W-16

CP&Y, INC.
TEXAS REGISTERED ENGINEERING FIRM TBPE F-1741

STATE OF TEXAS
DAVID L. MAREK #83327
REGISTERED PROFESSIONAL ENGINEER
4-14-2023

NO.	REVISION	BY	DATE

VERIFY SCALE 0 1"
BAR LENGTH EQUALS ONE INCH ON ORIGINAL DRAWING. VERIFY LENGTH ON THIS SHEET AND ADJUST SCALE ACCORDINGLY.

CITY OF WACO
SOUTH 11TH STREET IMPROVEMENTS

CITY OF WACO
WATER DETAILS

DESIGN: DLM
DRAWN: CDG
REVIEW: DLM
CP&Y: CWAC2200923
CLIENT:

SHEET
C814

PRINTED BY: emcdougald DATE: 4/12/2023
FILE PATH: G:\Projects\CWAC2200923-11th and Mary\08_Plans_Drawings\20_Sheets\2200923-C80-DETAILS.dwg, C814

G:\Projects\CWAC2200923-11th and Mary\08_Plans_Drawings\20_Sheets\2200923-C80-DETAILS.dwg, C814, 4/12/2023 1:12:18 PM, 1:1

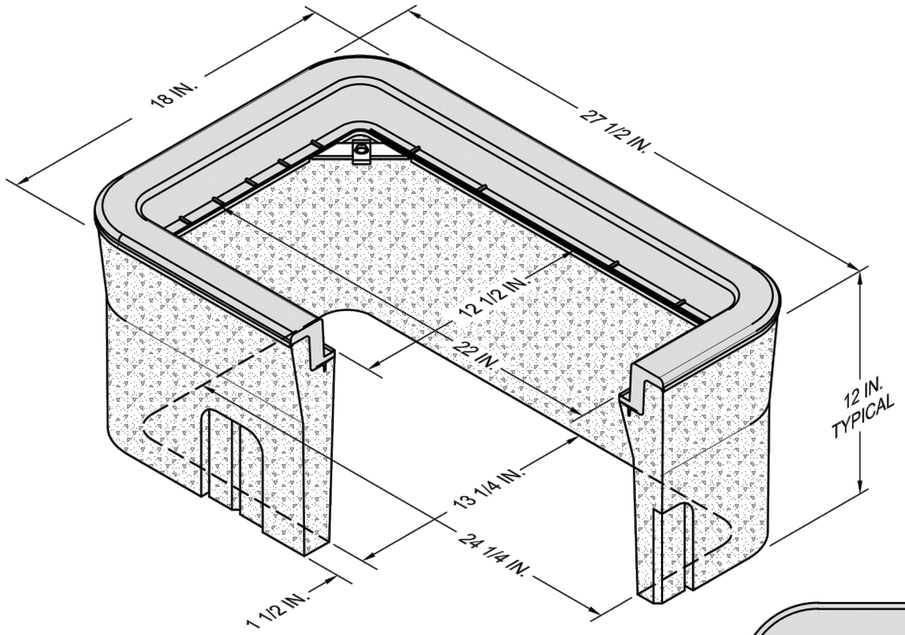

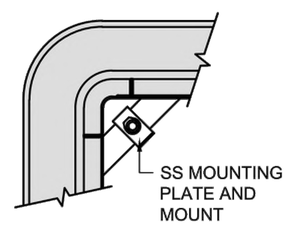

BOLT DOWN DETAIL

NOTES:

1. FOR USE IN TRAFFIC AREAS AND SIDEWALKS ONLY.
2. REFERENCE OLDCASTLE INFRASTURCTURE CHRISTY® N30
3. BODY:
   - MATERIAL: REINFORCED CONCRETE WITH COMPOSITE CAP.
   - MODEL: 18 IN. X 27 IN.
   - WEIGHT: 138 LBS.
   - WALL TYPE: STRAIGHT
   - MOUSEHOLES: 0-2
   - PERFORMANCE: ASTM C 857, WUC 3.6
4. EXTENSION:
   - MATERIAL: REINFORCED CONCRETE
   - DEPTH: 12 IN.
   - WEIGHT: 116 LBS.
5. WEIGHTS AND DIMENSIONS MAY VARY SLIGHTLY.
6. ACTUAL LOAD RATING IS DETERMINED BY THE BOX AND COVER COMBINATION.

CONCRETE WATER METER BOX FOR 3/4 IN. TO 1 IN. METERS (CHRISTY N30)

(NO SCALE)

DISCLAIMER: THE USE OF THIS STANDARD IS GOVERNED BY THE "TEXAS ENGINEERING PRACTICE ACT". NO WARRANTY OF ANY KIND IS MADE BY THE CITY OF WACO FOR ANY PURPOSE WHATSOEVER. THE CITY OF WACO ASSUMES NO RESPONSIBILITY FOR THE CONVERSION OF THIS STANDARD TO OTHER FORMATS OR FOR INCORRECT RESULTS OR DAMAGES RESULTING FROM ITS USE.

WACO

ENGINEERING DIVISION

REVISIONS

NO.	COMMENTS	BY	DATE
##	DESCRIPTION	FL	MO/DY/YEAR

DATE 8/25/2021

W-17

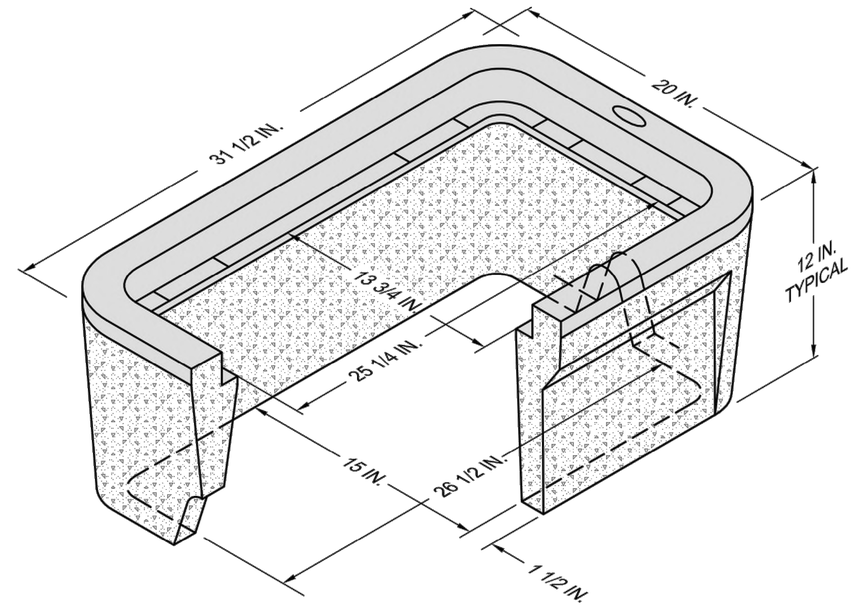

NOTES:

1. FOR USE IN TRAFFIC AREAS, SIDEWALKS AND GREENSPACE.
2. REFERENCE OLDCASTLE INFRASTURCTURE CHRISTY® B65
3. BODY:
   - MATERIAL: REINFORCED CONCRETE WITH COMPOSITE CAP.
   - MODEL: 20 IN. X 31 IN.
   - WEIGHT: 160 LBS.
   - WALL TYPE: STRAIGHT
   - MOUSEHOLES: 0
   - PERFORMANCE: ASTM C 857, WUC 3.6
4. EXTENSION:
   - MATERIAL: REINFORCED CONCRETE
   - DEPTH: 12 IN.
   - WEIGHT: 104 LBS.
5. WEIGHTS AND DIMENSIONS MAY VARY SLIGHTLY.
6. ACTUAL LOAD RATING IS DETERMINED BY THE BOX AND COVER COMBINATION.

CONCRETE WATER METER BOX FOR 1-1/2 IN. METER (CHRISTY B65)

(NO SCALE)

DISCLAIMER: THE USE OF THIS STANDARD IS GOVERNED BY THE "TEXAS ENGINEERING PRACTICE ACT". NO WARRANTY OF ANY KIND IS MADE BY THE CITY OF WACO FOR ANY PURPOSE WHATSOEVER. THE CITY OF WACO ASSUMES NO RESPONSIBILITY FOR THE CONVERSION OF THIS STANDARD TO OTHER FORMATS OR FOR INCORRECT RESULTS OR DAMAGES RESULTING FROM ITS USE.

WACO

ENGINEERING DIVISION

REVISIONS

NO.	COMMENTS	BY	DATE
##	DESCRIPTION	FL	MO/DY/YEAR

DATE 8/25/2021

W-18

CP&Y, INC.
TEXAS REGISTERED ENGINEERING FIRM
TBPE F-1741

STATE OF TEXAS
DAVID L. MAREK
#83327
REGISTERED
PROFESSIONAL ENGINEER
4-14-2023

NO.	REVISION	BY	DATE

VERIFY SCALE 0 1"
BAR LENGTH EQUALS ONE INCH ON ORIGINAL DRAWING. VERIFY LENGTH ON THIS SHEET AND ADJUST SCALE ACCORDINGLY

CITY OF WACO
SOUTH 11TH STREET IMPROVEMENTS

CITY OF WACO
WATER DETAILS

DESIGN: DLM
DRAWN: CDG
REVIEW: DLM
CP&Y: CWAC2200923
CLIENT:

SHEET
C815

PRINTED BY: emcdougald DATE: 4/12/2023
FILE PATH: G:\Projects\CWAC2200923-11th and Mary\08_Plans_Drawings\20_Sheets\2200923-C80-DETAILS.dwg, C815

G:\Projects\CWAC2200923-11th and Mary\08_Plans_Drawings\20_Sheets\2200923-C80-DETAILS.dwg, C815, 4/12/2023 1:12:19 PM, 1:1

STORMWATER POLLUTION PREVENTION
GENERAL NOTES

1. ALL CONSTRUCTION WORK WITHIN THE CITY OF WACO MUST COMPLY WITH THE TEXAS COMMISSION ON ENVIRONMENTAL QUALITY GENERAL PERMIT FOR STORMWATER DISCHARGES FROM CONSTRUCTION ACTIVITIES UNDER THE TEXAS POLLUTANT DISCHARGE ELIMINATION SYSTEM (TPDES) PROGRAM, AND CITY OF WACO ORDINANCES AND STANDARD SPECIFICATIONS FOR CONSTRUCTION (SECTION GP-3.6.D STORMWATER POLLUTION PREVENTION PLAN (EROSION CONTROL PLAN)).

2. ALL STORMWATER POLLUTION PREVENTION AND EROSION CONTROL PLANS MUST BE APPROVED BY THE WATERSHED PROTECTION COMPLIANCE TEAM PRIOR TO INSTALLATION OF PROTECTIVE MEASURES. THE INSTALLATION OF THE PROTECTIVE MEASURES MUST BE INSPECTED AND APPROVED BY CITY OF WACO INSPECTION STAFF PRIOR TO COMMENCING ANY OTHER CONSTRUCTION ACTIVITY. FAILURE OF COMPLIANCE WILL BY SUBJECT TO CITY OF WACO FEE SCHEDULE.

3. ALL MATERIALS USED FOR STORMWATER POLLUTION PREVENTION SHALL MEET THE MINIMUM DESIGN AND SPECIFICATION REQUIREMENTS AS REFERENCED FROM THE NORTH CENTRAL TEXAS COUNCIL OF GOVERNMENTS (NCTCOG) INTEGRATED STORMWATER MANAGEMENT (iSWM) DESIGN MANUAL FOR CONSTRUCTION. THE CONTRACTOR SHALL USE APPROPRIATE CONTROL DEVICES TO PROTECT AGAINST STORMWATER POLLUTION FROM CONSTRUCTION SITE ACTIVITY.

4. IN THE EVENT OF CONFLICT BETWEEN THE SPECIFIED REQUIREMENTS AND STORMWATER POLLUTION CONTROL LAWS, RULES, OR REGULATIONS, OR OTHER LOCAL, STATE, OR FEDERAL AGENCIES, THE MORE RESTRICTIVE LAWS, RULES OR REGULATIONS SHALL APPLY.

5. ALL PROTECTIVE MEASURES SHALL BE INSPECTED BY THE PRIMARY OPERATOR REGULARLY (AT LEAST AS OFTEN AS REQUIRED BY THE TPDES CONSTRUCTION GENERAL PERMIT).

6. ALL POLLUTION PREVENTION CONTROL STRUCTURES AND PROCEDURES MUST BE MAINTAINED IN FULL WORKING ORDER AT ALL TIMES DURING CONSTRUCTION. THIS SHALL INCLUDE ANY NECESSARY REPAIR OR REPLACEMENT OF ITEMS, WHICH HAVE BECOME DAMAGED OR INEFFECTIVE. REMOVE SEDIMENT AND OTHER POLLUTANTS, WHICH ACCUMULATE IN POLLUTION CONTROL DEVICES AS NECESSARY TO MAINTAIN THE INTENDED DESIGN EFFICIENCY FOR THE POLLUTION PREVENTION MEASURE.

7. UPON COMPLETION OF CONSTRUCTION AND ACHIEVEMENT OF FINAL STABILIZATION, PROPERLY REMOVE THE TEMPORARY POLLUTANT CONTROL STRUCTURES AND COMPLETE THE AREA AS INDICATED. POLLUTION CONTROL DEVICES MADE OF ORGANIC MATERIALS DESIGNED TO DEGRADE NATURALLY IN PLACE WILL NOT REQUIRE REMOVAL, UNLESS SPECIFICALLY REQUIRED BY THE OWNER, ENGINEER, OR OWNER'S REPRESENTATIVE.

8. STANDARD DETAILS FOR SOME PROTECTIVE MEASURES HAVE BEEN INCLUDED. PLEASE REFER TO THE iSWM DESIGN MANUAL FOR OTHER PROTECTIVE MEASURES AS NEEDED.

WACO | ENGINEERING DIVISION

REVISIONS

NO.	COMMENTS	BY	DATE
##	DESCRIPTION	FL	MM/DD/YYYY

DATE 05/02/2022

WP-1

DESCRIPTION:
INLET PROTECTION CONSISTS OF A VARIETY OF METHODS TO INTERCEPT SEDIMENT AT LOW POINT INLETS THROUGH THE USE OF DEPRESSED GRADING, FILTER STONE, FILTER FABRIC, INLET INSERTS, AND OTHER MATERIALS. THE PROTECTION DEVICES ARE PLACED AROUND OR ACROSS THE INLET OPENINGS TO PROVIDE LOCALIZED DETENTION OR FILTRATION OF SEDIMENT AND FLOATABLE MATERIALS IN STORMWATER. PROTECTION DEVICES MAY BE ASSEMBLED ONSITE OR PURCHASED AS MANUFACTURED ASSEMBLIES. CURB INLET PROTECTION SHALL E IN ACCORDANCE WITH WP-7B.

GENERAL NOTES:
1. DRAINAGE PATTERNS SHALL BE EVALUATED TO ENSURE INLET PROTECTION WILL NOT DIVERT FLOW OR FLOOD THE ROADWAY OR ADJACENT PROPERTIES AND STRUCTURES.
2. INLET PROTECTION MEASURES OR DEVICES THAT COMPLETELY BLOCK THE INLET ARE PROHIBITED. THEY MUST ALSO INCLUDE A BYPASS CAPABILITY IN CASE THE PROTECTION MEASURES ARE CLOGGED.
3. INLET PROTECTION MUST BE DESIGNED TO PASS THE CONVEYANCE STORM (25-YEAR, 24-HOUR) WITHOUT CREATING A ROAD HAZARD OR DAMAGING ADJACENT PROPERTY. THIS MAY BE ACCOMPLISHED BY ANY OF THE FOLLOWING MEASURES:
   A. AN OVERFLOW WEIR ON THE PROTECTION MEASURE.
   B. AN EXISTING POSITIVE OVERFLOW SWALE ON THE INLET.
   C. SUFFICIENT STORAGE VOLUME AROUND THE INLET TO HOLD THE PONDED WATER UNTIL IT CAN ALL FILTER INTO THE INLET.
   D. OTHER ENGINEERED METHOD.
4. POSITIVE OVERFLOW DRAINAGE IS CRITICAL IN THE DESIGN OF INLET PROTECTION. IF OVERFLOW IS NOT PROVIDED FOR AT THE INLET, TEMPORARY MEANS SHALL BE PROVIDED TO ROUTE EXCESS FLOWS THROUGH ESTABLISHED SWALES, STREETS, OR OTHER WATERCOURSES TO MINIMIZE DAMAGE DUE TO FLOODING.
5. FILTER FABRIC AND WIRE MESH USED FOR INLET PROTECTION SHALL MEET THE MATERIAL REQUIREMENTS SPECIFIED IN CITY OF WACO STANDARD SPECIFICATIONS FOR CONSTRUCTION.
6. BLOCK AND GRAVEL (CRUSHED STONE OR RECYCLED CONCRETE) PROTECTION IS USED WHEN FLOWS EXCEED 0.5 CUBIC FEET PER SECOND AND IT IS NECESSARY TO ALLOW FOR OVERTOPPING TO PREVENT FLOODING.
7. BAGS USED TO SECURE INLET PROTECTION DEVICES ON TOP OF CURB INLET SHALL BE FILLED WITH AGGREGATE, FILTER STONE, OR CRUSHED ROCK THAT IS LESS LIKELY THAN SAND TO BE WASHED INTO AN INLET IF THE BAG IS BROKEN. FILLED BAGS SHALL BE 24 TO 30 INCHES LONG, 16 TO 18 INCHES WIDE, AND 6 TO 8 INCHES THICK. BAGS SHALL BE POLYPROPYLENE, POLYETHYLENE, OR POLYAMIDE WOVEN FABRIC WITH A MINIMUM UNIT WEIGHT OF 4 OUNCES PER SQUARE YARD AND MEET THE FOLLOWING CRITERIA:
8. GREATER THAN 300 PSI MULLEN BURST STRENGTH USING ASTM D3786 STANDARD TEST METHOD FOR HYDRAULIC BURSTING STRENGTH OF TEXTILE FABRICS-DIAPHRAGM BURSTING STRENGTH TESTER METHOD.
9. GREATER THAN 70 PERCENT UV STABILITY USING ASTM D4355 STANDARD TEST METHOD FOR DETERIORATION OF GEOTEXTILES BY EXPOSURE TO LIGHT, MOISTURE, AND HEAT IN A XENON ARC TYPE APPARATUS.
10. INLET PROTECTION SHALL BE MAINTAINED AS FOLLOWS:
11. INSPECT EVERY 14 DAYS
12. CHECK FOR AND REMOVE BLOCKAGE OF INLET AFTER EVERY STORM EVENT WITHIN 24 HOURS
13. REMOVE SEDIMENT BEFORE IT REACHES HALF THE DESIGN HEIGHT OR VOLUME OF THE INLET PROTECTION, MORE FREQUENTLY FOR CURB INLETS
14. REPAIR OR REPLACE DAMAGED MATERIALS
15. CLEAN OR REPLACE FILTER STONE WHEN CLOGGED WITH SEDIMENT
16. FOR NON-CITY PROJECTS, REMOVAL OR TRANSFER (SEE FORM **WSP-0001**) OF ALL INLET PROTECTION AT SUBMISSION OF NOTICE OF TERMINATION.
17. PLEASE REFER TO THE CITY OF WACO STANDARD SPECIFICATIONS FOR CONSTRUCTION, SECTION 1.10, PART 2, A 4 AND PART 3, B 3 FOR INLET PROTECTION MATERIAL AND INSTALLATION SPECIFICATIONS.

INLET PROTECTION GENERAL NOTES

WACO | ENGINEERING DIVISION

REVISIONS

NO.	COMMENTS	BY	DATE
##	DESCRIPTION	FL	MM/DD/YYYY

DATE 05/02/2022

WP-7A

CP&Y, INC.
TEXAS REGISTERED ENGINEERING FIRM
TBPE F-1741

STATE OF TEXAS
DAVID L. MAREK
#83327
REGISTERED
PROFESSIONAL ENGINEER
4-14-2023

NO.	REVISION	BY	DATE

VERIFY SCALE 0 1"
BAR LENGTH EQUALS ONE INCH ON ORIGINAL DRAWING. VERIFY LENGTH ON THIS SHEET AND ADJUST SCALE ACCORDINGLY

CITY OF WACO
SOUTH 11TH STREET IMPROVEMENTS

CITY OF WACO
WATERSHED PROTECTION DETAILS

DESIGN: DLM
DRAWN: CDG
REVIEW: DLM
CP&Y: CWAC2200923
CLIENT:

SHEET
C816

PRINTED BY: emcdougald DATE: 4/12/2023
FILE PATH: G:\Projects\CWAC2200923-11th and Mary\08_Plans_Drawings\20_Sheets\2200923-C80-DETAILS.dwg, C816

G:\Projects\CWAC2200923-11th and Mary\08_Plans_Drawings\20_Sheets\2200923-C80-DETAILS.dwg, C816, 4/12/2023 1:12:21 PM, 1:1

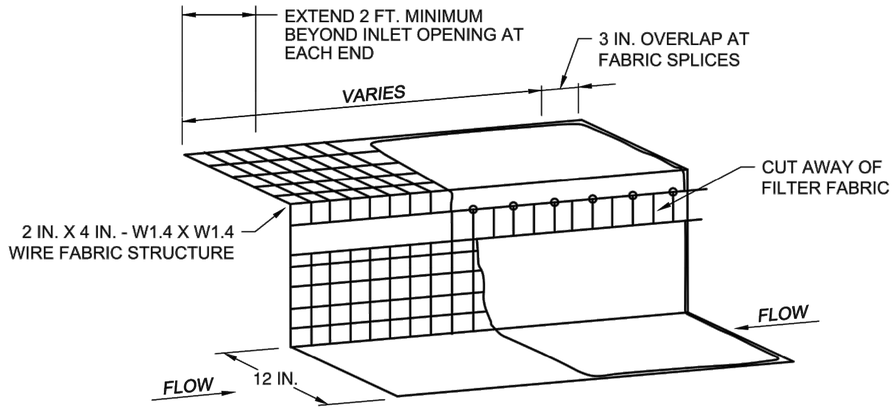

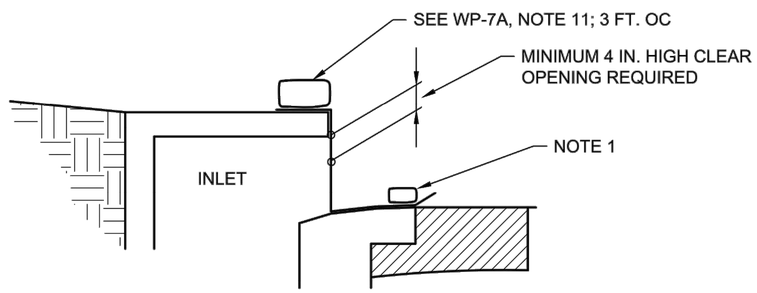

NOTES:

1. A 1 IN. X 4 IN. BOARD SECURED WITH ¼ IN. OR ⅜ IN. Ø CONCRETE SCREWS OF SUFFICIENT LENGTH. THE SCREWS SHALL BE ATTACHED TO THE GUTTER BY DRILLING AN APPROPRIATE PILOT HOLE WITH A CONCRETE BIT AND INSERTING PLASTIC FASTENERS. THE TOP OF THE SCREW SHALL BE RECESSED BELOW THE TOP OF THE BOARD. THE SCREWS SHALL BE PLACED ON 3 FT. O.C. UPON REMOVAL, EITHER LEAVE THE PLASTIC FASTENERS IN PLACE, OR REMOVE THE PLASTIC FASTENERS, CLEAN ANY DIRT/DEBRIS FROM THE SCREW LOCATIONS, APPLY CHEMICAL SANDING AGENT AND APPLY NON-SHRINK GROUT FLUSH WITH THE SURFACE OF THE GUTTER.
2. A SECTION OF FILTER FABRIC SHALL BE REMOVED AS SHOWN ON THIS DETAIL OR AS DIRECTED BY THE ENGINEER OR DESIGNATED REPRESENTATIVE. FABRIC MUST BE SECURED TO WIRE BACKING WITH CLIPS OR HOG RINGS AT THIS LOCATION.
3. DAILY INSPECTION SHALL BE MADE BY THE CONTRACTOR AND SILT ACCUMULATION MUST BE REMOVED WHEN DEPTH REACHES 2 INCHES.
4. CONTRACTOR SHALL MONITOR THE PERFORMANCE OF INLET PROTECTION DURING EACH RAINFALL EVENT AND IMMEDIATELY REMOVE THE INLET PROTECTIONS IF THE STORM-WATER BEGINS TO OVER-TOP THE CURB.
5. INLET PROTECTIONS SHALL BE REMOVED AS SOON AS THE SOURCE OF SEDIMENT IS STABILIZED.

FILTER WEIR CURB INLET PROTECTION

(NO SCALE)

WACO

ENGINEERING DIVISION

REVISIONS

NO.	COMMENTS	BY	DATE
##	DESCRIPTION	FL	MM/DD/YYYY

DATE 05/02/2022

WP-7B

CP&Y, INC.
TEXAS REGISTERED ENGINEERING FIRM
TBPE F-1741

STATE OF TEXAS
DAVID L. MAREK
#83327
REGISTERED
PROFESSIONAL ENGINEER
4-14-2023

NO.	REVISION	BY	DATE

VERIFY SCALE 0 1"
BAR LENGTH EQUALS ONE INCH ON ORIGINAL DRAWING. VERIFY LENGTH ON THIS SHEET AND ADJUST SCALE ACCORDINGLY.

CITY OF WACO
SOUTH 11TH STREET IMPROVEMENTS

CITY OF WACO
WATERSHED PROTECTION DETAILS

DESIGN: DLM
DRAWN: CDG
REVIEW: DLM
CP&Y: CWAC2200923
CLIENT:

SHEET
C817

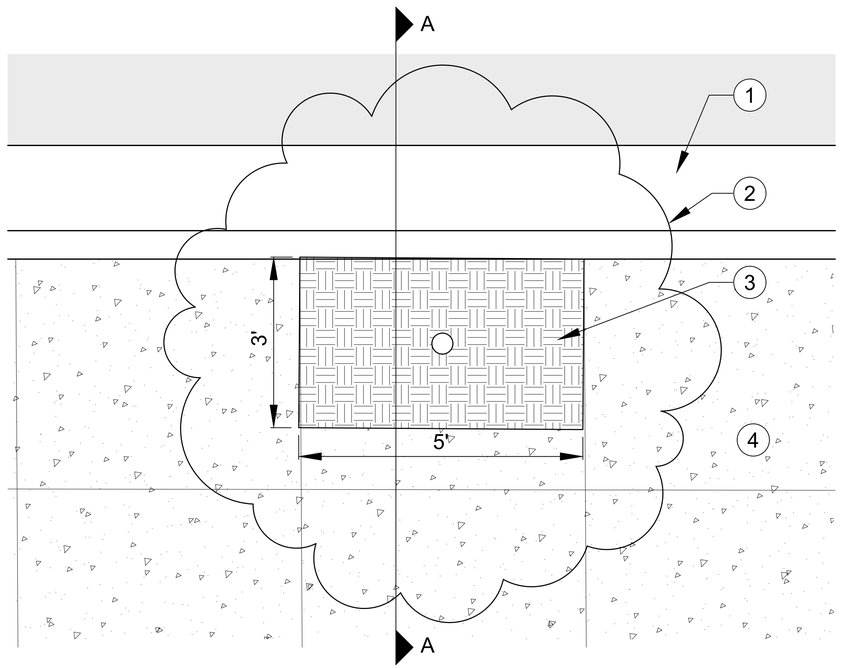

PLAN

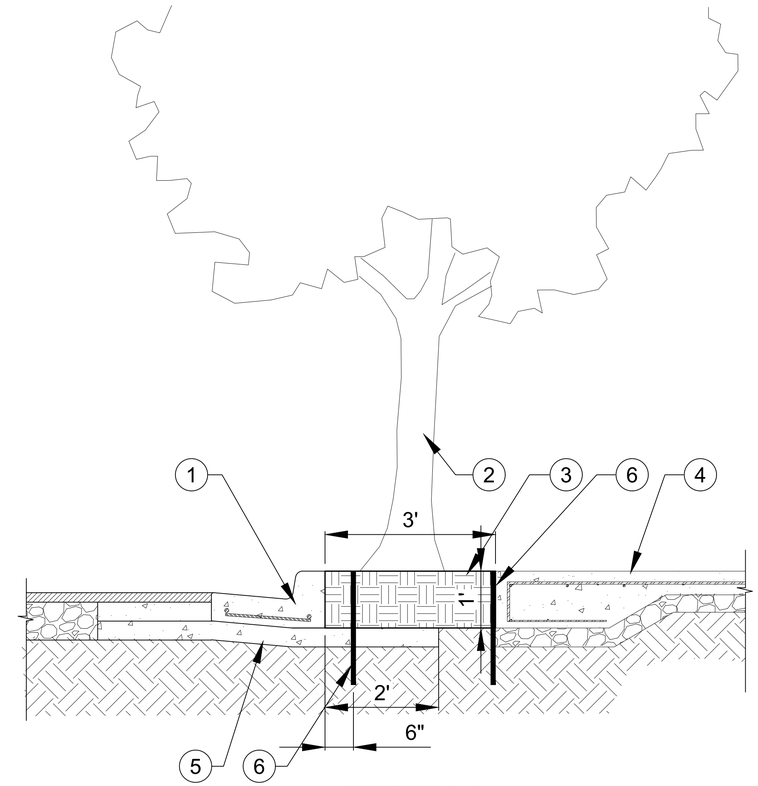

SECTION A-A

1. STANDARD CURB & GUTTER
2. PROPOSED TREE
3. CYPRESS MULCH. MIN 12" DEPTH
4. REINFORCED CONCRETE FLATWORK
5. BASE & SUBGRADE PER CITY OF WACO DETAIL ST-20. AT TREE WELL, CONTRACTOR TO NOT EXTEND CEMENT TREATED BASE BEYOND BACK OF CURB
6. TREE ROOT BARRIER MATERIAL SHALL BE PLACED 6" BEHIND BACK OF CURB AND AT EDGE OF SIDEWALK UNLESS OTHERWISE NOTED ON PLANS

1 TREE WELL DETAIL

SCALE : 3/8" = 1'-0"

CP&Y, INC.
TEXAS REGISTERED ENGINEERING FIRM
TBPE F-1741

STATE OF TEXAS
DAVID L. MAREK
#83327
REGISTERED
PROFESSIONAL ENGINEER
4-14-2023

NO.	REVISION	BY	DATE

VERIFY SCALE 0 1"
BAR LENGTH EQUALS ONE INCH ON ORIGINAL DRAWING. VERIFY LENGTH ON THIS SHEET AND ADJUST SCALE ACCORDINGLY

CITY OF WACO
SOUTH 11TH STREET IMPROVEMENTS

SIDEWALK DETAILS

DESIGN: DLM
DRAWN: CDG
REVIEW: DLM
CP&Y: CWAC2200923
CLIENT:

SHEET
C818

PRINTED BY: emcdougald DATE: 4/12/2023
FILE PATH: G:\Projects\CWAC2200923-11th and Mary\08_Plans_Drawings\20_Sheets\2200923-C80-DETAILS.dwg, C818

G:\Projects\CWAC2200923-11th and Mary\08_Plans_Drawings\20_Sheets\2200923-C80-DETAILS.dwg, C818, 4/12/2023 1:12:24 PM, 1:1

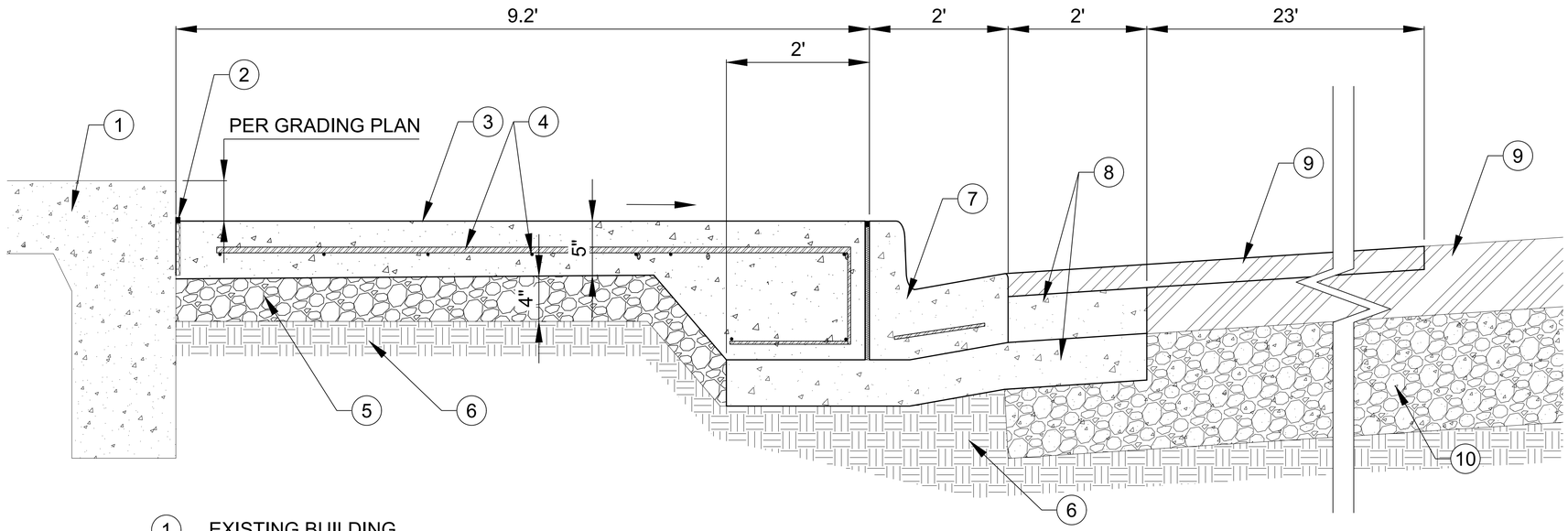

1. EXISTING BUILDING
2. ISOLATION JOINT
3. CONCRETE: TxDOT 421, CLASS 'A', SMOOTH BROOM FINISH
4. REINFORCEMENT: TxDOT 440, #4 @ 18" O.C.E.W., F_Y = 60,000 PSI
5. 4 INCH BASE. TYPE "A" MATERIAL PER STANDARD SPECIFICATIONS FOR CONSTRUCTION SECTION 4.2 EXCAVATION AND BACKFILL PART 2: PRODUCT A. MATERIALS 3. TRENCH BACKFILL A & SPECIAL SPECIFICATION SP4.2-003. TYPE 'A' MATERIAL OR RECYCLED CRUSHED CONCRETE (TxDOT STANDARD SPECIFICATIONS FOR CONSTRUCTION ITEM 247 FLEXIBLE BASE TYPE D GRADE 1-2, EXCLUDING TYPE A MATERIAL, WITH MINIMUM P.I. OF FOUR) MECHANICALLY COMPACTED TO 95% OF THE MAXIMUM DRY DENSITY (TEX-113-E). DEFINED AS "CURB BACKFILL" IN SELECT DETAILS.
6. COMPACT EXISTING SUBGRADE TO A MINIMUM OF 95% OF ASTM D698 MAX DRY DENSITY AT A MOISTURE CONTENT OF 0% TO +3% OF OPTIMUM MOISTURE CONTENT.
7. REINFORCED CONCRETE CURB & GUTTER
8. CONCRETE: 2,000 PSI
9. PAVING IMPROVEMENTS. SEE SITE PLAN / CROSS SECTIONS
10. EXISTING BASE TO REMAIN

NOTE:

PER GRADING PLAN, 1.5% MAX AS FORMED

1 SIDEWALK SECTION A

HORIZ SCALE : 1/2" = 1'-0" VERT SCALE: 1" = 1'-0"

CP&Y, INC.
TEXAS REGISTERED ENGINEERING FIRM
TBPE F-1741

STATE OF TEXAS
DAVID L. MAREK
#83327
REGISTERED
PROFESSIONAL ENGINEER
4-14-2023

NO.	REVISION	BY	DATE

VERIFY SCALE 0 1"
BAR LENGTH EQUALS ONE INCH ON ORIGINAL DRAWING. VERIFY LENGTH ON THIS SHEET AND ADJUST SCALE ACCORDINGLY

CITY OF WACO
SOUTH 11TH STREET IMPROVEMENTS

SIDEWALK DETAILS

DESIGN: DLM
DRAWN: CDG
REVIEW: DLM
CP&Y: CWAC2200923
CLIENT:

SHEET
C819

PRINTED BY: emcdougald DATE: 4/12/2023
FILE PATH: G:\Projects\CWAC2200923-11th and Mary\08_Plans_Drawings\20_Sheets\2200923-C8b-DETAILS.dwg, C819

G:\Projects\CWAC2200923-11th and Mary\08_Plans_Drawings\20_Sheets\2200923-C8b-DETAILS.dwg, C819, 4/12/2023 1:12:26 PM, 1:1

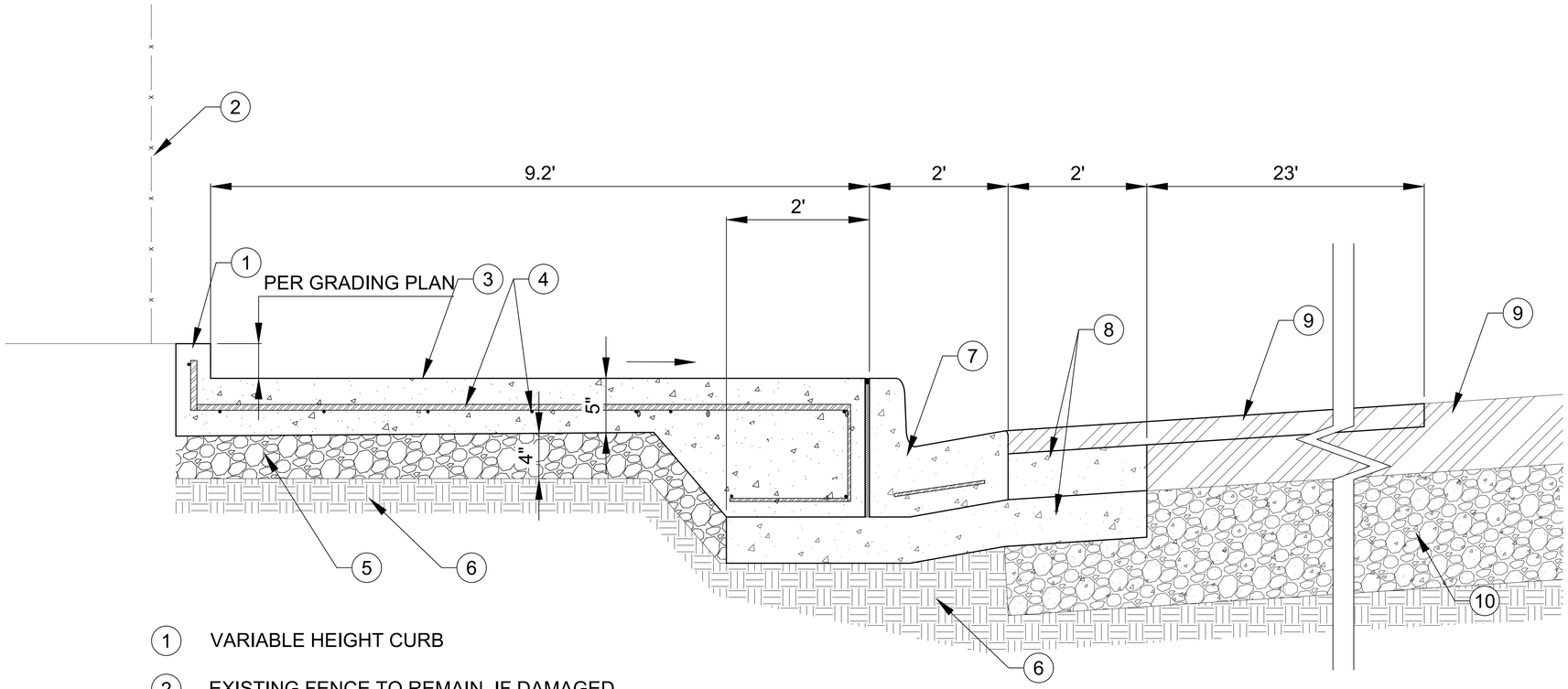

1 VARIABLE HEIGHT CURB

2 EXISTING FENCE TO REMAIN. IF DAMAGED, CONTRACTOR TO REPLACE AT NO ADDITIONAL COST TO OWNER

3 CONCRETE: TxDOT 421, CLASS 'A', SMOOTH BROOM FINISH

4 REINFORCEMENT: TxDOT 440, #4 @ 18" O.C.E.W., F_Y = 60,000 PSI

5 4 INCH BASE. TYPE "A" MATERIAL PER STANDARD SPECIFICATIONS FOR CONSTRUCTION SECTION 4.2 EXCAVATION AND BACKFILL PART 2: PRODUCT A. MATERIALS 3. TRENCH BACKFILL A & SPECIAL SPECIFICATION SP4.2-003. TYPE 'A' MATERIAL OR RECYCLED CRUSHED CONCRETE (TXDOT STANDARD SPECIFICATIONS FOR CONSTRUCTION ITEM 247 FLEXIBLE BASE TYPE D GRADE 1-2, EXCLUDING TYPE A MATERIAL, WITH MINIMUM P.I. OF FOUR) MECHANICALLY COMPACTED TO 95% OF THE MAXIMUM DRY DENSITY (TEX-113-E). DEFINED AS "CURB BACKFILL" IN SELECT DETAILS.

6 COMPACT EXISTING SUBGRADE TO A MINIMUM OF 95% OF ASTM D698 MAX DRY DENSITY AT A MOISTURE CONTENT OF 0% TO +3% OF OPTIMUM MOISTURE CONTENT.

7 REINFORCED CONCRETE CURB & GUTTER

8 CONCRETE: 2,000 PSI

9 PAVING IMPROVEMENTS. SEE SITE PLAN / CROSS SECTIONS

10 EXISTING BASE TO REMAIN

NOTE:

PER GRADING PLAN, 1.5% MAX AS FORMED

1 SIDEWALK SECTION B

SCALE : 1/2" = 1'-0"

CP&Y, INC.
TEXAS REGISTERED ENGINEERING FIRM
TBPE F-1741

STATE OF TEXAS
DAVID L. MAREK
#83327
REGISTERED
PROFESSIONAL ENGINEER
4-14-2023

NO.	REVISION	BY	DATE

VERIFY SCALE 0 1"
BAR LENGTH EQUALS ONE INCH ON ORIGINAL DRAWING. VERIFY LENGTH ON THIS SHEET AND ADJUST SCALE ACCORDINGLY

CITY OF WACO
SOUTH 11TH STREET IMPROVEMENTS

SIDEWALK DETAILS

DESIGN: DLM
DRAWN: CDG
REVIEW: DLM
CP&Y: CWAC2200923
CLIENT:

SHEET
C820

PRINTED BY: emcdougald DATE: 4/12/2023
FILE PATH: G:\Projects\CWAC2200923-11th and Mary\08_Plans_Drawings\20_Sheets\2200923-C80-DETAILS.dwg, C820

G:\Projects\CWAC2200923-11th and Mary\08_Plans_Drawings\20_Sheets\2200923-C80-DETAILS.dwg, C820, 4/12/2023 1:12:27 PM, 1:1

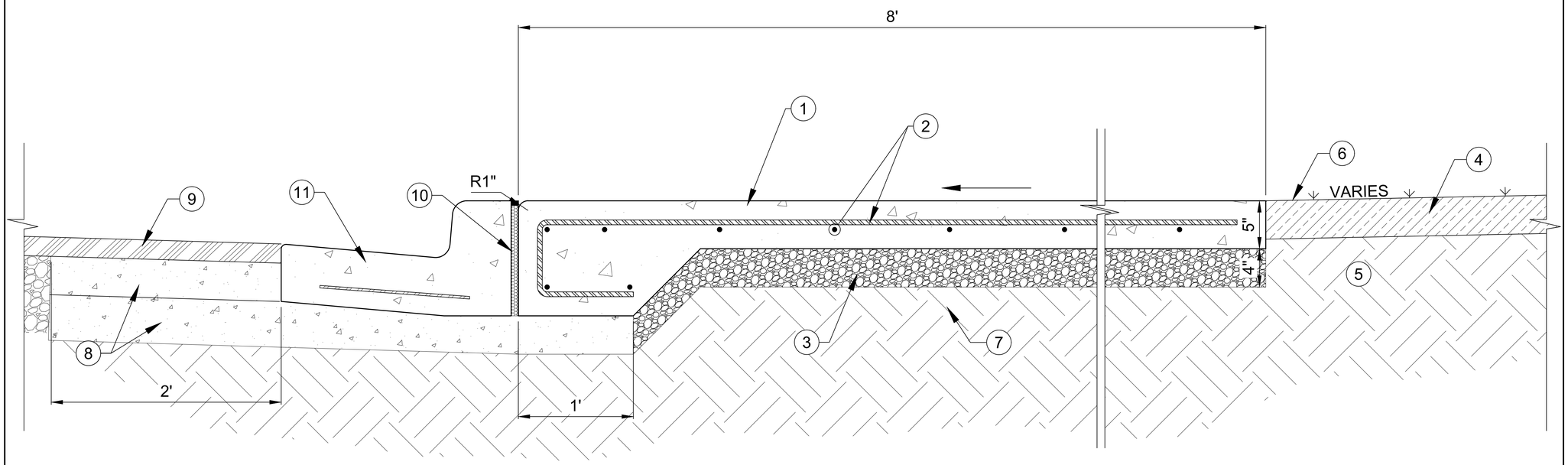

1. CONCRETE: TxDOT 421, CLASS 'A', SMOOTH BROOM FINISH
2. REINFORCEMENT: TxDOT 440, #4 @ 18" O.C.E.W. F_Y=60,000 PSI
3. 4 INCH BASE. TYPE "A" MATERIAL PER STANDARD SPECIFICATIONS FOR CONSTRUCTION SECTION 4.2 EXCAVATION AND BACKFILL PART 2: PRODUCT A. MATERIALS 3. TRENCH BACKFILL A & SPECIAL SPECIFICATION SP4.2-003. TYPE 'A' MATERIAL OR RECYCLED CRUSHED CONCRETE (TXDOT STANDARD SPECIFICATIONS FOR CONSTRUCTION ITEM 247 FLEXIBLE BASE TYPE D GRADE 1-2, EXCLUDING TYPE A MATERIAL, WITH MINIMUM P.I. OF FOUR) MECHANICALLY COMPACTED TO 95% OF THE MAXIMUM DRY DENSITY (TEX-113-E). DEFINED AS "CURB BACKFILL" IN SELECT DETAILS.
4. 4" RECLAIMED OR IMPORTED TOPSOIL
5. SELECT FILL AS NEEDED
6. SOLID BLOCK SOD
7. COMPACT EXISTING SUBGRADE TO A MINIMUM 95% OF ASTM D698 MAX DRY DENSITY WITHIN 0% TO +3% OPTIMUM MOISTURE CONTENT
8. CONCRETE: 2,000 PSI
9. HOT MIX ASPHALTIC CONCRETE: TxDOT ITEM 340, TYPE 'C'. THICKNESS: 2"
10. ISOLATION JOINT
11. REINFORCED CONCRETE CURB & GUTTER

NOTE:

1. SLOPE PER GRADING PLAN, 1.5% MAX AS FORMED

1 SIDEWALK SECTION C

SCALE : NTS

CP&Y, INC.
TEXAS REGISTERED ENGINEERING FIRM
TBPE F-1741

STATE OF TEXAS
DAVID L. MAREK
#83327
REGISTERED
PROFESSIONAL ENGINEER
4-14-2023

NO.	REVISION	BY	DATE

VERIFY SCALE 0 1"
BAR LENGTH EQUALS ONE INCH ON ORIGINAL DRAWING. VERIFY LENGTH ON THIS SHEET AND ADJUST SCALE ACCORDINGLY

CITY OF WACO
SOUTH 11TH STREET IMPROVEMENTS

SIDEWALK DETAILS

DESIGN: DLM
DRAWN: ECM
REVIEW: DLM
CP&Y: CWAC2200923
CLIENT:

SHEET
C821

PRINTED BY: emcdougald DATE: 4/12/2023
FILE PATH: G:\Projects\CWAC2200923-11th and Mary\08_Plans_Drawings\20_Sheets\2200923-C80-DETAILS.dwg, C821

G:\Projects\CWAC2200923-11th and Mary\08_Plans_Drawings\20_Sheets\2200923-C80-DETAILS.dwg, C821, 4/14/2023 2:58:59 PM, 1:1

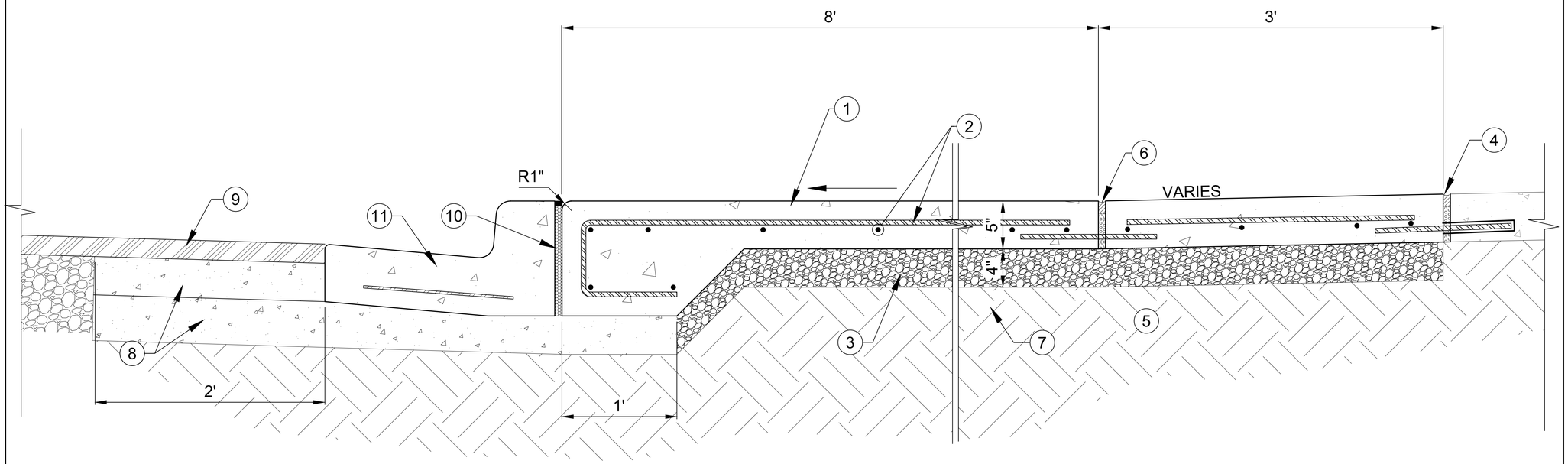

1. CONCRETE: TxDOT 421, CLASS 'A', SMOOTH BROOM FINISH
2. REINFORCEMENT: TxDOT 440, #4 @ 18" O.C.E.W. F_Y=60,000 PSI
3. 4 INCH BASE. TYPE "A" MATERIAL PER STANDARD SPECIFICATIONS FOR CONSTRUCTION SECTION 4.2 EXCAVATION AND BACKFILL PART 2: PRODUCT A. MATERIALS 3. TRENCH BACKFILL A & SPECIAL SPECIFICATION SP4.2-003. TYPE 'A' MATERIAL OR RECYCLED CRUSHED CONCRETE (TXDOT STANDARD SPECIFICATIONS FOR CONSTRUCTION ITEM 247 FLEXIBLE BASE TYPE D GRADE 1-2, EXCLUDING TYPE A MATERIAL, WITH MINIMUM P.I. OF FOUR) MECHANICALLY COMPACTED TO 95% OF THE MAXIMUM DRY DENSITY (TEX-113-E). DEFINED AS "CURB BACKFILL" IN SELECT DETAILS.
4. CONNECT TO EXISTING CONCRETE FLATWORK
5. SELECT FILL AS NEEDED
6. EXPANSION JOINT, REINFORCEMENT, TxDOT 440, #5 BAR @ 18" O.C. F_Y=60,000 PSI, LENGTH = 24"
7. COMPACT EXISTING SUBGRADE TO A MINIMUM 95% OF ASTM D698 MAX DRY DENSITY WITHIN 0% TO +3% OPTIMUM MOISTURE CONTENT
8. CONCRETE: 2,000 PSI
9. HOT MIX ASPHALTIC CONCRETE: TxDOT ITEM 340, TYPE 'C'. THICKNESS: 2"
10. ISOLATION JOINT
11. REINFORCED CONCRETE CURB & GUTTER

NOTE:

1. SLOPE PER GRADING PLAN, 1.5% MAX AS FORMED

1 SIDEWALK SECTION D

SCALE : NTS

CP&Y, INC.
TEXAS REGISTERED ENGINEERING FIRM
TBPE F-1741

STATE OF TEXAS
DAVID L. MAREK
#83327
REGISTERED
PROFESSIONAL ENGINEER
4-14-2023

NO.	REVISION	BY	DATE

VERIFY SCALE 0 1"
BAR LENGTH EQUALS ONE INCH ON ORIGINAL DRAWING. VERIFY LENGTH ON THIS SHEET AND ADJUST SCALE ACCORDINGLY

CITY OF WACO
SOUTH 11TH STREET IMPROVEMENTS

SIDEWALK DETAILS

DESIGN: DLM
DRAWN: ECM
REVIEW: DLM
CP&Y: CWAC2200923
CLIENT:

SHEET
C822

PRINTED BY: emcdougald DATE: 4/12/2023
FILE PATH: G:\Projects\CWAC2200923-11th and Mary\08_Plans_Drawings\20_Sheets\2200923-C80-DETAILS.dwg, C822

G:\Projects\CWAC2200923-11th and Mary\08_Plans_Drawings\20_Sheets\2200923-C80-DETAILS.dwg, C822, 4/14/2023 2:58:59 PM, 1:1

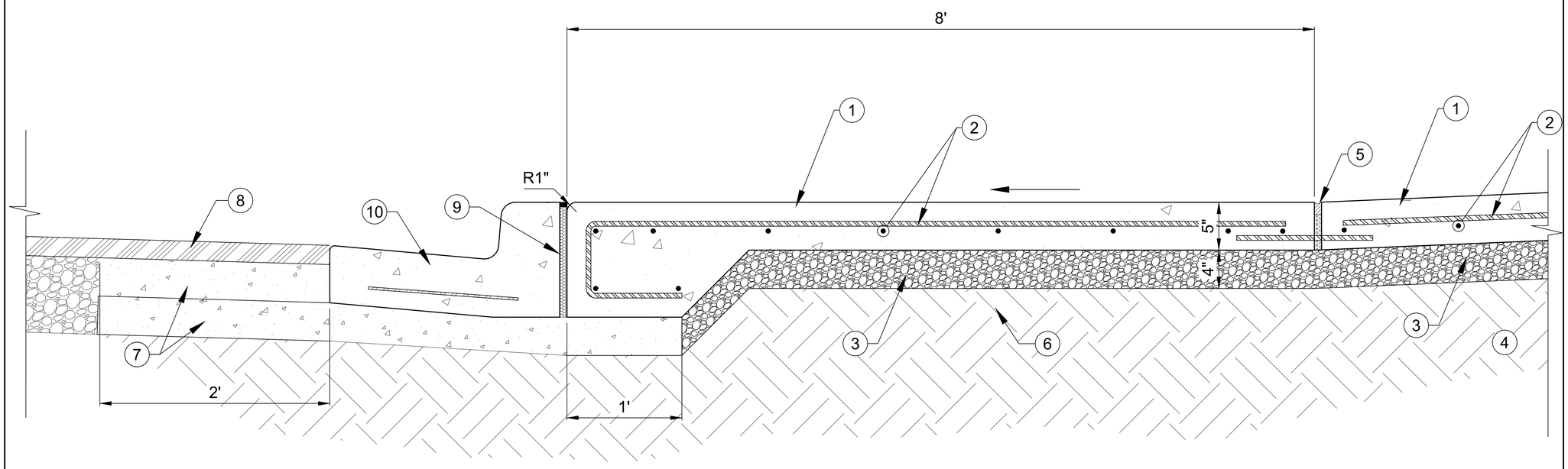

1. CONCRETE: TxDOT 421, CLASS 'A', SMOOTH BROOM FINISH
2. REINFORCEMENT: TxDOT 440, #4 @ 18" O.C.E.W. F_Y=60,000 PSI
3. 4 INCH BASE. TYPE "A" MATERIAL PER STANDARD SPECIFICATIONS FOR CONSTRUCTION SECTION 4.2 EXCAVATION AND BACKFILL PART 2: PRODUCT A. MATERIALS 3. TRENCH BACKFILL A & SPECIAL SPECIFICATION SP4.2-003. TYPE 'A' MATERIAL OR RECYCLED CRUSHED CONCRETE (TXDOT STANDARD SPECIFICATIONS FOR CONSTRUCTION ITEM 247 FLEXIBLE BASE TYPE D GRADE 1-2, EXCLUDING TYPE A MATERIAL, WITH MINIMUM P.I. OF FOUR) MECHANICALLY COMPACTED TO 95% OF THE MAXIMUM DRY DENSITY (TEX-113-E). DEFINED AS "CURB BACKFILL" IN SELECT DETAILS.
4. SELECT FILL AS NEEDED
5. EXPANSION JOINT, REINFORCEMENT, TxDOT 440, #5 BAR @ 18" O.C. F_Y=60,000 PSI, LENGTH = 24"
6. COMPACT EXISTING SUBGRADE TO A MINIMUM 95% OF ASTM D698 MAX DRY DENSITY WITHIN 0% TO +3% OPTIMUM MOISTURE CONTENT
7. CONCRETE: 2,000 PSI
8. HOT MIX ASPHALTIC CONCRETE: TxDOT ITEM 340, TYPE 'C'. THICKNESS: 2"
9. ISOLATION JOINT
10. REINFORCED CONCRETE CURB & GUTTER

NOTE:

1. SLOPE PER GRADING PLAN, 1.5% MAX AS FORMED

1 SIDEWALK SECTION E

SCALE : NTS

CP&Y, INC.
TEXAS REGISTERED ENGINEERING FIRM
TBPE F-1741

STATE OF TEXAS
DAVID L. MAREK
#83327
REGISTERED
PROFESSIONAL ENGINEER
4-14-2023

NO.	REVISION	BY	DATE

VERIFY SCALE 0 1"
BAR LENGTH EQUALS ONE INCH ON ORIGINAL DRAWING. VERIFY LENGTH ON THIS SHEET AND ADJUST SCALE ACCORDINGLY

CITY OF WACO
SOUTH 11TH STREET IMPROVEMENTS

SIDEWALK DETAILS

DESIGN: DLM
DRAWN: ECM
REVIEW: DLM
CP&Y: CWAC2200923
CLIENT:

SHEET
C823

PRINTED BY: emcdougald DATE: 4/12/2023
FILE PATH: G:\Projects\CWAC2200923-11th and Mary\08_Plans_Drawings\20_Sheets\2200923-C80-DETAILS.dwg, C823

G:\Projects\CWAC2200923-11th and Mary\08_Plans_Drawings\20_Sheets\2200923-C80-DETAILS.dwg, C823, 4/14/2023 2:59:00 PM, 1:1

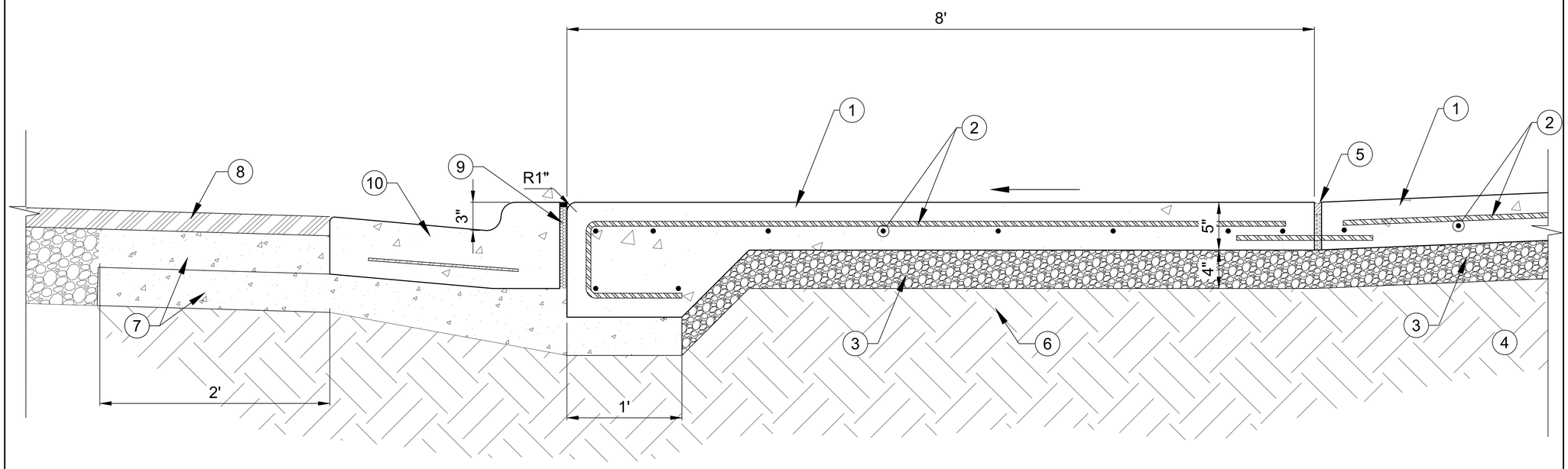

1. CONCRETE: TxDOT 421, CLASS 'A', SMOOTH BROOM FINISH
2. REINFORCEMENT: TxDOT 440, #4 @ 18" O.C.E.W. F_Y=60,000 PSI
3. 4 INCH BASE. TYPE "A" MATERIAL PER STANDARD SPECIFICATIONS FOR CONSTRUCTION SECTION 4.2 EXCAVATION AND BACKFILL PART 2: PRODUCT A. MATERIALS 3. TRENCH BACKFILL A & SPECIAL SPECIFICATION SP4.2-003. TYPE 'A' MATERIAL OR RECYCLED CRUSHED CONCRETE (TXDOT STANDARD SPECIFICATIONS FOR CONSTRUCTION ITEM 247 FLEXIBLE BASE TYPE D GRADE 1-2, EXCLUDING TYPE A MATERIAL, WITH MINIMUM P.I. OF FOUR) MECHANICALLY COMPACTED TO 95% OF THE MAXIMUM DRY DENSITY (TEX-113-E). DEFINED AS "CURB BACKFILL" IN SELECT DETAILS.
4. SELECT FILL AS NEEDED
5. EXPANSION JOINT, REINFORCEMENT, TxDOT 440, #5 BAR @ 18" O.C. F_Y=60,000 PSI, LENGTH = 24"
6. COMPACT EXISTING SUBGRADE TO A MINIMUM 95% OF ASTM D698 MAX DRY DENSITY WITHIN 0% TO +3% OPTIMUM MOISTURE CONTENT
7. CONCRETE: 2,000 PSI
8. HOT MIX ASPHALTIC CONCRETE: TxDOT ITEM 340, TYPE 'C'. THICKNESS: 2"
9. ISOLATION JOINT
10. REINFORCED CONCRETE 3" CURB & GUTTER

NOTE:

1. SLOPE PER GRADING PLAN, 1.5% MAX AS FORMED

1 SIDEWALK SECTION F

SCALE : NTS

CP&Y, INC.
TEXAS REGISTERED ENGINEERING FIRM
TBPE F-1741

STATE OF TEXAS
DAVID L. MAREK
#83327
REGISTERED
PROFESSIONAL ENGINEER
4-14-2023

NO.	REVISION	BY	DATE

VERIFY SCALE 0 1"
BAR LENGTH EQUALS ONE INCH ON ORIGINAL DRAWING. VERIFY LENGTH ON THIS SHEET AND ADJUST SCALE ACCORDINGLY

CITY OF WACO
SOUTH 11TH STREET IMPROVEMENTS

SIDEWALK DETAILS

DESIGN: DLM
DRAWN: ECM
REVIEW: DLM
CP&Y: CWAC2200923
CLIENT:

SHEET
C824

PRINTED BY: emcdougald DATE: 4/12/2023
FILE PATH: G:\Projects\CWAC2200923-11th and Mary\08_Plans_Drawings\20_Sheets\2200923-C80-DETAILS.dwg, C824

G:\Projects\CWAC2200923-11th and Mary\08_Plans_Drawings\20_Sheets\2200923-C80-DETAILS.dwg, C824, 4/14/2023 2:59:01 PM, 1:1

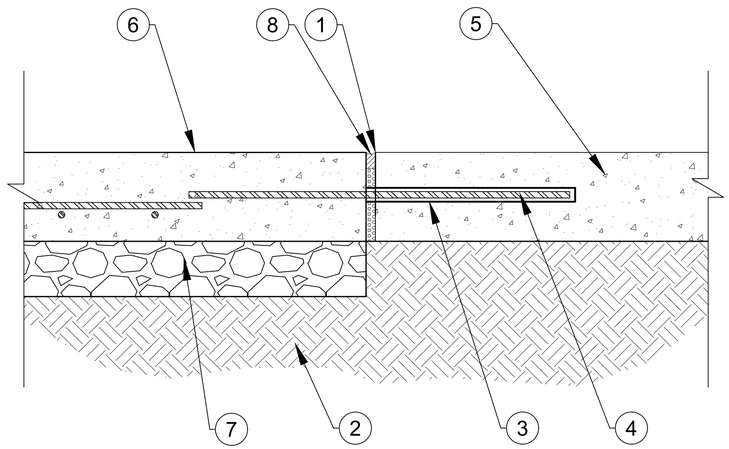

1. CONTRACTOR TO SAW CUT EXISTING CONCRETE PAVEMENT IN SMOOTH, STRAIGHT LINE.
2. REINFORCEMENT: TxDOT 440, #5 DOWEL (SMOOTH) LENGTH: 24", F_Y =60,000 PSI
3. CONTRACTOR TO DRILL 3/4" Ø HOLE IN EXISTING CONCRETE. USE AIR TO REMOVE DUST FROM DRILLED HOLE.
4. CONTRACTOR TO EPOXY GROUT # 5 DOWEL INTO DRILLED HOLE.
5. EXISTING CONCRETE FLATWORK
6. PROPOSED CONCRETE FLATWORK
7. 4 INCH BASE. TYPE "A" MATERIAL PER STANDARD SPECIFICATIONS FOR CONSTRUCTION SECTION 4.2 EXCAVATION AND BACKFILL PART 2: PRODUCT A. MATERIALS 3. TRENCH BACKFILL A & SPECIAL SPECIFICATION SP4.2-003. TYPE 'A' MATERIAL OR RECYCLED CRUSHED CONCRETE (TXDOT STANDARD SPECIFICATIONS FOR CONSTRUCTION ITEM 247 FLEXIBLE BASE TYPE D GRADE 1-2, EXCLUDING TYPE A MATERIAL, WITH MINIMUM P.I. OF FOUR) MECHANICALLY COMPACTED TO 95% OF THE MAXIMUM DRY DENSITY (TEX-113-E). DEFINED AS "CURB BACKFILL" IN SELECT DETAILS.
8. EXPANSION JOINT, REINFORCEMENT, TxDOT 440, #5 BAR @ 18" O.C. F_Y=60,000 PSI, LENGTH = 24"

1 CONN. TO EXIST. FLATWORK

SCALE : NTS

CP&Y, INC.
TEXAS REGISTERED ENGINEERING FIRM
TBPE F-1741

STATE OF TEXAS
DAVID L. MAREK
#83327
REGISTERED
PROFESSIONAL ENGINEER
4-14-2023

NO.	REVISION	BY	DATE

VERIFY SCALE 0 1"
BAR LENGTH EQUALS ONE INCH ON ORIGINAL DRAWING. VERIFY LENGTH ON THIS SHEET AND ADJUST SCALE ACCORDINGLY

CITY OF WACO
SOUTH 11TH STREET IMPROVEMENTS

SIDEWALK DETAILS

DESIGN: DLM
DRAWN: ECM
REVIEW: DLM
CP&Y: CWAC2200923
CLIENT:

SHEET
C825

PRINTED BY: emcdougald DATE: 4/12/2023
FILE PATH: G:\Projects\CWAC2200923-11th and Mary\08_Plans_Drawings\20_Sheets\2200923-C80-DETAILS.dwg, C825

G:\Projects\CWAC2200923-11th and Mary\08_Plans_Drawings\20_Sheets\2200923-C80-DETAILS.dwg, C825, 4/12/2023 11:2:32 PM, 1:1

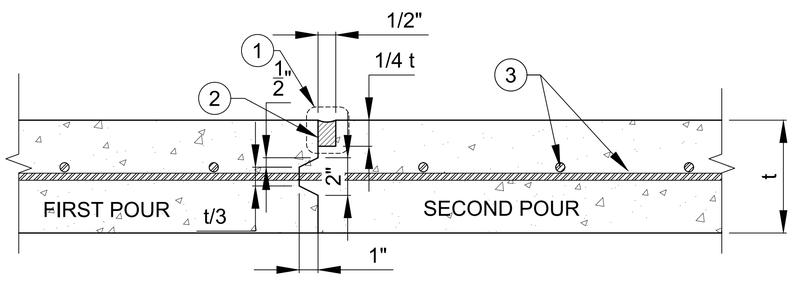

1 TYPICAL JOINT SEAL

2 VERTICAL SAW CUT

3 REINFORCING AS SPECIFIED

NOTE:
CONTRACTOR SHALL PROTECT KEYWAY PRIOR TO SECOND POUR. IF LONGITUDINAL KEYWAY IS DAMAGED, CONTRACTOR SHALL REPAIR WITH USE OF LONGITUDINAL BUTT JOINT. DRILL AND GROUT DOWELS INTO FIRST POUR.

t = THICKNESS OF SLAB

1 CONSTRUCTION JOINT DETAIL

SCALE : NTS

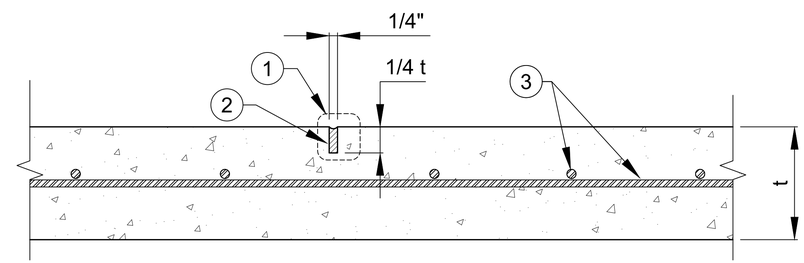

1 TYPICAL JOINT SEAL

2 VERTICAL SAW CUT

3 REINFORCING AS SPECIFIED

NOTE:
CONTRACTOR SHALL SAWCUT JOINT AS SOON AS CONCRETE CAN ACCEPT WEIGHT.

t = THICKNESS OF SLAB

2 CONTROL JOINT DETAIL

SCALE : NTS

CP&Y, INC.
TEXAS REGISTERED ENGINEERING FIRM
TBPE F-1741

STATE OF TEXAS
DAVID L. MAREK
#83327
REGISTERED
PROFESSIONAL ENGINEER
4-14-2023

NO.	REVISION	BY	DATE

VERIFY SCALE 0 1"
BAR LENGTH EQUALS ONE INCH ON ORIGINAL DRAWING. VERIFY LENGTH ON THIS SHEET AND ADJUST SCALE ACCORDINGLY

CITY OF WACO
SOUTH 11TH STREET IMPROVEMENTS

JOINT DETAILS

DESIGN: DLM
DRAWN: ECM
REVIEW: DLM
CP&Y: CWAC2200923
CLIENT:

SHEET
C826

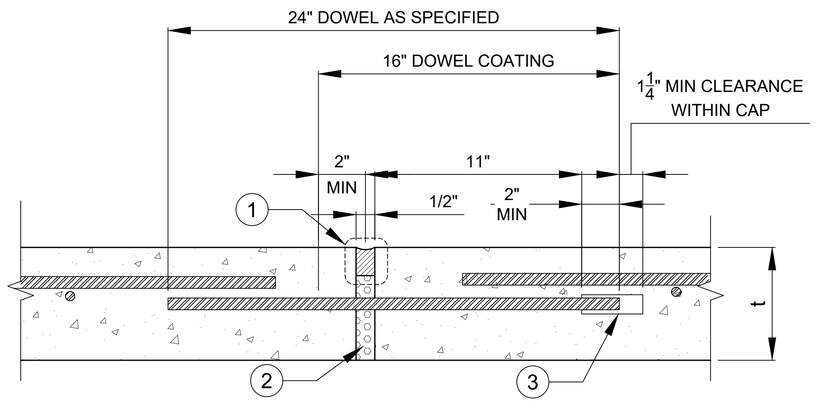

1. TYPICAL JOINT SEAL
2. NON EXTRUDING PREMOLDED COMPRESSIBLE MATERIAL, REDWOOD OR APPROVED EQUAL
3. CLOSED DOWEL SLEEVE TO FIT DOWEL @ BE SECURED. INSTALLED AS SPECIFIED

NOTE:
1. DOWELS @ REINF. BARS SHOULD BE SUPPORTED ON AN APPROVED DEVICE & MUST BE TIED OR CHAIRED ON EACH SIDE
2. DOWELS MUST BE PERPENDICULAR TO FACE OF CONCRETE
3. 16" DOWEL COATING TO CONSIST OF HEAVY GREASE OR BOND BREAKER

t = THICKNESS OF SLAB

1 EXPANSION JOINT DETAIL

SCALE : NTS

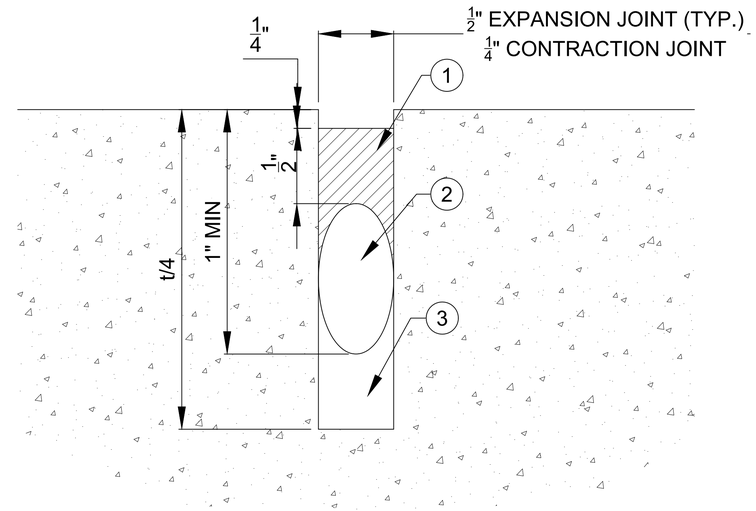

1. JOINT SEALENT: W R MEADOWS, SELF LEVELING, LOW MODULUS POURTHANE SL OR APPROVED EQUAL.
2. BACKER ROD, COMPATIBLE WITH THE CLASS OF SEALANT.
3. VOID SPACE.

NOTE:
1. t = THICKNESS OF SLAB

2 TYPICAL JOINT SEAL

SCALE : NTS

CP&Y, INC.
TEXAS REGISTERED ENGINEERING FIRM
TBPE F-1741

STATE OF TEXAS
DAVID L. MAREK
#83327
REGISTERED
PROFESSIONAL ENGINEER
4-14-2023

NO.	REVISION	BY	DATE

VERIFY SCALE 0 1"
BAR LENGTH EQUALS ONE INCH ON ORIGINAL DRAWING. VERIFY LENGTH ON THIS SHEET AND ADJUST SCALE ACCORDINGLY

CITY OF WACO
SOUTH 11TH STREET IMPROVEMENTS

JOINT DETAILS

DESIGN: DLM
DRAWN: ECM
REVIEW: DLM
CP&Y: CWAC2200923
CLIENT:

SHEET
C827

PRINTED BY: emcdougald DATE: 4/12/2023
FILE PATH: G:\Projects\CWAC2200923-11th and Mary\08_Plans_Drawings\20_Sheets\2200923-C80-DETAILS.dwg, C827

G:\Projects\CWAC2200923-11th and Mary\08_Plans_Drawings\20_Sheets\2200923-C80-DETAILS.dwg, C827, 4/12/2023 11:12:34 PM, 1:1