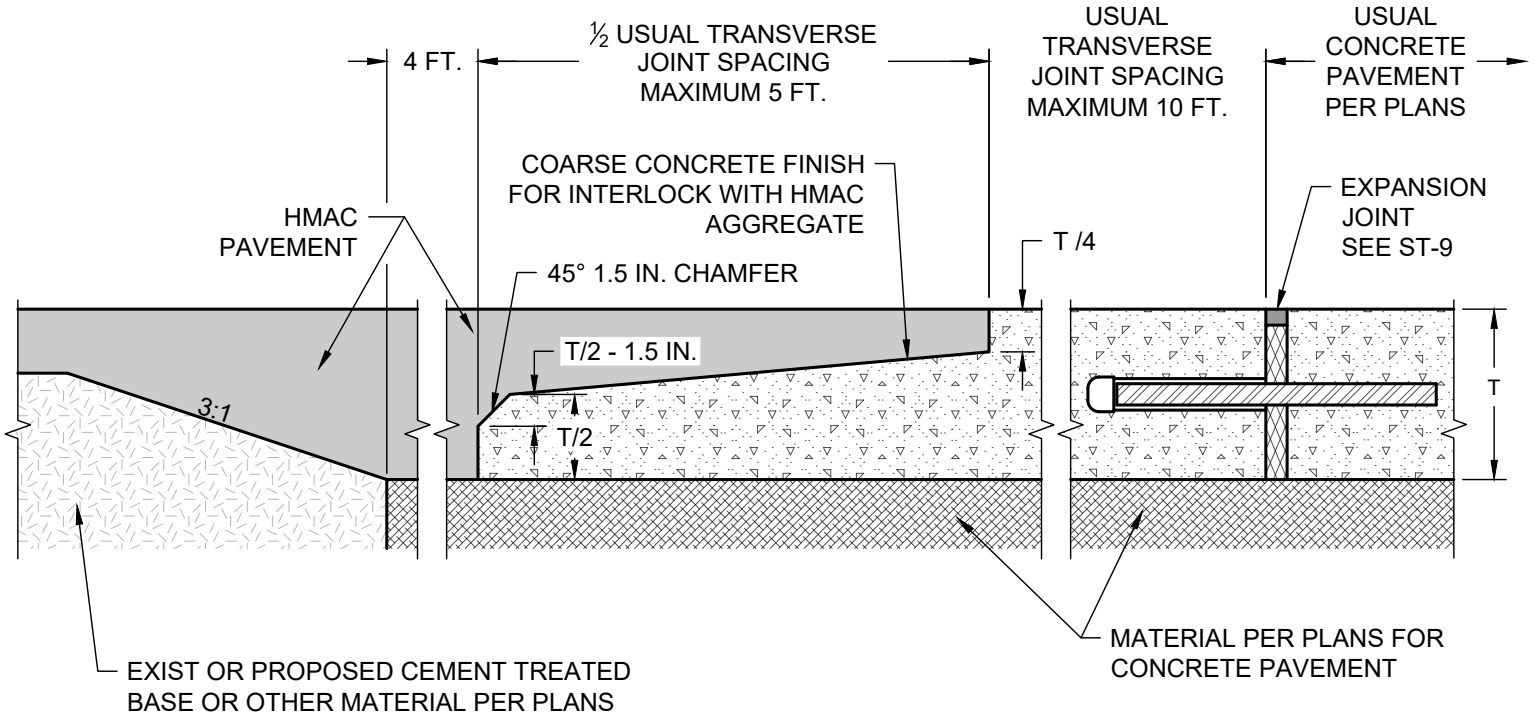

NOTES:

1. CONCRETE TRANSITION PANEL SHALL BE CONSTRUCTED IN ACCORDANCE WITH CONCRETE PAVEMENT DETAILS SHOWN IN PLANS WITH REINFORCING STEEL TERMINATING WHERE 2 IN. CLEAR COVER CANNOT BE ACHIEVED.
2. PAYMENT FOR CONCRETE TRANSITION PANEL SHALL BE PER CONCRETE PAVEMENT OF THE THICKNESS DIMENSION T.

CONCRETE PAVEMENT TO ASPHALT PAVEMENT TRANSITION PANEL

(NO SCALE)

CITY OF WACO

ENGINEERING DIVISION

DISCLAIMER: THE USE OF THIS STANDARD IS GOVERNED BY THE "TEXAS ENGINEERING PRACTICE ACT". NO WARRANTY OF ANY KIND IS MADE BY THE CITY OF WACO FOR ANY PURPOSE WHATSOEVER. THE CITY OF WACO ASSUMES NO RESPONSIBILITY FOR THE CONVERSION OF THIS STANDARD TO OTHER FORMATS OR FOR INCORRECT RESULTS OR DAMAGES RESULTING FROM ITS USE.

REVISIONS

NO.	COMMENTS	BY	DATE
##	DESCRIPTION	FL	MM/DD/YYYY

DATE 04/19/2024

ST-40